RM of Corman Park – Phase 1 – Background Report

South Area Development Plan

November 28, 2023

Prepared for:

RM of Corman Park

Prepared by:

Stantec Consulting Ltd.

Rev	Description	Author(s)		Quality Check		Independent Review	
00	Issued for Acceptance	E. Reekie S. Segal E. Harms N. Kearns G. Michaud	July 12, 2023	K. Godwin	July 13, 2023	A. Conway	July 14, 2023
01	Issued to Client	E. Reekie S. Segal E. Harms N. Kearns G. Michaud	November 15, 2023	K. Godwin	November 24, 2023	A. Conway	November 28, 2023

This document entitled RM of Corman Park – Phase 1 – Background Report was prepared by Stantec Consulting Ltd. ("Stantec") for the account of The RM of Corman Park (the "Client"). Any reliance on this document by any third party is strictly prohibited. The material in it reflects Stantec's professional judgment in light of the scope, schedule and other limitations stated in the document and in the contract between Stantec and the Client. The opinions in the document are based on conditions and information existing at the time the document was published and do not take into account any subsequent changes. In preparing the document, Stantec did not verify information supplied to it by others. Any use which a third party makes of this document is the responsibility of such third party. Such third party agrees that Stantec shall not be responsible for costs or damages of any kind, if any, suffered by it or any other third party as a result of decisions made or actions taken based on this document.

Reviewed by _____
(signature)

Katherine Godwin, P.Eng., MBA

2023.11.28
10:43:20
-06'00'

Approved by _____
(signature)

Amanda Conway, P.Eng.

Table of Contents

INTRODUCTION 3

1.0 GROUNDWATER STUDY 3
1.1 REFERENCED INFORMATION 4
1.2 REGIONAL GEOLOGY AND HYDROSTRATIGRAPHY 6
1.2.1 Regional Geology 6
1.2.2 Regional Hydrostratigraphy 8
1.2.3 Potential for Hydraulic Connections with Deeper Aquifers 14
1.2.4 Hydraulic Properties of Local Shallow Aquifers 14
1.2.5 Non-domestic Pumping Wells within the Study Area 15
1.2.6 Existing Groundwater Monitoring Wells Within the Study Area 15
1.2.7 Potential Annual Variability of Groundwater Levels 16
1.2.8 Recommended Groundwater Monitoring Wells 17
1.2.9 Amount of Additional Water Being Discharged 17
1.2.10 Summary 18

2.0 POTABLE WATER 20
2.1 REFERENCE INFORMATION 20
2.2 POTABLE WATER UTILITIES 21
2.3 RURAL WATER UTILITIES 21
2.3.1 SaskWater 23
2.3.2 DRWU Pipeline Network 23
2.3.3 Other Potable Water Suppliers 24
2.4 WATER SUPPLY WELLS 24

3.0 WASTEWATER 25
3.1 REFERENCE INFORMATION 25
3.2 EXISTING INFRASTRUCTURE 25
3.3 NITRATE LOADING - EXISTING SHA PRIVATE SEWAGE PERMITS 26

4.0 DRAINAGE AND STORMWATER 27
4.1 REFERENCE INFORMATION 27
4.2 WATERSHED CHARACTERISTICS 28
4.2.1 AGRICULTURAL DRAINAGE 29
4.3 DRAINAGE INFRASTRUCTURE 30
4.3.1 Bridges 30
4.3.2 Culverts 31
4.4 DITCH DRAINAGE DIRECTIONS 32

4.5 STORMWATER SERVICING 32

5.0 NATURAL AREA SCREENING 33
5.1 REFERENCED INFORMATION 34
5.2 METHODS AND RESULTS 34
5.2.1 Wetlands 35
5.2.2 Landcover Composition 35
5.2.3 Species of Conservation Concern 35
5.2.4 Special Land Designations 35
5.2.5 Heritage Resources 35
5.3 DISCUSSION AND RECOMMENDATIONS 36
5.3.1 Biophysical Resources 36
5.3.2 Heritage Resources 37

6.0 TRANSPORTATION 38
6.1 REFERENCE INFORMATION 38
6.2 ROADWAY CONDITION ASSESSMENT 38
6.3 ROADWAY CLASSIFICATION 40

7.0 SHALLOW UTILITIES 45
7.1 EXISTING SHALLOW UTILITY INFRASTRUCTURE 45

8.0 ISSUES IDENTIFICATION 46

LIST OF TABLES

Table 1-1 – Drift Stratigraphy of the Development Area (MDH, 2011) 8
Table 1-2 – Hydrostratigraphic Units in Study Area 9
Table 2-1 – Study Area Potable Water Supply – Existing Developments 21
Table 4-1 – Study Area Watershed Characteristics 29
Table 4-2 – Stormwater Management within the SADP – Existing Developments* 33
Table 6-1 – Road Condition Criteria Weighting 39
Table 6-2 – Existing ADT 40
Table 6-3 – 2023 ADT 41
Table 6-4 – Roadway Classification Criteria 44
Table 8-1 - Issue Identification 46

LIST OF FIGURES

Figure 4-1 – Drainage Run on Section 03-36-04 W3M 30
Figure 4-2 – Bridge Locations 31

INTRODUCTION

The southeastern portion of the R.M of Corman Park (Study Area) has experienced significant growth in the last few years. The RM of Corman Park (RM) has retained Stantec Consulting Ltd. (Stantec) to undertake a background study for the South Area Development Plan (SADP) area.

The project area is defined by the following boundaries as shown in Figure A.0.1 Project Boundaries located in Appendix A.0. The overall SADP study area is shown in red on Figure A.0.1 and it is approximately 24,643 ha of land located south of the City of Saskatoon, within the RM of Corman Park. Please note the different study boundaries based on each discipline's technical requirements provided by the RM in Figure A.0.1. The wastewater Study Area outlined in orange on Figure A.0.1 is 16,143 ha and the groundwater, natural area screening, potable water, shallow utilities, and transportation Study Area is outlined in blue on Figure 1 is 23,076 ha.

The purpose of this report is to document the findings of the background study, which has been completed as part of a desktop review of available information and field reconnaissance including survey of culverts at sectional junctions, collection of traffic data at twenty intersections, and visual inspection of condition of all roadways within the Study Area. It provides a general inventory of the existing conditions, and constraints, along with mitigation with respect to groundwater, potable water, wastewater, drainage, the natural environment, transportation and shallow utilities infrastructure.

This background study lays the foundation for effective and sustainable development within the designated Study Area. By assessing the existing natural conditions and infrastructure, this study enables informed decision-making and ensures the implementation of appropriate strategies for future development initiatives.

1.0 GROUNDWATER STUDY

The groundwater Study Area consisted of 93 sections of land within the RM of Corman Park, as illustrated Figure A1 of the Technical memo, included Appendix A.1. The objective (s) of the groundwater study was to characterize the surficial aquifers within the Study Area, including their extents, hydrogeologic properties, current usage rate and discuss the potential for connection with deeper aquifers, where possible. A secondary objective was to identify data gaps and areas that required further assessments to meet the aforementioned objectives.

The Groundwater Study includes the following scope of work:

- Identify the extents of the surficial aquifer(s) in the Study Area (if possible).

- Discuss the potential for hydraulic connections with deeper aquifers (if possible).
- Using the Water Security Agency database, identify non-domestic pumping wells within the Study Area and indicate the source of their water, and the expected regional groundwater flow directions within the aquifer(s).
- Tabulate and map the locations of existing groundwater monitoring wells and the most recent groundwater levels, and groundwater chemistry (nutrients and chloride) results, if information is available.
- Discuss the hydraulic properties of the local shallow aquifers based on review of publicly available information.
- Discuss the potential annual variability of the groundwater levels within the surficial aquifers.
- Determine potential locations for any additional recommended groundwater monitoring wells.
- Estimate and illustrate the amount of additional water being discharged into the surficial aquifer(s) from either local supply of piped potable water and/or deeper wells from nearby sewage systems (if possible).

1.1 REFERENCED INFORMATION

The following guidelines, Comprehensive Development Review Reports (CDR) reports and publicly available information was referenced during the groundwater study:

- AECOM Canada Ltd. (AECOM). 2011. Applewood Estates Comprehensive Development Review.
- AECOM. 2016. Meadow Ridge Estates Comprehensive Development Review.
- Alberta Environment and Parks (AEP). 2022. Alberta Tier 2 Soil and Groundwater Remediation Guidelines.
- Blackstone Land and Cattle Ltd. (Blackstone Land and Cattle). 2013. Draft Comprehensive Development Review – The Village at Crossmount.
- Crosby Hanna & Associates. 2018. Final Comprehensive Development Review – Edgemont Park Estates.
- Crosby Hanna & Associates. 2021. Comprehensive Development Review - 1022068225 Saskatchewan Corp.
- Fortin, G., van der Kamp, G., Cherry, J. A. 1991. Hydrogeology and Hydrochemistry of an Aquifer-Aquitard System within Glacial Deposits, Saskatchewan, Canada. Journal of Hydrology, 126, 265-292.

- Freeze, R. A., Cherry, J. A. 1979. Groundwater. Prentice-Hall, Inc., Englewood Cliffs, New Jersey 07632.
- Health Canada. 2021. Federal Contaminated Site Risk Assessment in Canada Part I: Guidance on Human Health Preliminary Quantitative Risk Assessment (PQRA), Version 2.0.
- Health Canada. 2022. Guidelines for Canadian Drinking Water Quality.
- K & K Land Management and Urban Elements Development Corp. 2012. Comprehensive Development Review – Grasswood Estates.
- Ken and Wendy Bernhard. 2015. Draft Comprehensive Development Review – Bernhard Residential Development.
- Klappsteina, G. and Rostron, B. 2014. Shallow hydrogeological and hydrochemical characterization of the Aquistore CO2 sequestration site in Estevan, Saskatchewan, Canada. Energy Procedia, 63, 4971-4976.
- McMartin, D. W., Gillies, J. A., Sloan, M. J. 2001. Impact of Irrigation with Poor Quality Groundwater on Saskatchewan Soils. Canadian Water Resources Journal, 26, 71-90.
- MDH Engineered Solutions (MDH). 2011a. Hydrogeology Mapping of NTS Mapsheet Saskatoon 73B.
- MDH. 2011b. Interpreted Thickness and Areal Limits of the Bearpaw Formation Ardkenneth Member (Kba) 73B NTS Mapsheet.
- Mollahosseini, A. and Abdelrasoul, A. 2019. Recent Advances in Thin Film Composites Membranes for Brackish Groundwater Treatment with Critical Focus on Saskatchewan Water Sources. Journal of Environmental Science, 81, 181-194.
- Ravenswood Blackstone Investment. 2021. Ravenswood Comprehensive Development Review.
- Saskatchewan Ministry of Environment (SKMOE). 2016. Endpoint Selection Standard, Saskatchewan Environmental Code.
- U.S. Army Corps of Engineers (USACE). 1999. Groundwater Hydrogeology.
- Water Security Agency (WSA). 2023a. https://www.wsask.ca/mapsheet/saskatoon-mapsheet-73b/, accessed on June 16, 2023.
- WSA. 2023b. https://www.wsask.ca/wells/wsa-goodale-farm-009/, accessed on June 16, 2023.

- WSA. 2023c. Water Security Agency of Saskatchewan (WSASK) Online Water Well Database Portal. https://gis.wsask.ca/Html5Viewer/index.html?viewer=WaterWells.WellsViewer/. Accessed on June 9, 2023.
- Whitewater Holdings Ltd. (Whitewater Holdings). 2014. Comprehensive Development – Tuscan Ridge Estates.

1.2 REGIONAL GEOLOGY AND HYDROSTRATIGRAPHY

The following section discusses the regional geology and hydrostratigraphy in the Study Area. Figures illustrating various formations/aquifers are included in Figures A2 through A12 of the Technical Memo included in Appendix A.1.

1.2.1 Regional Geology

Bedrock deposits in the Study Area include the Lea Park Formation and the Upper Colorado Group, Judith River and Bearpaw Formations and Tertiary – Quaternary sediments of the Saskatoon and Sutherland Groups (Christiansen, 1979). These are described below:

The Upper Cretaceous Lea Park Formation and the Upper Colorado Group comprises 60-300 m of gray, non-calcareous, marine silt and clay (shale) which becomes sandier as it approaches the overlying Judith River Formation. The Lea Park Formation shale constitutes the base of “freshwater” exploration associated with the shallow hydrostratigraphy in the region and is a known marker horizon for most of southern Saskatchewan (MDH Engineering Solutions Corp. (MDH) 2011). This designation is largely due to the presence of brackish water in the deeper horizons.

The Judith River Formation, where present is a deltaic sediment which extends eastward into the marine deposits and, is composed of up to 61 m of nonmarine, interbedded fine-grained sand, silt and clay (as shale). The eastern part of the Formation is less sandy suggesting that the Judith River delta did not extend very far eastward beyond the 73B (Saskatoon) map area (MDH,2011).

The Bearpaw formation includes up to 122 m of marine, noncalcareous silt and clay with a 12 m marine sand bed which occurs 76 m above the base of the formation. The Bearpaw Formation is the uppermost bedrock unit in the region conformably overlying the Judith River Formation (MDH 2011).

Over the past two million years, Saskatchewan has undergone at least eight and up to ten periods of significant glacial advance with the final deglaciation occurring between 17,000 and 10,000 years ago (Christiansen, 1979). This has resulted in a complex arrangement of proglacial and glacial sediments which are interbedded with non-glacial stratified sediments (fluvial, deltaic, lacustrine, aeolian, etc.) deposited between glaciations and during interstadial deglaciation. Erosional valleys produced during interglacial periods commonly intersect preglacial valleys (MDH 2011) These glaciofluvial, fluvial, alluvial

and colluvial sediments, deposited during preglacial and interglacial periods in the valleys were covered by tills during the final stages of glaciation, forming deep buried valley aquifer systems that are flanked by more regionally extensive blanket aquifer systems which form the most significant freshwater aquifers in the province.

Glacial deposits in this area are divided into the Empress Group, Sutherland Group, Floral and Battleford Formations, Surficial Stratified Drift and Alluvium and are characterized as follows:

Stratified preglacial sediments deposited between the bedrock surface and the glacial sediments are formally called the Empress Group (Whitaker and Christiansen 1972). The Empress Group is composed of sand and gravel with a few till, silt or clay interbeds lying between bedrock and till and includes both glacial and preglacial sediments deposited in preglacial valleys. The Empress group in this area is confined mainly to bedrock valleys and glacially eroded depressions in the bedrock surface.

The Sutherland Group, which includes the Mennon, Dundurn and Warman Formations, comprises up to 122 m of till and minor amounts of stratified drift and is commonly gypsiferous.

The Saskatoon Group includes the Floral and Battleford Formations and Surficial Stratified Deposits.

The Floral Formation is composed mainly of till and silt, sand and gravel. Most of the stratified drift occurs in the basal part of the formation and constitutes one of the main occurrences of groundwater in the area.

The Battleford Formation comprises soft, unjointed and unstained till which, in some areas, includes a harder lower till. The contact between the Battleford Formation and the underlying Floral Formation is commonly marked by a well-developed boulder pavement believed to have been deposited by the glacier that deposited the Battleford Formation.

The Surficial Stratified drift includes a lower, lacustrine silt and clay and an upper deltaic sand and silt. Melting of the last glacial deposited this till plain characterized by hummocky topography of kettles and eskers, covered with glacial and glaciofluvial/glaciolacustrine deposits. Within the region, surficial deposits largely comprise colluvial, morainal plain and glaciofluvial hummocky (MDH 2011).

The stratigraphic details of the drift formations are presented in Table1-1 below.

Table 1-1 – Drift Stratigraphy of the Development Area (MDH, 2011)

STRATIGRAPHY			LITHOLOGY		HYDROGEOLOGY
GROUP	FORMATION	UNIT OR MEMBER			
Saskatoon	Surficial Stratified Deposits	Alluvium	Silt, Sand, Gravel	Clay, Silt, Sand	Surficial Aquifer/Aquitard
			Silt, Sand, Gravel	Clay, Silt, Sand	
		Haultain	Silt, Sand, Gravel	Clay, Silt, Sand	
			Silt, Sand, Gravel	Clay, Silt, Sand	
	Battleford		Till		Aquitard
			Gravel, Sand, Silt, Clay		Battleford Aquifer
	Floral	Upper	Till		Aquitard
		Riddell (Middle)	Gravel, Sand		Upper Floral Aquifer
		Lower	Till		Aquitard
			Gravel, Sand, Silt, Clay		Lower Floral Aquifer
			Till		Aquitard
Sutherland	Warman		Till		Aquitard
		0.64	Gravel, Sand, Silt, Clay		Warman Aquifer
	Dundurn	Upper	Till		Aquitard
		0.70	Gravel, Sand, Silt, Clay		Upper Dundurn Aquifer
		Lower	Till		Aquitard
			Gravel, Sand, Silt, Clay		Lower Dundurn Aquifer
		0.78	Till		Aquitard
	Mennon	Upper	Till		Aquitard
			Gravel, Sand, Silt, Clay		Mennon Aquifer
		Lower	Till		Aquitard
Empress		Upper	Gravel, Sand, Silt, Clay (Proglacial)		Empress Group Aquifer
		Lower	Chert and Quartzite Sand on Gravel (Preglacial)		

1.2.2 Regional Hydrostratigraphy

Bedrock silts sands gravels and preglacial valley fill sediments form the major freshwater aquifers across Saskatchewan (MDH 2011). Groundwater typically occurs in the Judith River Formation, in a Bearpaw sand, in the Empress Group, in the Floral Sand and Gravel and in the Surficial Sand (Christiansen, 1979). In MDH (2011), seven hydrostratigraphic units were identified (MDH 2011) in the Saskatoon Area. These are included in Table1-2, below.

Table 1-2 – Hydrostratigraphic Units in Study Area

Hydrostratigraphic Unit	Hydraulic Behaviour	Lithology	Conductivity Range (metre per second (m/s))
Surficial Stratified Deposits	Aquifer / Aquitard	Gravel Sand Silt Clay	>5 x 10^{-4} 10^{-7} to 10^{-3} 10^{-7} to 10^{-6} 10^{-11} to 10^{-6}
Saskatoon Group Till Sutherland Group Till Bearpaw Formation Shale Lea Park Formation Shale	Poor Aquitard / Aquitard	Till Till Silt and Clay Silt and Clay	10^{-11} to 10^{-6} 10^{-11} to 10^{-10} 10^{-12} to 10^{-8} 10^{-10} to 10^{-12}
Saskatoon Group Aquifers	Aquifer	Gravel and Sand Gravel Sand, Silt, Clay	10^{-6} to 10^{-3} 10^{-6} to 10^{-4}
Sutherland Group Aquifers	Aquifer	Gravel & Sand Gravel, Sand, Silt, Clay	10^{-5} to 10^{-3} 10^{-8} to 10^{-3}
Empress Group Aquifer	Aquifer	Gravel & Sand Gravel, Sand, Silt, Clay	10^{-5} to 10^{-3} 10^{-9} to 10^{-3}
Bearpaw Formation Sands	Aquifer	Sand & Silt Sand, Silt, Clay	10^{-5} 10^{-4} to 10^{-9}
Judith River Formation	Aquifer	Sand & Silt	10^{-6} to 10^{-5}
SOURCE: MDH 2011.			

Judith River Aquifer

The Judith River Formation forms a major aquifer (the Judith River Aquifer) in Saskatchewan. It is laterally discontinuous due to extensive faulting is not commonly accessed for use as a freshwater resource as its waters are highly mineralized and there are typically shallower aquifers which are more readily accessible. Groundwater flow is interpreted to be towards the South Saskatchewan River and can be strongly influenced by flow and water development within the deep Empress Group Aquifers where they incise the Judith River Aquifer. Within the region, the aquifer thickness ranges between 18.5 m and 38 m. Bulk hydraulic conductivity reportedly ranges between 1.9 x 10^{-6} m/s to 1.7 x 10^{-5} m/s, averaging 7.1 x 10^{-6} m/s (MDH, 2011). The vulnerability to contamination from the surface is considered to be low to very low, except in places where this formation is encountered near surface or where thick overlying aquifer units are present.

Water from the Judith River Aquifer is predominantly characterized as sodium-sulphate type water but ranges between sodium- and/or calcium-bicarbonate to sodium-chloride type water. Groundwater generally exceeds the Canadian Council for Ministers of the Environment (CCME) objectives for sodium and sulphate. The objective for chloride is also periodically exceeded. Water in this unit is generally not suitable for human consumption, irrigation or livestock watering without treatment. In the Study Area, the Judith River Aquifer is present throughout the Study Area (Figure A12 of the Technical Memo).

The Ardkenneth Aquifer (Bearpaw Formation)

The Ardkenneth Member of the Bearpaw Formation comprises unoxidized, generally silty, very fine- to fine-grained sand with some interbedded silts and clays (MDH, 2011). It is limited in areal extent and discontinuous in the Study Area (Figure A11 of the Technical Memo). It is present at depths between 46.9 m and 158.5 m below grade and is generally 15 m to 25 m thick. Bulk hydraulic conductivity has been estimated to be between 10^{-6} m/s and 10^{-4} m/s (MDH, 2011). Information on groundwater flow is limited but is likely toward the South Saskatchewan River and may be locally complex where there is structure introduced by salt dissolution collapse. The aquifer is not considered to be vulnerable to contamination form the surface.

MDH (2011) notes that there were no third party reports available regarding groundwater availability from the Ardkenneth Aquifer. Only two wells are interpreted to be installed into this unit and pumping tests were not successful. Therefore, it is not a recommended target for water supply. Based on the limited information available, the groundwater is sodium-sulphate type water, exceeding the CCME drinking water quality objectives for both sodium and sulphate and the aesthetic objective for chloride. It is generally not considered suitable for human consumption nor for irrigation or livestock watering without treatment.

The Cruikshank Aquifer (Bearpaw Formation)

The Cruikshank Member of the Bearpaw Formation comprises unoxidized, silty, very fine- to fine-grained sand with some interbedded silts and clays (MDH, 2011). It is limited in areal extent and discontinuous in the Study Area (Figure A11 of the Technical Memo) and present in association with down faulting associated with salt dissolution collapse structures. It is present at depths between 51 m and 100.6 m below grade and is generally between 9 m to 22.6 m thick. Bulk hydraulic conductivity data was not available for the Cruikshank aquifer but is anticipated to be similar to the Ardkenneth Aquifer. Information on groundwater flow is not available but lateral flow would be influenced by the groundwater flow in the overlying and underlying stratified deposits The aquifer is not considered to be vulnerable to contamination form the surface.

MDH (2011) notes that there were no third party reports available regarding groundwater availability from the Cruikshank Aquifer. Due to its limited areal extent; however, it should not be targeted for water supply.

Empress Group Aquifer

Sands and gravels of the Empress Group infill portions of pre-glacial valleys and form some of the largest freshwater aquifer systems in the province. The Empress Group Aquifer is present in a limited area on the eastern side of the Study area as the Meacham Aquifer. It is specifically located in Sections 25, 35, and 36-35-04-W3M, N1/2-24-35-04-W3M, E1/2-26-35-04-W3M, S1/2-01-36-03-W3M, and SE-02-36-03-W3M (Figure A10 of Technical Memo). The Empress Group Aquifer is commonly exploited for industrial, municipal and domestic water use. Bulk hydraulic conductivities generally range between 10^{-5} m/s and 10^{-4} m/s.

Groundwater is recharged by downward flow through overlying strata and lateral flow from interconnected aquifers, including the Judith River aquifer (MDH, 2011). Vertical flow is significantly less than lateral groundwater flow and vertical recharge is slow due to the presence of thick, low permeability confining layers (till and marine shales). Lateral groundwater flow in the Meacham Aquifer is east-southeasterly toward the Hatfield Valley Aquifer system. Groundwater is generally sodium-sulphate type water and not considered to be potable without treatment.

The Mennon Aquifer (Sutherland Group)

The Mennon aquifer is present in the northeast corner of the Study area and is of limited areal extent and is located within sections 01, 11, 12, and 13-22-36-03-W3M, NE-02-36-03-W3M, and SE-24-36-03-W3M (Figure A9 of Technical Memo). It generally overlies the lower till unit of the Mennon Formation or can sit directly on bedrock surface. The aquifer comprises gravel, sand, silt and clay and has a bulk hydraulic conductivity on the order of 10^{-6} m/s to 10^{-4} m/s in the sands and gravels. It has been reported to range between 0.6 m and 36.6 m in thickness. There is not extensive use of this aquifer and therefore limited information on groundwater availability. The vulnerability of the aquifer to surface contamination is considered to be low.

Groundwater type varies in the Mennon aquifer with the most common types being calcium-bicarbonate, sodium sulphate and calcium-sulphate type waters (MDH, 2011). Concentrations of sodium and sulphate often exceed CCME aesthetic objectives with some reported exceedances of chloride as well. The water type is similar to that of the Empress Group Aquifer.

The Dundurn Aquifer (Sutherland Group)

A complex arrangement of gravel, sand, silt and clay comprises the Dundurn Aquifer. The Lower Dundurn aquifer is located in the northeast corner and in the northwest quadrant of the Study Area within sections 01, 11, 12, and 13-22-36-03-W3M, NE-02-36-03-W3M, section 03-36-05-W3M, and S1/2-10-36-05-W3M (Figure A8 of Technical Memo). The Upper Dundurn Aquifer is predominantly located in the northeast corner of the Study Area within sections 15 and 22-35-04-W3M, W1/2-23-35-04-W3M, W1/2-14-35-04-W3M, E1/2-35-04-W3M, NE-16-35-04-W3M, N1/2-12-36-03-W3M, SE-13-36-03-W3M, NE-04-36-03-

W3M, and NW-03-36-03-W3M (Figure A7 of Technical memo). The Lower and Upper Dundurn Aquifers have been reported to be up to 50.6 m and 67.7 m thick, respectively. Hydraulic conductivity of the gravel and sands is expected to be on the order of 10^{-6} to 10^{-4} m/s in the Lower Dundurn and 10^{-4} m/s to 10^{-3} m/s in the Upper Dundurn with significantly lower conductivity in the silt and clay deposits.

Groundwater in the Dundurn aquifer is not considered to be potable and commonly exceeds the CCME objectives for total dissolved solids, sodium and sulphate (MDH, 2011). Without treatment, the water from the Lower Dundurn aquifer is not suitable for human consumption, irrigation or for livestock supply. Similarly, groundwater in the Upper Dundurn is considered not suitable for consumption (without treatment) and is very hard and sulphate rich. The vulnerability of these aquifers to surface contamination is considered to be low to very low.

The Warman Aquifer (Sutherland Group)

The Warman Aquifer is generally located at the contact between the Warman Formation and the underlying Dundurn Formation and is a complex arrangement of gravel, sand, silt and clay (MDH 2011). The aquifer is present in a very limited extent on the eastern edge of the Study Area within NE-24-35-04-W3M and E1/2-25-35-04-W3M (Figure A6 of the Technical Memo) which aligns with its tendency to occur as isolated intertill stratified deposits. The aquifer has been reported at thicknesses up to 39 m and occurs at an average depth of 8.5 m below grade. Hydraulic conductivity data is not available for the Warman aquifer but can be expected to range between 10^{-6} m/s and 10^{-4} m/s in sand and gravel units and be significantly less in silt and clay units. Groundwater flows towards the river valleys. The Warman Aquifer is characterized as calcium-sulphate type water with exceedances of the CCME water quality objectives for sulphate and sodium commonly occurring.

Floral Formation Aquifer (Saskatoon Group)

Interbedded stratified deposits which occur at the contact between the Sutherland Group and the Saskatoon Group are referred to as the Lower Floral Formation Aquifer whereas interbedded stratified deposits occurring at the contact between the upper and lower till units of the Floral Formation are called the Upper Floral Formation Aquifer (MDH,2011). The Upper Floral Formation aquifer may be hydraulically connected to the Lower Floral Aquifer at several locations and the two units are lithologically similar. These units can form important aquifers, including the Forestry Farm Aquifer which is near the region. The Lower Floral Aquifer is present beneath the northwestern and northeastern corners of the Study Area, within E1/2-01-36-06-W3M, sections 06 and 07-36-05-W3M, W1/2-05-36-05-W3M, W1/2-08-36-05-W3M, sections 01, 02, 03, 11, 12, 13, 14, and 24-36-03-W3M, and sections 25, 35, 36-35-04-W3M, and E1/2-26-35-04-W3M, and NE-34-35-04-W3M (Figure A5 of the Technical Memo). The Upper Floral Aquifer is present beneath the northeastern and southwestern corners of the Study Area withinE1/2-18-35-05-W3M, E1/2-19-35-05-W3M, 20-35-05-W3M, NW-17-35-05-W3M, E1/2-01-36-06-W3M, N1/2-13-36-03-W3M, N1/2-14-36-03-W3M, and 24-36-03-W3M (Figure A4 of the Technical Memo).

The Upper and Lower Floral Formation Aquifers are recharge by infiltration of meteoric water through the Surficial Aquifer and Battleford Aquifers predominantly via depression focussed recharge (MDH, 2011). Groundwater flow is generally downward to and from this aquifer toward s the underlying formations. Horizonal groundwater flow is typically toward the nearest river valleys. The Upper Floral Aquifer is a water source used mainly for municipal purposes. Groundwater is characterized as a calcium-sulphate, calcium-bicarbonate, sodium-sulphate and calcium magnesium-sulphate type water. The Floral Formation Aquifers are considered to be highly vulnerable to surface derived contamination due to their proximity to the surface.

Battleford Aquifer (Saskatoon Group)

The Battleford Aquifer is formed in stratified sediments at the contact between the Battleford and Floral Formation (MDH, 2011). The aquifer has been interpreted to occur at depths between surface and 42 m below grade but is, on average, encountered at depths of approximately 3.3 m. Within the region, the Battleford Aquifer ranged between 0 and 10 m thick. It is typically shallow, relatively thin and discontinuous. Groundwater flow is strongly influenced by topography and generally focused towards local sloughs and depressions and is recharged by infiltrating meteoric water. The Battleford Aquifer is present within the majority of the Study Area, except 17-35-05-W3M, 20-35-05-W3M, E1/2-19-35-05-W3M, E1/2-18-35-05-W3M, and N1/2-31-35-05-W3M (Figure A3 of the Technical Memo).

The Battleford Aquifer is generally not used as a water supply due to its discontinuous nature and shallow depth. Groundwater from this aquifer is calcium-magnesium-bicarbonate (recharge zones) to calcium-magnesium-sulphate type water (discharge zones). Because of it shallow nature, the Battleford Aquifer has high to very high aquifer vulnerability for contamination from the surface.

Surficial Aquifer

The Surficial Stratified Deposits have been encountered at thicknesses of up to 97 m but average 11.4 m thick (MDH, 2011) and generally present across the Study Area (Figure A2 of the Technical Memo). Within the region, the aquifer deposits range between 0 m and 10 m thick. Many towns and rural municipalities use the Surficial Aquifer for water supply and sustainable yield is largely dependent on the thickness, areal extent, recharge rate and available drawdown which can vary across the area. Groundwater flow is strongly influenced by topography and is locally focused towards sloughs and depressions and regionally towards lakes and river valleys. Recharge is dominated by infiltration of meteoric water. Bulk hydraulic conductivity is generally between 10^{-3} m/s and 10^{-4} m/s.

Groundwater in the Surficial Aquifer is relatively fresh and characterized as calcium-magnesium-bicarbonate type water (MDH, 2011). The water quality changes with residence time becoming more highly mineralized near discharge areas. Groundwater in the Surficial Aquifer has high vulnerability to contamination from a surface source (MDH, 2011)

1.2.3 Potential for Hydraulic Connections with Deeper Aquifers

The Bearpaw and the underlying Judith River Aquifer are the only aquifers which are generally present throughout the Study Area. Therefore, the potential for hydraulic connection to the upper Bearpaw Aquifer will be the focus of this discussion.

The depth of the Bearpaw Ardkenneth Aquifer ranges from approximately 62.9 m below grade level (mBGL) to 158.5 mBGL (MDH, 2011b). The shallowest depth of the Bearpaw Ardkenneth Aquifer was observed in borehole 45301 of cross section F-F' (MDH, 2011b). Borehole 45301 intersects the following strata: the Surficial Stratified Deposits, the Battleford till (15 m), the Upper Dundurn till (5 m), the Bearpaw Snakebite silt and clay (13 m), the Bearpaw Ardkenneth Aquifer and the Judith River Aquifer. At this location, there is more than 30 m of fine grained material that could be considered to be an aquitard, present between the Surficial aquifer and the Bearpaw Ardkenneth Aquifer and the Judith River Aquifer. The CDR report of Tuscan Ridge Estates (Whitewater Holdings, 2014) reported the horizontal hydraulic conductivity values of the Battleford till that ranged between 2×10^{-9} m/s (monitoring well 13-01) to 9×10^{-9} m/s (monitoring well 13-10). Vertical gradients are generally accepted to be at least one order of magnitude lower than horizontal gradients (Freeze and Cherry 1979) and therefore vertical conductivity would be at least one order of magnitude less than the conductivity of lateral groundwater flow. The low hydraulic conductivity values of the tills and their cumulative thickness (greater than 30 m) are expected to provide adequate hydraulic isolation from the Surficial aquifer to the Bearpaw Ardkenneth Aquifer and the Judith River Aquifer. Therefore, the hydraulic connection from the Surficial aquifer to the deeper aquifers (the Bearpaw Ardkenneth Aquifer and the Judith River Aquifer) appears unlikely.

1.2.4 Hydraulic Properties of Local Shallow Aquifers

Hydraulic properties for the Surficial Aquifer (primarily sand members) in the region of Saskatoon were reported by MDH (2011a) to be.

- Transmissivity – 130 m^2/day to 4,000 m^2/day
- Storativity – 0.003 to 0.20
- Hydraulic conductivity – 2.6×10^{-4} m/s to 2.2×10^{-3} m/s.

A total of 83 groundwater monitoring wells were installed within the Surficial Aquifer by several of the CDR reports. The measured hydraulic conductivity values of the Surficial Aquifer by these CDR reports ranged from 1.2×10^{-6} m/s to 3.1×10^{-4} m/s (AECOM, 2016; K & K Land Management and Urban Elements Development Corp, 2012), which was lower than the reported range by MDH (2011a) (2.6×10^{-4} m/s to 2.2×10^{-3} m/s). The measured hydraulic conductivities are provided in Table 2 of the Technical Memo included in Appendix A.1.

Although the Surficial Stratified Deposits may be able to provide a sufficient water supply to meet the needs of a typical domestic supply, the water quality may not meet the applicable domestic use criteria. SKMOE (2016) also provides the water quality criterion of the eligible PWA (the PWA does not contain chemical constituents that make the water unsafe for human consumption or contain constituents that render the water undesirable aesthetically if those constituents cannot be removed). Health Canada (2021) further suggested that concentration of total dissolved solids (TDS) cannot be greater than 4,000 mg/L in an eligible potable aquifer. For example, the TDS concentration reported at well RW-14-001S (15,200 mg/L) was greater than the TDS criterion (4,000 mg/L) for an eligible PWA (K & K Land Management and Urban Elements Development Corp., 2012). In addition, total coliform population was reported to be more than 200.5 most possible number (MPN)/100 mL at wells RW-14-001S to RW-14-005S, and RW-14-011S (AECOM, 2016), which may result in unsafe human consumption. Although groundwater analytical results obtained from the CDR reports are limited, in comparison to the scale of the Study Area , several groundwater quality studies conducted in Saskatchewan consistently indicated that 1) shallow groundwater resources in Saskatchewan are commonly mineralized; 2) nitrates can accumulate in the groundwater resources over time; and 3) shallow aquifers are more susceptible to bacteriological contamination (Klappsteina and Rostron, 2014; Mollahosseini and Abdelrasoul, 2019; Fortin et al., 1991). For these reasons, the surficial aquifer in the Study Area is potentially less desirable as a potential PWA although more local-scale investigations are required.

1.2.5 Non-domestic Pumping Wells within the Study Area

A total of 93 water wells (non -domestic) installed as observation wells or water test holes, which can be considered as non-domestic pumping wells, were identified in the Water Security Agency of Saskatchewan (WSASK) data portal on June 9, 2023 (WSA, 2023c). Details of the 93 wells or test holes are provided in the Technical Memo of Appendix A.1.

Screened interval details were provided on the Water Well Driller Reports (WWDRs) for 18 of the 93 wells. Based on the WWDRs, the water sources for the 18 non-domestic pumping wells are provided in the Technical Memo of Appendix A.1. As indicated in the Technical Memo of Appendix A.1, the water sources for the non-domestic pumping wells primarily include Surficial Aquifer, Lower Floral Aquifer, Upper Dundurn Aquifer, and Bearpaw Ardkenneth Aquifer.

Groundwater flow within the Surficial Aquifer is strongly topographically influenced. The groundwater flow pattern within the Surficial Aquifer in the Study Area is anticipated to be generally towards Patience Lake (located northeast of the Study Area) combined with depression focused flow to sloughs and groundwater flow towards the South Saskatchewan River (located west of the Site).

1.2.6 Existing Groundwater Monitoring Wells Within the Study Area

Between 2010 and 2017, 83 monitoring wells were reportedly installed within the Study Area based on the available CDRs. The location of groundwater monitoring wells installed within the Study Area are

shown on Figure A14 of the Technical Memo included in Appendix A.1. and details of the existing groundwater monitoring wells are provided in Table B2 of the Technical Memo included in Appendix A.1.

A figure showing existing groundwater monitoring wells which are installed within the Study Area is provided as Figure A14 of the Technical Memo included in Appendix A.1. Only one round groundwater monitoring was completed by each of the CDR investigations. Details of groundwater monitoring results obtained from the CDR reports are summarized by the Technical Memo of Appendix A.1.

A single round of groundwater monitoring and sampling was completed for each of the CDR investigations. The current status of the groundwater monitoring wells is unknown at this time. Nitrate and Chloride results were available therefore groundwater analytical results for nitrate and chloride obtained from the CDR reports are summarized by the Technical Memo of Appendix A.1.

Some of the reported nitrate concentrations exceeded Canadian Drinking Water Quality Guidelines (Health Canada, 2022) from some locations at the CDR investigation areas. Sources of anthropogenic nitrate contamination to groundwater include septic system effluent, domestic animal waste, and home and farm usage of nitrogen fertilizer. Land use in the Study Area currently includes agricultural, commercial, and residential. Therefore, the elevated nitrate concentrations could be a result of any of the anthropogenic inputs discussed above.

The chloride concentrations at the three CDR investigation sites were fairly consistent and they were lower than the applicable guidelines, suggesting that chloride impacts to groundwater may not be historically present within the Study Area. However, there is potential for increased chloride concentrations resulting from increased land development and the likely increase in the use of road salt within these developments.

1.2.7 Potential Annual Variability of Groundwater Levels

As mentioned above in the previous Section, only one round groundwater monitoring event was completed by each of the CDR investigations. This does not provide a sufficient data set to evaluate the potential annual variability of groundwater levels.

A WSA observation well, Goodale Farm 009 (WWDR# 120923), is located in the southwest quarter of Section 04, Township 36, Range 04, and West of the 3rd Meridian (SW-04-36-04-W3M) and is within the Study Area. This well was installed in 1974 to a depth of 10.06 mBGL and completed in the Surficial Aquifer. The observation well is used to observe natural groundwater level fluctuations. The long-term groundwater level variations over a period from 1974 to 2022 are presented in the Technical Memo of Appendix A.1.

The Surficial Aquifer is an unconfined aquifer and therefore contains a water table that fluctuates in response to recharge (USACE, 1999). The WSA (2023b) reported that seasonal minimums in the

observation well (Goodale Farm 009) typically occur in March-April with maximum elevations reported in June-July. The groundwater recharge was mainly concentrated in the period from June to July, resulting in the highest groundwater levels.

Although the Goodale Farm 009 well cannot be fully representative of the Surficial Aquifer in the Study Area, its groundwater monitoring data (WSA, 2023) indicated three major factors determining the groundwater level variability in the Surficial Aquifer; 1) the interaction between groundwater and surface water; 2) the "depression-focused" groundwater recharge and discharge; 3) the seasonable recharge and discharge.

Since the three major factors are likely present in the Study Area, potential annual variability of groundwater levels within the Surficial Aquifer is expected to be present.

1.2.8 Recommended Groundwater Monitoring Wells

Additional nitrate loading in the Surficial Aquifer could result in downward migration of the nitrate impacted groundwater into the deeper aquifers. A thick sequence of till aquitards is generally present between the Surficial Aquifer and the Bearpaw Ardkenneth Aquifer and the Judith River Aquifer. However, where present the shallower aquifers, such as the Battleford Aquifer and the Upper Floral Aquifer, may not have the same thickness of aquitard overlying them to impede downward migration of groundwater from the surficial aquifer. To determine the vulnerability of the Battleford and Upper Floral Aquifers to nitrate impacts in the Surface Aquifer, additional groundwater monitoring wells are recommended to be installed in areas where future developments are anticipated or currently have higher densities within the Study Area specifically targeting the Battleford Aquifer and the Upper Floral Aquifer. These wells should be used to monitor and/or assess groundwater quality as well as the potential for downward migration of contaminants and the associated aquifer vulnerability.

1.2.9 Amount of Additional Water Being Discharged

The amount of additional residential or commercial wastewater being discharged into the Surficial Aquifer will be calculated by using the water mass balance approach, based on the proposed water demand, and the current effluent discharge amount. The below equation conceptually provides the water mass balance calculation:

$$Additional\ Discharge = Water\ Demand - Existing\ Discharge$$

In order to estimate the additional water being discharged, as shown on the above equation, the water demand needs to be firstly calculated. The proposed water demand can be estimated based on the predicted population in the Study Area. However, the land use plan is unavailable at the time of this study, therefore proposed water demand cannot be estimated at this time. Similarly, it is not possible to estimate the amount of discharge that could enter the aquifer without the same information. It is

recommended that the further the inputs of the mass balance are considered to be further evaluated so a representative mass balance can be calculated for the Study Area in the future.

1.2.10 Summary

The following summarizes the Technical Memo results and identifies potential data gaps.

- The extents of the Surficial Aquifer(s) were identified where possible; however, due to the scale of Study Area further information is required at a Site level scale to accurately determine the extents. The Surficial Stratified Deposits at select locations in the Study Area may be able to provide a sufficient water supply to meet the needs of a typical domestic supply; however, the water quality may not meet the applicable domestic use criteria. SKMOE (2016) also provides the water quality criterion of the eligible PWA (the PWA does not contain chemical constituents that make the water unsafe for human consumption or contain constituents that render the water undesirable aesthetically if those constituents cannot be removed). There is groundwater from monitoring wells in the Study Area from the surficial aquifer that reportedly had elevated TDS concentrations, suggesting the surficial aquifer is not optimal for a PWA; however, more information, such as groundwater monitoring and analytical data may be required to support of refute this observation.
- The potential for hydraulic connections with deeper aquifers is discussed at a regional scale and generally appears to be limited in Study Area with the potential aquitard within portions of the Study Area. The low hydraulic conductivity values of the tills and their cumulative thickness (greater than 30 m) are expected to provide sufficient hydraulic isolation from the Surficial aquifer to the Bearpaw Ardkenneth Aquifer and the Judith River Aquifer. Therefore, the hydraulic connection from the Surficial aquifer to the deeper aquifers (the Bearpaw Ardkenneth Aquifer and the Judith River Aquifer) appears unlikely. However, due to the scale of the Study Area, further investigation may be required in areas with future development or areas of concern/interest.
- A total of 93 non-domestic pumping wells were identified within the Study Area (through available and publicly available information) with their source of water. Based on the WWDRs of the 18 wells whose screen intervals were reported, the water sources for the non-domestic pumping wells include Surficial Aquifer, Lower Floral Aquifer, Upper Dundurn Aquifer, and Bearpaw Ardkenneth Aquifer. The expected regional shallow groundwater flow directions within the Surficial Aquifer(s) is expected to generally follow the topography in the Study Area; however, additional information is required to support or refute this hypothesis.
- A total of 83 groundwater monitoring wells from available CDRs from 2010 to 2021 were evaluated, reviewed and tabulated. It should be noted that there was only a single monitoring event from the monitoring well network from the available CDRs. Select groundwater chemistry (nitrate and chloride) results were available from 42 of the 83 groundwater monitoring wells within these CDRs. It is recommended that an inventory and evaluation of the existing monitoring wells be completed. The existing monitoring wells could be monitored and sampled or included in an annual groundwater

monitoring event to evaluate the variability of the groundwater conditions and quality over time. Additional groundwater monitoring wells may be required in areas of higher development to obtain baseline conditions and to monitor potential changes over time to the surficial aquifers and underlying aquifers (if any).

- Hydraulic properties for the Surficial Aquifer (primarily sand members) in the region of Saskatoon were reported by MDH (2011a) to be:
  - Transmissivity range of 130 m^2/day to 4,000 m^2/day.
  - Storativity range of 0.003 to 0.20.
  - Hydraulic conductivity range of 2.6×10^{-4} m/s to 2.2×10^{-3} m/s.
  - Groundwater analytical results obtained from the CDR reports are limited, in comparison to the scale of the Study Area, several groundwater quality studies conducted in Saskatchewan consistently indicated that 1) shallow groundwater resources in Saskatchewan are commonly mineralized; 2) nitrates can accumulate in the groundwater resources over time; and 3) shallow aquifers are more susceptible to bacteriological contamination. Therefore, the surficial aquifer in the Study Area is potentially less desirable as a potential PWA although more local-scale investigations are required.
- The potential annual variability of the groundwater levels within the surficial aquifers was discussed; however, there was not long term representative monitoring data available within the Study Area. One WSA observation well was completed in the shallow Aquifer and monitored from 1974 until now. At the start of monitoring in 1974, water levels began a long-term decline, which lasted until 2003. However, following that decline water levels began to increase dramatically, reaching a record high in 2012 and fluctuating seasonally until 2016. Since 2016, the groundwater elevation has continued to decline through 2022. The relatively significant groundwater level variations over the long time period can be attributed to the interaction between groundwater and surface water (nearby sloughs) and “depression-focused” groundwater recharge and discharge (WSA, 2023b). This observation well is likely not representative of the Surficial Aquifer in the entire Study Area and a larger monitoring well network is required to determine the varying or consistent conditions over time.
- Additional recommended groundwater monitoring wells has been recommended area where nitrate loading may be occurring (developed areas/higher density areas), where the Battleford Aquifer (17-35-05-W3M, 20-35-05-W3M, E1/2-19-35-05-W3M, E1/2-18-35-05-W3M, and N1/2-31-35-05-W3M. and/or the Upper Floral Aquifer (E1/2-18-35-05-W3M, E1/2-19-35-05-W3M, 20-35-05-W3M, NW-17-35-05-W3M, E1/2-01-36-06-W3M, N1/2-13-36-03-W3M, N1/2-14-36-03-W3M, and 24-36-03-W3M) are present. A cost-effective strategic plan for future monitoring wells/ networks is recommended, which could include specific areas where future developments or with higher densities within the Study Area is proposed to monitor/assess groundwater variations/quality conditions at that scale versus the entire Study Area.

- The estimate and illustration the amount of additional water being discharged into the surficial aquifer(s) from either local supply of piped potable water and/or deeper wells from nearby sewage systems could not be accurately determined with the available information at this time. The amount of additional residential or commercial wastewater being discharged into the Surficial Aquifer will be calculated by using the water mass balance approach, based on the proposed water demand, and the current effluent discharge amount. The proposed water demand can be estimated based on the predicted population in the Study Area. However, the land use plan is unavailable at the time of this study and without the land use plan, the proposed water demand cannot be estimated at this time. Therefore, the amount of additional water being discharged into the Surficial Aquifer will be estimated when the information/equation inputs (i.e., the land use plan and the current effluent discharge amount) are available. It is recommended that the further the inputs of the mass balance are considered to be further evaluated so a representative mass balance can be calculated for the Study Area in the future.

2.0 POTABLE WATER

The Potable Water Study includes the following scope of work:

- Compile a list of all potable water utility providers for existing developments within the SADP.
- Collect, catalogue, and map all existing potable water infrastructure within the SADP, including well supply systems. Water infrastructure inventory to include pipe length, material, diameter, valves and type, existing line/system capacity, and all other pertinent potable water infrastructure information as it is available.

2.1 REFERENCE INFORMATION

The following design guidelines, codes, standards, and existing reports were used to inform this study:

- Water Security Agency (WSA), Water Pipeline Design Guidelines, EPB 276, 2015,
- Saskatchewan Association of Rural Water Pipelines (SARWP), Rural Water Pipeline Handbook for Saskatchewan, 2009,
- City of Saskatoon (CoS), Design and Development Standards Manual, current edition
- DRWU, Service Lateral Installation Specifications, 2021,
- P4G District Official Community Plan, 2022, and
- RM supplied Comprehensive Development Reviews (CDR).

2.2 POTABLE WATER UTILITIES

The potable water distributed within the Study Area is treated by the CoS, and then managed by SaskWater, a Crown corporation that provides water supply services to municipalities, First Nations, and businesses outside of the major cities. Existing developments within the Study Area are supplied, through SaskWater, by several private water utility providers currently operating within the Study Area:

- Dundurn Rural Water Utility (DRWU)
- Lost River Water Utility (LRWU)
- Canron Water Supply
- South Yellowhead Water Corp.
- Range Road 3045 South Water Corp.
- Southeast Corman Park Waterline

The RM of Corman Park also has water supply lines within the SADP Study Area.

Some of the potable water servicing network is shown in Figure A.2.1, including SaskWater, DWRU and the RM of Corman Park. Additional plans for some of the other suppliers are included in Appendix A.2.

There are numerous wells located throughout the Study Area that service individual properties. Most of these wells service domestic water supply use and are also shown in Figure A.2.2.

2.3 RURAL WATER UTILITIES

A summary of the rural water supply arrangements for each existing development within the Study Area is included in Table 2-1 – Study Area Potable Water Supply – Existing Developments. The table also indicates whether a CDR was made available for each existing development. Future developments were not included.

Table 2-1 – Study Area Potable Water Supply – Existing Developments

Development	Type of Development	Number of Lots	Potable Water Supplier	CDR available
Birchwood Heights	Rural Residential	12	DRWU	
Furdale North	Rural Residential	67	DRWU	
Furdale South	Rural Residential	19	DRWU	

Development	Type of Development	Number of Lots	Potable Water Supplier	CDR available
Riverside Estates	Rural Residential	85	RM of Corman Park	
Beaver Creek	Rural Residential	56	DRWU	
Grasswood North	Rural Residential	86	RM of Corman Park	
Venn Developments	Rural Residential	5	LRWU	
Grasswood South	Rural Residential	46	RM of Corman Park	
Edgemont Park	Rural Residential	99	LRWU	Yes
Wood Meadows	Rural Residential	17	Woods Water Corporation	
Casa Rio	Rural Residential	77	RM of Corman Park	
Crossmount Cider Company	Commercial	n/a	DRWU	
The Village at Crossmount	Retirement Community	n/a	DRWU	Yes
Grasswood Estates	Rural Residential	78	DRWU	Yes
Casa Rio East	Rural Residential	37	RM of Corman Park	
Ashwood Estates	Rural Residential	15	DRWU	
South Point Estates	Rural Residential	41	DRWU	
Deer Meadows	Rural Residential	8	DRWU	
Bedford Acres	Rural Residential	15	Southeast Corman Park Rural Water Corporation	
Tuscan Ridge Estates	Rural Residential	43	LRWU	Yes
Hidden Ridge Estates*	Rural Residential	30	LRWU	
Meadow Ridge Estates	Rural Residential	27	LRWU	Yes
Applewood Estates*	Rural Residential	39	LRWU	Yes
Ravenswood	Rural Residential	40	RM of Corman Park	
East Floral Industrial Park Ltd.	Industrial	n/a	East Floral Industrial Park Ltd.	Yes

In addition to the information presented above, there are other waterlines which service various farmyards within the Study Area, including: South Yellowhead Water Corp., Range Road 3045 South Water Corp. and Southeast Corman Park Waterline.

Based on a review of the available CDRs, the rural residential developments are serviced by low pressure rural pipeline systems that have several characteristics described below, not typically used in municipal design:

- Delivery is based on an average flow over a 24-hour period, typical values being 2.27 L/min (0.5 Imp gal/min) to 4.54 L/min (1 Imp gal/min).
- Fire flows are not included within the Study Area.
- The layout is based on a branch design. Loop design is preferred but is generally not considered due to costing constraints.
- Most rural pipelines are designed with in-house storage (cistern) systems which increases the reliability of water supply. Typical storage tanks range from 450 L to 5,500 L (100 to 1,200 Imp gal). In the event of loss of flow from the supply line, the property owner relies on the reserve water from their storage tank until flow is restored. Storage tanks help to reduce the instant demand on the water source especially in peak periods during the day, thereby making the pipeline safer and more economical.
- Property owners are expected to install their own in-house pressure system to provide the desired pressure that they want. In some circumstances, in-house treatment systems are also installed by individual property owner.

Developments that may include private fire protection considerations are The Village at Crossmount and East Floral Industrial Road.

2.3.1 SaskWater

SaskWater has provided a kmz file including potable and non-potable water supply lines within the study area and additional size and material information for these pipelines. A booster station for potable water distribution is located in Saskatoon, east of Clarence Avenue and south of CN Rail. Only the potable water distribution lines are shown in Figure A.2.1 in Appendix A.2.

2.3.2 DRWU Pipeline Network

SAL Engineering maintains information on the DRWU pipeline network, where a .kmz file with pipe information was provided to Stantec together with a pipe size colour-coding legend. The following information was also provided by SAL Engineering:

- All waterlines are HDPE ranging from DR 9 to DR 17 depending on system pressure requirements.
- The DRWU waterline system has no hydrants for fire protection. However, the system does contain flush-outs, swab launches, and air releases at various locations throughout the system for pipeline operation and maintenance.

- The DRWU has hundreds of valves on their system, including curb-stop valves and isolation valves. The specific location of each valve would need to be provided by DRWU.
- The locations of DRWU pumphouses and pressure reducing manholes would need to be provided by DRWU.
- At current usage rates, the DRWU waterline system generally has additional capacity remaining for future connections. However, note that additional capacity is dependent on specific location, elevation, flow rate requested, proximity to pumphouses, proximity to larger diameter mainlines, approval from SaskWater, etc. Therefore, additional capacity is typically analyzed on a case-by-case basis.

The potable water linework provided by SAL Engineering is included in Figure A.2.1 in Appendix A.2.

2.3.3 Other Potable Water Suppliers

The LRWU pipeline network information for this Study Area was requested from LRWU, but it has not received to date.

The RM has provided waterline plans for three communities serviced by LRWU: Edgemont, Tuscan Ridge Estates and Hidden Ridge Estates.

Potable waterlines plans were also provided by the RM for: Canron Water Supply, Southeast Corman Park Waterline, Range Road 3045 South Water Corp. and South Yellowhead Water Corp.

All the potable waterlines plans provided by the RM are included in Appendix A.2.

2.4 WATER SUPPLY WELLS

In addition to the rural residential, commercial, and industrial developments, there are various farms spread throughout the SADP that obtain their water supply through wells. An inventory of the public water wells located within the SADP is provided in Appendix A.2. Most of these wells have a domestic water use including withdrawal use type, which are shown on Figure A.2.2.

3.0 WASTEWATER

The Wastewater Study includes the following scope of work:

- Reviewing available wastewater infrastructure documents and plans to understand the level of existing infrastructure and capacities for residential and commercial purposes within the Study Area.
- Review private sewage septic system permitting data, made available by the Saskatchewan Health Authority (SHA), in conjunction with information made available within the CDR reports, to understand the number of existing SHA private sewage permits (June 2012 to July 2023) within the Study Area.

3.1 REFERENCE INFORMATION

The following design guidelines, codes, standards, and existing reports were used to inform this study:

- City of Saskatoon, Design and Development Standards Manual, latest edition,
- WSA, Sewage Works Design Standard, EPB 503, latest edition,
- P4G District Official Community Plan,
- Saskatchewan Health Authority, The Public Health Act - Private Sewage Works Regulations, P-37.1 Reg 14, 2011
- Saskatchewan Health Authority, Sewer and Water Line Installation,
- MPE, English River Enterprises Property Management LP – Wastewater Treatment Facility IFC, 2020,
- MPE, English River Property Management LP, WWTF – Effluent Disposal Methodology Memorandum, 2022,
- Stantec, R.M. Corman Park – Wastewater Forcemain Feasibility Memorandum, 2023, and
- RM supplied Comprehensive Development Reviews.

3.2 EXISTING INFRASTRUCTURE

As the largest rural municipality in Saskatchewan, the RM is experiencing an increased demand for development. A large portion of this development is focused directly south of Saskatoon between

Highway No.11 and the South Saskatchewan River. While the majority of existing developments are serviced by private water suppliers identified in Section 2.0, the RM does not have a municipal wastewater collection system to service these existing, or future, developments. Existing developments within the Study Area use a variety of private on-site septic systems such as septic tanks with pumping services, to haul the wastewater off site, or a septic tank with a septic field which treats the effluent and discharges into the ground. As density within this region increases, septic fields will become a less viable option.

An existing wastewater treatment facility currently exists directly west of Highway No.11 on the Grasswood Reserve 192J south of the CoS which is owned and operated by the Des Nedhe Utilities Corporation (English River). The treatment facility was constructed to service development on the English River First Nation Reserve and adjacent lands within the Study Area. The current capacity of the treatment facility is 276 m^3/day with potential to expand to 500 m^3/day. Future expansion to 1,000 m^3/day and 2,500 m^3/day have also been discussed but would require full replacement of the existing facility and a permanent discharge location.

MPE Engineering Ltd. (MPE) had completed the design for this wastewater facility and provides support to English River treatment facility management group. As part of their work, MPE has prepared a technical memorandum summarizing the effluent disposal strategy for the treatment facility and it can be found in Appendix A.3, along with the treatment facility Issued for Construction (IFC) drawings. Based on the information presented in this technical memorandum, the treatment facility has a disposal capacity of 217 m^3/day using a combination of evaporation and irrigation. Both disposal methods vary greatly with Saskatchewan's seasonal climates. Permanent disposal to the South Saskatchewan River and through the CoS's storm system have been discussed. However, neither option has been approved. Permanent disposal will be required prior to the treatment facility reaching its 276 m^3/day capacity. Earlier this year, Stantec completed a preliminary forcemain feasibility review for the RM on the projected wastewater design flows from the proposed Edgemont East, and other land developments, within the Study Area to the wastewater treatment facility. This wastewater forcemain feasibility report can be found in Appendix A.3.

3.3 NITRATE LOADING - EXISTING SHA PRIVATE SEWAGE PERMITS

Nitrate loading is a crucial parameter in environmental assessments, especially concerning water quality and ecosystem health. It is essential to understand the distribution and sources of nitrate loading within a specific area to develop effective management strategies. Creating a nitrate loading map helps identify areas of concern and prioritize mitigation efforts. However, constructing an accurate and representative map requires robust and comprehensive data.

It is assumed that the existing nitrate loading is concentrated to the existing developed areas within the Study Area, based on the high housing density within these areas of land producing effluent at a

generally consistent rate. Outside of these existing developments, the current understanding of any potential nitrate loading occurring is limited to publicly available private sewage system permit data produced by the SHA. Appendix A.3 identifies the SHA's electronically documented private sewage permit data currently available, with Figure A3.1 illustrating the lands in which the SHA has granted private sewage permits within the Study Area. The catalogued wastewater septic systems must meet residential strength discharge requirements as a minimum to be permitted by the SHA. The data presented is inclusive of all approved permit applications after June 2012 and before July 2023. The SHA private sewage permit data is limited to the date of approval, permit number, and legal land description. SHA private sewage permit information prior to June 2012 can be made available by the SHA upon request by paying the SHA administrative fee for them to physically retrieve the information from their archives.

The information provided in the SHA permitting data set does not include nitrate loading concentrations (mg/L), nor do they include the wastewater septic system type or any form of tracking of continued performance for each permitted location. Only residential and commercial nitrate loads were originally considered for this report, with existing agricultural loads not being considered within the Study Area. The insufficiency of nitrate loading data within the Study Area hampers the creation of a representative nitrate loading map. Addressing the limitations in monitoring stations, data collection and duration, sampling frequency, and data quality will enable accurate mapping and contribute to effective decision-making and water resource management in the study area.

4.0 DRAINAGE AND STORMWATER

The Drainage Study includes the following scope of work:

- Describe drainage features and watershed characteristics within the Study Area.
- Identify and map existing watershed boundaries, major surface water flow paths, drainage infrastructure including culverts, bridges, drainage channels and drainage easements, and the directional flow of water within the roadside ditches.
- Provide an inventory of identified culverts including the diameter, length, and material type of each.

4.1 REFERENCE INFORMATION

The following design guidelines, codes, standards, applications, and existing reports were used to inform this study:

- Ministry of Highways, Hydraulic Manual, 2020,

- Ministry of Highways HydSask Mapping Application,
- Saskatchewan Ministry of Environment, HabiSask and Sask Interactive Mapping Applications,
- Water Security Agency, Agricultural Drainage Application Mapping (ADAM),
- City of Saskatoon, Design and Development Standards Manual, current edition,
- Water Security Agency, Stormwater Guidelines, 2014,
- P4G District Official Community Plan, 2022,
- City of Saskatoon, Green Network Pilot Project, 2019,
- Barr, RM of Corman Park Hydraulic Modelling and Mapping for South Saskatchewan River, 2019,
- Barr, RM of Corman Park Dyke Feasibility Technical Memorandum, 2020, and
- RM supplied Comprehensive Development Reviews.

4.2 WATERSHED CHARACTERISTICS

The Study Area covers an approximately 228 km^2 area and it falls within three main watersheds named The Beaver (Brightwater) Creek at the Mouth, South Saskatchewan River at the CoS, and South Saskatchewan River at St. Louis. Table 4-1 provides the Study Area information for each watershed referencing drainage area information from Agriculture and Agri-Food Canada (AAFC), and other watershed characteristic information. Figure A.4.1 illustrates the AAFC watershed boundaries, including the Gross Drainage Area (GDA) and Effective Drainage Area (EDA) portions within each watershed, as well as watercourses, waterbodies, and major surface water flow paths.

The GDA and EDA definitions are as follows:

- **GDA:** The GDA of a stream at a specified location is that plane area, enclosed by its drainage divide, which might be expected to entirely contribute runoff to that specified location under extremely wet conditions. The gross drainage boundary is the drainage divide or the height of land between adjoining watersheds.
- **EDA:** The EDA is that portion of a drainage basin which might be expected to entirely contribute runoff to the mainstream during a flood with a return period of two (2) years. This area excludes marsh and slough areas and other natural storage areas which would prevent runoff from reaching the mainstream in a year of average runoff.

The Non-effective Drainage Area can be considered as the difference between the GDA and the EDA.

Table 4-1 – Study Area Watershed Characteristics

AAFC Watershed Name	Study Area Watershed Name	GDA* (km^2)	EDA* (km^2)	General Drainage Directions	Key Drainage Features
The Beaver (Brightwater) Creek at the Mouth	South Study Area Watershed	60	4	N - S and E - W to Beaver Creek	Beaver (Brightwater) Creek, a tributary of South Saskatchewan River
South Saskatchewan River at Saskatoon	West Study Area Watershed	73	29	E - W to South Saskatchewan River	
South Saskatchewan River at St. Louis	East Study Area Watershed	95	0	SE - NW to South Saskatchewan River	Large slough system, oriented SE - NW, located on both sides of Highway No.16

Note: *Within Study Area

The EDA within the south and west of the Study Area catchments are the effective drainage corridors along Beaver Creek and on the east bank of the South Saskatchewan River. The east Study Area catchment is part of the non-effective drainage area of the South Saskatchewan River.

As seen from the EDA and GDA values in Table 4-1, most of the Study Area is a non-effective drainage area, typical for the Prairie Pothole Region. Several small and some larger sloughs exist throughout the SADP that are hydrologically closed topographic depressions with no permanent inlet or outlet. A larger slough system is located around the Canadian Pacific (CP) Rail, Canadian National (CN) Rail and Highway No.16 alignments in the east Study Area watershed. In wet years sloughs may fill and spill in the predominant drainage direction, towards a mainstream or to terminal larger sloughs within their watershed. During average years, the sloughs fill and evaporate in seasonal cycles, without spilling into other bodies of water.

The only defined watercourse within the Study Area is Beaver (Brightwater) Creek, a tributary of the South Saskatchewan River. This is a meandering watercourse, intersecting Highway No.219 approximately 2.5 km upstream from its confluence with the South Saskatchewan River

4.2.1 AGRICULTURAL DRAINAGE

A review of aerial imagery and WSA's Agricultural Drainage Application Mapping (ADAM) database within the Study Area did not reveal any extensive agricultural drainage networks. A channelized drainage run is visible on section 03-36-04 W3M, flowing NE to SW and intersecting CP railway and Highway No.16, as shown in Figure 4.1. The drainage run ends at Range Road 3043, where it joins the east road ditch,

flowing south. However, no highway or railway culverts could be located for this drainage feature. There are currently no Conservation and Development Area Authorities (CDA's) or Watershed Associations (WA's) within the Study Area.

Figure 4-1 – Drainage Run on Section 03-36-04 W3M

4.3 DRAINAGE INFRASTRUCTURE

The review of existing drainage infrastructure included both culverts and bridges through roadways and highways, which are shown on Figure A.4.1 in Appendix A.4. There was no review completed of rail crossing infrastructure, although those features certainly exist, as that information was not made available for this project and a review of aerial imagery did not show any obvious rail culvert or bridge crossings.

4.3.1 Bridges

The Saskatchewan Ministry of Highways (MoH) and the Saskatchewan Association of Rural Municipalities (SARM) maintain databases of bridges, complete with bridge files and bridge design information. However, a search of both the MoH and SARM bridge locations did not return any results within the Study Area.

Aerial imagery review showed two bridges on Beaver (Brightwater) Creek, located between the south Study Area watershed and Highway No.219. These appear to be small structures for limited vehicular traffic. The bridge locations are shown in Figure 4.2 and are included in a bridge inventory identified in

Appendix A.4. As confirmed by the RM, these two bridges are on private roads and are not the RM's property.

Figure 4-2 – Bridge Locations

4.3.2 Culverts

Two culvert inventories were compiled including one based on the HydSask MoH culvert database, and the other based on culvert information surveyed by Stantec. These inventories are identified in Appendix A.4. A .kmz file identifying the collect culvert locations will be presented to the RM upon project completion.

4.3.2.1 MoH Culverts

The HydSask application provides culvert locations (highway control section and km and latitude and longitude) and information related to culvert diameter, material, length, type of crossing, embankment height, and watercourse name where applicable. Although the culvert information is updated regularly by the MoH, it may be missing culverts or not reflect recent culvert replacements. Three culvert sets were extracted from the application that include:

- Highway No.11 – Nine (9) culvert crossing locations.
- Highway No.16 – Eleven (11) culvert crossing locations.

- Highway No.219 – One (1) culvert crossing location.

The Highway No.11 and No.16 crossings are small size Corrugated Steel Pipe (CSP) culverts in the range of 500 mm to 800 mm diameter, with the exclusion of an existing cattle crossing located within S 07-35-04 W3M, with one (1) 1,800 mm diameter CSP culvert crossing beneath each adjacent set of highway lanes.

The Highway No.219 crossing over Beaver (Brightwater) Creek consists of one (1) 5,000 mm diameter multiplate culvert downstream of the north bridge shown in Figure A.4.3. This is the largest size diameter culvert crossing within the Study Area.

4.3.2.2 Stantec Survey

Stantec collected survey information (June 29, 2023) for twenty-five (25) existing RM culvert crossing locations at sectional junctions within the Study Area. The information collected includes the culvert location (road, intersection, latitude, and longitude), culvert diameter, material, length, type of crossing, culvert inverts, and probable flow direction. Culvert diameters at the locations surveyed range from 375 mm to 675 mm with all culvert material types being CSP.

It is noted that this inventory does not include all RM or private culverts within the Study Area.

4.4 DITCH DRAINAGE DIRECTIONS

The LiDAR data was received on June 30th, 2023 from the RM. However the LiDAR resolution was not sufficient to establish road-side ditch drainage directions at a desktop level.

Survey required to confirm ditch drainage directions would be an extensive future assignment, as the Study Area has a large road network even if including just the Township and Range Roads.

4.5 STORMWATER SERVICING

A review of the stormwater servicing practices was completed using the CDRs of existing developments, provided by RM, within the Study Area. These are summarized in Table 4-2. The rural residential subdivisions use roads with ditch profiles that are graded to convey runoff to stormwater ponds located in natural low areas. In most cases, the ponds are sized to store the incremental post-development runoff for a 1:100-year CoS design storm, plus an additional 25%.

Table 4-2 – Stormwater Management within the SADP – Existing Developments*

Development	Type of Development	CDR Year	Stormwater Storage
Applewood Estates	Rural Residential	2011	Natural low area with sufficient storage for at least 1:100 year storm
Tuscan Ridge Estates	Rural Residential	2014	Natural low areas with sufficient storage for at least 1:100 year storm
Meadow Ridge Estates	Rural Residential	2016	Natural low area with sufficient storage for 1:100 year storm + 25%
Grasswood Estates	Rural Residential	2012	Two on-site ponds with sufficient storage for 1:100 year storm + 25%
Edgemont Park	Rural Residential	2018	Two on-site ponds with sufficient storage for 1:100 year storm + 25%
Ravenswood	Rural Residential	2021	Storage recommendations for a 1:100 year event by way of existing permanent storage or constructed stormwater ponds.
The Village at Crossmount	Retirement Community	2013	Recommendations for detailed drainage plan to be developed as part of the design phase of the project
East Floral Industrial Park	Industrial	2021	Multiple stormwater ponds sized to provide storage for 1:100 year storm + 25% while maintaining a post-development runoff rate less than the pre-development runoff rate of approximately 1450 L/s.

Note: *available CDRs

The drainage plans extracted from the above CDRs are included in Appendix A.4.

5.0 NATURAL AREA SCREENING

The natural area screening was completed to evaluate the Study Area's wetlands, and biophysical features including land cover composition, Species of Conservation Concern (SOCC) and special land designations to identify potential constraints that could require mitigations and/or additional surveys prior to future development. A heritage screening was also completed as per Section 63 of *The Heritage Property Act* (1979-80) to determine heritage sensitivities and archeological sites.

Specific tasks completed as part of the natural area and heritage screening and included.

- Desktop wetland classification, including inventory and maps.

- High-level review and mapping of environmental features/ sensitivities, plant and wildlife species, and heritage review.
- Recommendations for mitigation and conservation measures and identify the need and timing for additional future studies, monitoring or other land management measures.

5.1 REFERENCED INFORMATION

The desktop analysis used publicly available data sources (e.g., imagery, topographical maps, government databases) in order to collect baseline information to inform this study including the following:

- Agriculture and Agri-Food Canada's (AAFC) Annual Crop Inventory (AAFC 2021),
- Classification of Natural Ponds and Lakes in the Glaciated Prairie Region (Stewart and Kantrud 1971),
- Hunting, Angling and Biodiversity Information of Saskatchewan (HABISask) online mapping application (GOS 2023),
- Publicly available aerial imagery,
- Saskatchewan Activity Restriction Guidelines for Sensitive Species (Government of Saskatchewan (GOS) 2017),
- Saskatchewan Conservation Data Centre (SKCDC) species lists (SKCDC 2023a, b),
- Species at Risk Public Registry (Government of Canada (GOC) 2022),
- The Canadian Herpetological Society (2023) for amphibians and reptiles,
- The Cornell Lab of Ornithology (2023a) for birds,
- The Nature Conservancy of Canada (2023) for mammals,
- The Wildlife Regulations, and
- Tracked Vascular Plant Species by Ecoregion (SKCDC 2023 c).

5.2 METHODS AND RESULTS

Detailed methods and results used for the natural area and heritage screening are presented in Appendix A.5 - Natural Area Screening Report.

5.2.1 Wetlands

There are 1,675 wetlands found within the Study Area, ranging from wetland Class II to Class V wetlands and dugout (Appendix A.5 - Natural Area Screening Report). The total Study area is approximately 24,643.4 hectares (ha) with wetlands accounting for approximately 1,211.8 ha, or 5% of the Study Area.

5.2.2 Landcover Composition

The Study Area consists of approximately 34% agriculture, 30% pasture/ forages, 8% shrubland, 8% urban/developed, 5% wetlands and 7% grasslands (Appendix A.5 - Natural Area Screening Report). Areas of native vegetation are potential habitat for species of conservation concern (SOCC) including grassland, shrubland, forests land and wetlands.

5.2.3 Species of Conservation Concern

There are 35 historical records of plant SOCC, 36 historical records or wildlife SOCC/features, and 6 historical records of fish SOCC within the Study Area including a 1 km buffer (Appendix A.5 - Natural Area Screening Report). Many of these observations were recorded along the South Saskatchewan River south of Saskatoon, Saskatchewan in areas with native vegetation (e.g., grassland, shrubland, forests).

5.2.4 Special Land Designations

HABISask was used to determine if there were any special land designations within the Study Area. There is one conservation area, one private conservation easement land management under the provincial crown, five land claims and ten *Wildlife Habitat Protection Act* (WHPA) managed areas within the Study Area (Appendix A.5 - Natural Area Screening Report).

5.2.4.1 Sensitive Environmental Features

There is one known Migratory Bird Concentration Site within the Study Area in the area surrounding the South Saskatchewan River (Appendix A.5 - Natural Area Screening Report). Due to the proximity of the South Saskatchewan River and several wetlands within the Study Area it is expected there is potential for SOCC.

5.2.5 Heritage Resources

Of the 416 quarter sections located within the Study Area, one hundred and ten (110) are heritage sensitive, seventy-two (72) are conditionally heritage sensitive, and two hundred and thirty-four (234) are not sensitive. A Provincial Archaeological Sites Database query identified forty-four (44 archaeological sites that have been documented in the Study Area (Appendix A.5 - Natural Area Screening Report).

5.3 DISCUSSION AND RECOMMENDATIONS

5.3.1 Biophysical Resources

Results of the natural areas screening indicate that the study area is primarily used for agricultural purposes such as cultivation, pasture, and forage crops. However, natural areas such as wetlands and grasslands also occur throughout the Study Area. The natural area screening identified one conservation area, one private conservation easement, five land claims, and ten areas protected under the *Wildlife Habitat Protection Act (*WHPA) areas within the Study Area. In addition, the screening identified a designated Migratory Bird Concentration Site associated with South Saskatchewan River, which is a sensitive environmental feature.

It is recommended that natural areas, areas with special land designations, and sensitive environmental features are avoided for future development. Additional discussion with and approvals from Ministry of Environment (ENV) will be required for any proposed projects within these areas. Potential approvals and permits for developing in these areas include:

- Clearance from ENV may be required for projects that encroach or develop on natural areas including grasslands and wetlands.
- Aquatic Habitat Protection Permits (AHPP) are required for any works within the bed, boundary, or bank of wetlands and other water features (e.g., watercourses).
- Crown mineral lands selected by Saskatchewan First Nations under either Treaty Land Entitlement of Specific Claim Settlement Agreements may become reserve land under the terms of a Land Claim Agreement. Approval from the First Nation and/or the Saskatchewan Ministry of First Nations and Métis Relations may be required for projects that encroach or develop on land claims land. Approvals from Indigenous Services Canada may also be required for development on First Nations land.
- Crown Land Work Authorizations and/or Crown Land Clearances will be required for work on Ministry of Agriculture (MOA) or ENV Crown Lands (including WHPA lands)
- Reviews and/or approvals under the federal Fisheries Act may be required for any proposed works occurring in or fish habitat such as the South Saskatchewan River.

Biophysical surveys may need to be completed in support of projects that require the approvals and permits listed above. Completion of biophysical surveys will further support the identification of site-specific conditions, identify sensitive environmental features requiring mitigation, and confirming permitting and approval requirements (Appendix A.5 - Natural Area Screening Report).

Mitigation measures that should be implemented for project development will vary depending on site-specific conditions and constraints. However, general overarching biophysical mitigation measures that should be considered include the avoidance of natural areas, special land designations, and sensitive environmental features to the extent feasible. In addition, construction activities should generally avoid sensitive breeding windows (April 22 to August 24 for SADP; GOC 2023b). If avoidance of these areas and timing windows is not possible, it is recommended that the R.M of Corman Park works with appropriate regulators (e.g., Ministry of Environment, Water Security Agency, Indigenous Services Canada, Fisheries and Oceans Canada) to determine appropriate levels of study for field surveys, confirm permitting requirements, and discuss required mitigation strategies.

5.3.2 Heritage Resources

A Heritage Resource Review Referral (Heritage Referral) to the Heritage Conservation Branch (HCB) should be submitted for any ground disturbance activities in sensitive and conditionally sensitive quarter sections in the Study Area to determine Heritage Resource Impact Assessment (HRIA) requirements pursuant to Section 63 of *The Heritage Property Act* (Appendix A.5 - Natural Area Screening Report). Completion of additional review of conditionally sensitive quarter sections, a Heritage Referral, or HRIA is not included in the current scope of work for the Study Area.

Should an HRIA be initiated for future project work within the Study Area, it is recommended that a pre-impact HRIA be completed in snow and frost-free conditions before any ground disturbance activities. Avoidance of archaeological sites is always the best mitigation. However, depending on the site type, context of discovery and degree of conflict, other mitigations may be required. General heritage resource mitigation measures that should be considered include:

- Detailed assessment.
- Implementing site protection such as stabilization practices, fences.
- Surface collection to salvage archaeological resources.
- Construction monitoring.
- Salvage/compensatory mitigation.
- Phase 1 (small scale) excavation.

In the event a site of special nature is identified, an increased avoidance buffer of up to 250 m may be required. Recommendations for appropriate mitigative measures are subject to approval by the HCB.

6.0 TRANSPORTATION

The transportation study includes the creation of two transportation maps for the roadways within the project limits.

- A roadway condition rating map.
- A roadway classification map, based on traffic volume.

6.1 REFERENCE INFORMATION

The following design guidelines, codes, standards, applications, and existing reports were used to inform this study:

- Transportation Association of Canada Geometric Design Guide (2017)

6.2 ROADWAY CONDITION ASSESSMENT

A visual inspection of road condition was completed for all asphalt, seal, and gravel surfaced roadways within the project limits. Summer roadways were not assessed but are listed in the roadway inventory. The data from the roadway condition assessment is attached as Figure A.6.1. The data collected during the road condition assessment was as follows: reference number, road name, start and end roadway, surface type, surface width, cracking severity, pothole frequency, rutting severity, smoothness, gravel coverage, average ditch depth, side slope, standing water, number of failures, summary of general overall condition, and overall comments. The weighting of each criterion assessed in the overall road condition rating is outlined in Table 6-1.

Table 6-1 – Road Condition Criteria Weighting

Criterion	Weighting		
Surface Type	**Asphalt**	**Seal**	**Gravel**
Cracking Severity	10%	5%	-
Pothole Frequency	15%	15%	-
Rutting Severity	20%	25%	22.5%
Smoothness	10%	15%	20%
Gravel Coverage	-	-	15%
Ditch Depth	5%	5%	5%
Side Slope	5%	5%	5%
Standing Water	10%	10%	10%
Failures	15%	10%	7.5%
Summary of General Condition	10%	10%	10%

Each roadway received a rating from 1 to 5 with 1 being the best condition and 5 being the worst condition. The roadway condition rating data is shown in Appendix A.6.

Generally, the roadways were found to be in good condition. Issues which were observed with gravel coverage are expected to be addressed when the graders made their next pass for regular maintenance. It should be noted that the roadway inspections occurred in a dry year so there was essentially no standing water present along any roadways.

The roadway which received the worst rating was Cartwright Street west of Highway 219. It received a rating of 3 out of 5 and is classified as an arterial roadway with a daily traffic volume greater than 1,000. This roadway should be prioritized for resurfacing amongst those in the study area. The notes included in the roadway inspection sheet can also be reviewed to determine locations which should be prioritized for local failure repairs.

Upon determining that the worst condition rating identified was a 3, the rating criteria and notes were reviewed again. We believe that in the context of roadways within Saskatchewan, the project area roadways are within fairly good shape overall.

6.3 ROADWAY CLASSIFICATION

The RM of Corman Park currently has traffic data and roadway classifications from their 2020 traffic count program. This existing data including average daily traffic volume (ADT), current roadway classification, and for some locations, truck average daily traffic volume (TADT) and is shown in Table 6-2. The range of traffic volumes on each class of roadway currently vary and overlap significantly between classes. To support the creation of a roadway classification map, additional traffic data was collected, and a roadway classification system based on traffic volume was created. The locations where traffic data was available and traffic counts were collected are shown in Figure A.6.4.

Table 6-2 – Existing ADT

Roadway	Location	ADT	TADT	RM Traffic Count Program Classification
8th Street East	Rock Ridge Road - Highway 316	60	10	6
Cheviot Road	Range Road 3040 - Highway 316	170	7	5
Prairie Steel Lane/Township Road 352	Range Road 3040 - Highway 316	160	8	4
8th Street East	Winmill Road - Freeborn Road	90	-	6
Freeborn Road	8 Street - Highway 394	120	6	5
Freeborn Road	Highway 394 - Township Road 360	70	-	5
Grid 663	Township Road 360 - Township Road 354/Baker Road	420	7	4
Grid 663	Melness Road - Township Road 350	320	-	4
Floral Road/Township Road 360	Range Road 3044 - Winmill Road	140	13	4
Township Road 354	Range Road 3045 - Range Road 3044	140	-	6
Melness Road	Range Road 3045 - Range Road 3044	260	7	4
Grasswood Road	Range Road 3052 - Highway 11	2780	103	2
Floral Road/Township Road 360	Highway 11 - Range Road 3050	350	31	2

Township Road 354	Range Road 3051 - Highway 11	830	29	5
Victor Road	Range Road 3051 - Prairie View Road	260	29	6
Clarence Avenue	Cartwright Street - Grasswood Road	3980	112	5
Grasswood Road	Highway 219 - Clarence Avenue	2650	64	4
Clarence Avenue	Grasswood Road - Township Road 354	860	7	5
Township Road 354	Highway 219 - Clarence Avenue	470	11	5
Range Road 3054	Township Road 352/Victor Road - Poplar Grove Drive	230	-	5

Twenty 24-hour traffic counts were collected using traffic count cameras from May 17 to June 7, 2023. The turning movement daily traffic volumes collected during the traffic counts are shown in Appendix A.6. The traffic count data is included as Figure A.6.2.

The 2020 traffic data was projected to 2023 using an annual growth rate of 1%. The 2023 ADT and TADT for the roadway network is listed in Table 6-3.

Table 6-3 – 2023 ADT

Intersection #	Roadway	Intersection Leg	ADT	TADT	Width (m)
1	Haight Road	North	117	18	8.5
	Range Road 3044	South	88	9	7.5
	Floral Road	East	217	27	9
	Floral Road	West	194	20	9
2	Range Road 3041	North	5	2	-
	Range Road 3041	South	29	4	5.5
	Township Road 364	East	309	23	8.5
	Township Road 364	West	321	23	8.5
3	Range Road 3041	North	474	6	7.5
	Range Road 3041	South	12	0	3
	Highway 394	East	1,054	54	-
	Highway 394	West	1,442	56	-
4	Freeborn Road	North	111	24	8

	Floral Road	East	847	249	8
	Floral Road	West	900	245	8
5	Grid 663	North	499	12	7
	Grid 663	South	460	9	7
	Baker Road	East	10	0	7
	Baker Road	West	59	5	8.5
6	Chases Bluff Road	North	68	6	7.5
	Range Road 3040	South	0	0	-
	Tamke Road	East	121	8	8
	Tamke Road	West	105	8	8
7	Winmill Road	North	30	2	7.5
	Winmill Road	South	63	1	7.5
	Township Road 352	East	189	14	9
	Melness Road	West	242	11	8.5
8	Range Road 3044	North	9	1	7.5
	Tamke Road	East	90	8	8.5
	Tamke Road	West	89	7	9
9	Range Road 3045	North	21	2	7.5
	Range Road 3045	South	50	9	7.5
	Township Road 354	East	229	7	8.5
	Township Road 354	West	250	12	9
10	Range Road 3050	North	22	0	7
	Prairie View Road	South	52	0	7.5
	Highway 11	East	12,296	2,146	-
	Highway 11	West	12,338	2,146	-
11	Prairie View Road	North	16	2	8.5
	Prairie View Road	South	20	2	-
	Tamke Road	East	66	7	9
	Tamke Road	West	60	7	10
12	Range Road 3052	North	88	16	8.5
	Range Road 3052	South	96	8	8.5

	Victor Road	East	170	25	10.5
	Victor Road	West	180	29	10.5
13	Range Road 3053	North	80	15	8.5
	Range Road 3053	South	119	14	7
	Victor Road	East	163	14	10.5
	Victor Road	West	156	11	10.5
14	Range Road 3055	North	23	1	6.5
	Range Road 3055	South	72	3	6
	Highway 219	East	3,834	118	-
	Highway 219	West	3,787	116	-
15	Russell Road	North	8	0	7
	Russell Road	South	15	0	7
	Municipal Road	East	48	4	9
	Municipal Road	West	29	4	8
16	Range Road 3052	North	61	4	8
	Range Road 3052	South	124	7	8.5
	Township Road 354	East	673	6	8
	Township Road 354	West	696	7	8
17	Range Road 3052	North	91	4	8
	Range Road 3052	South	296	18	8
	Grasswood Road	East	3,250	84	8.5
	Grasswood Road	West	3,261	78	8.5
18	Clarence Avenue South	North	3,988	60	8.5
	Range Road 3053	South	2,005	64	8
	Grasswood Road	East	3,309	75	8.5
	Grasswood Road	West	2,948	87	8
19	Strathcona Avenue	North	160	13	6.5
	Strathcona Avenue	South	445	8	7
	Grasswood Road	East	1,446	27	8
	Grasswood Road	West	1,099	30	7.5
20	Strathcona Avenue	North	20	13	4.6

	Strathcona Avenue	South	295	9	6.5
	Cartwright Street	East	1,036	28	6.5
	Cartwright Street	West	775	10	6.5

The traffic volumes for the roadway network as well as the type of access the roadway provides were used as inputs into the traffic classification.

The roadway classification criteria utilized for the project is outlined in Table 6-4. It was developed with reference to the Transportation Association of Canada Geometric Design Guide Table 2.6.4 which outlined roadway classification criteria for rural roadways. No RM roadways were classified as freeways, with the highway network including Highway 11 and Highway 16 filling the freeway classification. Highways 219 and 394 are understood to act as arterial roadways for the area.

Table 6-4 – Roadway Classification Criteria

Criterion	Classification		
	Local	**Collector**	**Arterial**
Traffic Volume	<125	100 –1,000	>750
Heavy vehicle Percentage	Predominantly passenger cars <5% heavy trucks	<30% heavy trucks	<20% trucks
Land Access	Access is primary consideration	Traffic movement and access equally important	Access is secondary consideration
Connections	Locals Collectors	Locals Collectors Arterials	Collectors Arterials Freeways

Using the data collected and the roadway classification criteria, the roadway classification map as shown in Figure A.6.4 was created. Residential roadways which did not have traffic data collected were classified as local roadways.

The roadway classification map outlines roadway classifications based on current traffic volumes. As development occurs, and traffic volumes increase, the roadways may need to be improved and/or have classification upgrades. In Phase 2 of this project, how arterial and collector classifications could change to support development will be reviewed. The traffic volumes on roadways can be influenced through development planning and the location of connections. The connections to the highway road network including highway control of access plans and locations of permanent access points will be considered when planning roadway improvements and classification changes.

7.0 SHALLOW UTILITIES

The shallow utility review includes the following scope of work:

- Complete Sask1st call to understand the utilities located within the Study Area.
- Directly reach out to each of the identified utility providers and obtain one complete map outlining their existing infrastructure within, and around, the Study Area.

7.1 EXISTING SHALLOW UTILITY INFRASTRUCTURE

Stantec requested locations for existing shallow buried utilities which include telecommunication, power, and natural gas distribution lines and have been identified below by each known utility provider. Within the Study Area, the respective utility providers include SaskTel, SaskPower, SaskEnergy, and Shaw respectively. Existing SaskTel infrastructure is identified in Figure A.7.1. Existing SaskPower infrastructure is identified in Figure A.7.2. Existing SaskEnergy infrastructure is identified in Figure A.7.3. Existing Shaw infrastructure is identified in Figure A.7.

8.0 ISSUES IDENTIFICATION

Table 8-1 below lists the SADP background study issues, information gaps, mitigation/outcomes and recommended next steps. These gaps encompass various aspects critical to the SADP and its' future development.

Table 8-1 - Issue Identification

Impacted Discipline(s)	Issue	Information Gaps	Mitigation/Outcome	Priority based on Project Value (High, Medium, Low)	Recommended Next Steps
OVERALL	Limited available data.	Of the twenty-three (23) existing developments within the Study Area, a CDR has been completed for seven (7) of these developments.	The information gap is noted in the background study report. Additional CDRs would help have more data across the Study Area; however, overall, there still would be data gaps based on the size of the Study Area.	Low	None at this time.
Groundwater	Limited available data.	Insufficient surficial aquifer data available from WSA and SRC to produce a figure that would effectively illustrate existing conditions for future developmental purposes.	The information gaps are noted in the background study report. A groundwater existing conditions figure has not been included as part of the background study.	Low	None at this time.
Groundwater	Limited available data.	Insufficient data to complete a mass balance equation to effectively estimate, and illustrate, the amount of additional water being discharged into the surficial groundwater flow system existing conditions for future developmental purposes.	Once the preferred SADP has been selected, the mass balance equation can be completed based on the proposed SADP land use.	High	The groundwater mass balance equation can be completed and outlined in the South Development Serviceability Report.
Natural Area Screening		Wetland mapping has not been field verified/ground tethered.	Complete wetland mapping validation in advance of any proposed development near the bed, bank or boundary of any wetland or watercourse.	Low	None at this time.

Natural Area Screening		No field surveys were completed as part of the Natural Area Screening.	Complete species detection surveys in advance of any proposed development within potential habitat for plant or wildlife species of conservation concern.	Low	None at this time.
Heritage	No noted issues currently.	No information gaps were noted at this time.	N/A	N/A	N/A
Transportation	No noted issues currently.	No information gaps were noted at this time.	N/A	N/A	N/A
Potable Water	No noted issues currently.	No information gaps were noted at this time.	N/A	N/A	N/A
Drainage	No noted issues currently.	No information gaps were noted at this time.	N/A	N/A	N/A
Wastewater	No noted issues currently.	No information gaps were noted at this time.	N/A	N/A	N/A
Shallow Utilities	No noted issues currently.	No information gaps were noted at this time.	N/A	N/A	N/A

Appendix A.0

Figures for Introduction

FIGURE A0.1 - SOUTH R.M. AREA DEVELOPMENT PLAN

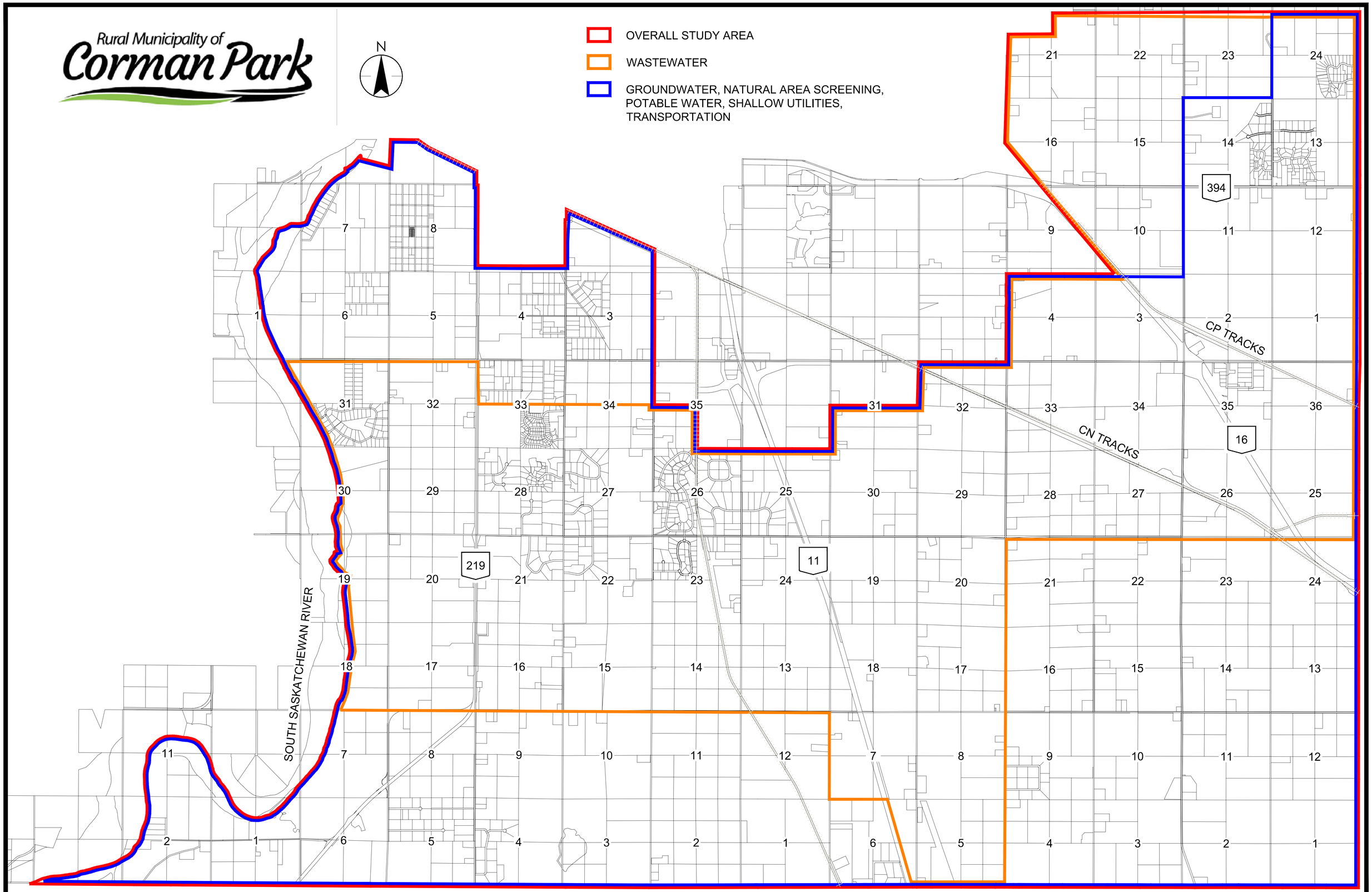

Appendix A.1

Technical Memo and Figures for 1.0 Groundwater

Stantec

Memo

To:	Amanda Conway Stantec Saskatoon	From:	Wenhui Xiong Stantec Saskatoon
File:	111000544	Date:	November 28, 2023

Reference: Groundwater Study

BACKGROUND

Stantec Consulting Ltd. (Stantec) was retained by the Rural Municipality (R.M.) of Corman Park to conduct a desktop groundwater study in the southeastern portion of the R.M. of Corman of Park (the "Study Area"), which consisted of 93 sections of land, as illustrated Figure A1 of Attachment A. The objective(s) of the groundwater study was to characterize the surficial aquifers within the Study Area, including their extents, hydrogeologic properties, current usage rate and discuss the potential for connection with deeper aquifers, where possible. A secondary objective was to identify data gaps and areas that required further assessments to meet the aforementioned objectives.

A map illustrating the Study Area is presented on Figure A1 of Attachment A.

SCOPE OF WORK

The desktop groundwater study was based on available public information and included the following scope of work:

- Identify the extents of the surficial aquifer(s) in the Study Area (if possible).
- Discuss the potential for hydraulic connections with deeper aquifers (if possible).
- Using the Water Security Agency (WSA) database, identify non-domestic pumping wells within the Study Area and indicate the source of their water, and the expected regional groundwater flow directions within the aquifer(s).
- Tabulate and map the locations of existing groundwater monitoring wells and the most recent groundwater levels, and groundwater chemistry (nutrients and chloride) results (if possible).
- Discuss the hydraulic properties of the local shallow aquifers based on review of publicly available information.
- Discuss the potential annual variability of the groundwater levels within the surficial aquifers (if possible).
- Determine potential locations for any additional recommended groundwater monitoring wells (if possible).
- Estimate and illustrate the amount of additional water being discharged into the surficial aquifer(s) from either local supply of piped potable water and/or deeper wells from nearby sewage systems (if possible).

METHODOLOGY

The desktop groundwater study was conducted by reviewing regional geological and hydrogeological information available from sources such as the WSA, the Saskatchewan Research Council (SRC) and reviewing local geological and hydrogeological information provided by the available Comprehensive Development Review (CDR) reports. The publicly available information reviewed for this groundwater study included available documents from regulatory agencies, geological and hydrogeological mapping, hydrogeological studies, previous land use planning assessments, scientific papers and the provincial water well database.

The areas that have had previous assessments and CDR reports available for review within the Study Area included:

- SE-33-35-05-W3M by Edgemont Park Estates (Crosby Hanna & Associates, 2018)
- NW & NE & SE-29-35-5-W3M by The Village Crossmount (Blackstone Land and Cattle, 2013)
- SE-24-36-04-W3M by Tuscan Ridge Estates (Whitewater Holdings, 2014)
- SE-14-36-04-W3M by Meadow Ridge Estates (AECOM, 2016)
- NW & SW-26-35-05-W3M by Grasswood Estates (K & K Land Management and Urban Elements Development Corp., 2012)
- SE-04-36-05-W3M by Bernhard Residential Development (Ken and Wendy Bernhard, 2015)
- NE-28-35-05-W3M by Ravenswood (Ravenswood Blackstone Investment, 2021)
- SW-13-36-04-W3M by Applewood Estates (AECOM, 2011)
- NW-36-35-04-W3M by 1022068225 Saskatchewan Corp. (Crosby Hanna & Associates, 2021)

It should be noted that, as shown on Figure A1 of Attachment A, the Study Area covers 93 sections, which is a significantly larger area than that which was studied by the aforementioned CDR reports. The sections with available CDRs are illustrated in Figure A1 (Attachment A).

REGIONAL GEOLOGY AND HYDROSTRATIGRAPHY

The following section discusses the regional geology and hydrostratigraphy in the Study Area. Figures illustrating various formations/aquifers are included in Figures A2 through A12 in Attachment A.

Reference: **Groundwater Study**

Regional Geology

Bedrock deposits in the Study Area include the Lea Park Formation and the Upper Colorado Group, Judith River and Bearpaw Formations and Tertiary – Quaternary sediments of the Saskatoon and Sutherland Groups (Christiansen, 1979). These are described below:

The Upper Cretaceous Lea Park Formation and the Upper Colorado Group comprises 60-300 m of gray, non-calcareous, marine silt and clay (shale) which becomes sandier as it approaches the overlying Judith River Formation. The Lea Park Formation shale constitutes the base of “freshwater” exploration associated with the shallow hydrostratigraphy in the region and is a known marker horizon for most of southern Saskatchewan (MDH Engineering Solutions Corp. (MDH) 2011). This designation is largely due to the presence of brackish water in the deeper horizons.

The Judith River Formation, where present, is a deltaic sediment which extends eastward into the marine deposits and, is composed of up to 61 m of nonmarine, interbedded fine grained sand, silt and clay (as shale). The eastern part of the Formation is less sandy suggesting that the Judith River delta did not extend very far eastward beyond the 73B (Saskatoon) map area (MDH 2011).

The Bearpaw formation includes up to 122 m of marine, noncalcareous silt and clay with a 12 m marine sand bed which occurs 76 m above the base of the formation. The Bearpaw Formation is the uppermost bedrock unit in the region conformably overlying the Judith River Formation (MDH 2011).

Over the past two million years, Saskatchewan has undergone at least eight and up to ten periods of significant glacial advance with the final deglaciation occurring between 17,000 and 10,000 years ago (Christiansen, 1979). This has resulted in a complex arrangement of proglacial and glacial sediments which are interbedded with non-glacial stratified sediments (fluvial, deltaic, lacustrine, aeolian, etc.) deposited between glaciations and during interstadial deglaciation. Erosional valleys produced during interglacial periods commonly intersect preglacial valleys (MDH 2011) These glaciofluvial, fluvial, alluvial and colluvial sediments, deposited during preglacial and interglacial periods in the valleys were covered by tills during the final stages of glaciation, forming deep buried valley aquifer systems that are flanked by more regionally extensive blanket aquifer systems which form the most significant freshwater aquifers in the province.

Glacial deposits in this area are divided into the Empress Group, Sutherland Group, Floral and Battleford Formations, Surficial Stratified Drift and Alluvium and are characterized as follows:

Stratified preglacial sediments deposited between the bedrock surface and the glacial sediments are formally called the Empress Group (Whitaker and Christiansen 1972). The Empress Group is composed of sand and gravel with a few till, silt or clay interbeds lying between bedrock and till and includes both glacial and preglacial sediments deposited in preglacial valleys. The Empress group in this area is confined mainly to bedrock valleys and glacially eroded depressions in the bedrock surface.

The Sutherland Group, which includes the Mennon, Dundurn and Warman Formations, comprises up to 122 m of till and minor amounts of stratified drift and is commonly gypsiferous.

The Saskatoon Group includes the Floral and Battleford Formations and Surficial Stratified Deposits.

The Floral Formation is composed mainly of till and silt, sand and gravel. Most of the stratified drift occurs in the basal part of the formation and constitutes one of the main occurrences of groundwater in the area.

The Battleford Formation comprises soft, unjointed and unstained till which, in some areas, includes a harder lower till. The contact between the Battleford Formation and the underlying Floral Formation is commonly marked by a well-developed boulder pavement believed to have been deposited by the glacier that deposited the Battleford Formation.

The Surficial Stratified drift includes a lower, lacustrine silt and clay and an upper deltaic sand and silt. Melting of the last glacial deposited this till plain characterized by hummocky topography of kettles and eskers, covered with glacial and glaciofluvial/glaciolacustrine deposits. Within the region, surficial deposits largely comprise colluvial, morainal plain and glaciofluvial hummocky (MDH 2011).

The stratigraphic details of the drift formations are presented on Table 1 below.

Table 1 - Drift Stratigraphy of the Study Area (MDH, 2011)

STRATIGRAPHY			LITHOLOGY		HYDROGEOLOGY
GROUP	**FORMATION**	**UNIT OR MEMBER**			
Saskatoon	Surficial Stratified Deposits	Alluvium	Silt, Sand, Gravel	Clay, Silt, Sand	Surficial Aquifer/Aquitard
			Silt, Sand, Gravel	Clay, Silt, Sand	
		Haultain	Silt, Sand, Gravel	Clay, Silt, Sand	
			Silt, Sand, Gravel	Clay, Silt, Sand	
	Battleford		Till		Aquitard
			Gravel, Sand, Silt, Clay		Battleford Aquifer
	Floral	Upper	Till		Aquitard
		Riddell (Middle)	Gravel, Sand		Upper Floral Aquifer
		Lower	Till		Aquitard
			Gravel, Sand, Silt, Clay		Lower Floral Aquifer
			Till		Aquitard
Sutherland	Warman	0.64	Till		Aquitard
			Gravel, Sand, Silt, Clay		Warman Aquifer
	Dundurn	0.70 Upper	Till		Aquitard
			Gravel, Sand, Silt, Clay		Upper Dundurn Aquifer
		0.78 Lower	Till		Aquitard
			Gravel, Sand, Silt, Clay		Lower Dundurn Aquifer
			Till		Aquitard
	Mennon	Upper	Till		Aquitard
			Gravel, Sand, Silt, Clay		Mennon Aquifer
		Lower	Till		Aquitard
Empress		Upper	Gravel, Sand, Silt, Clay (Proglacial)		Empress Group Aquifer
		Lower	Chert and Quartzite Sand on Gravel (Preglacial)		

Regional Hydrostratigraphy

Bedrock silts sands gravels and preglacial valley fill sediments form the major freshwater aquifers across Saskatchewan (MDH 2011). Groundwater typically occurs in the Judith River Formation, in a Bearpaw sand, in the Empress Group, in the Floral Sand and Gravel and in the Surficial Sand (Christiansen, 1979). In MDH (2011), seven hydrostratigraphic units were identified (MDH 2011) in the Saskatoon Area. These are included in Table 2, below:

Table 2 Hydrostratigraphic units in the Study Area

Hydrostratigraphic Unit	Hydraulic Behaviour	Lithology	Conductivity Range (metre per second (m/s))
Surficial Stratified Deposits	Aquifer / Aquitard	Gravel Sand Silt Clay	>5 x 10^{-4} 10^{-7} to 10^{-3} 10^{-7} to 10^{-6} 10^{-11} to 10^{-6}
Saskatoon Group Till Sutherland Group Till Bearpaw Formation Shale Lea Park Formation Shale	Poor Aquitard / Aquitard	Till Till Silt and Clay Silt and Clay	10^{-11} to 10^{-6} 10^{-11} to 10^{-10} 10^{-12} to 10^{-8} 10^{-10} to 10^{-12}
Saskatoon Group Aquifers	Aquifer	Gravel and Sand Gravel Sand, Silt, Clay	10^{-6} to 10^{-3} 10^{-6} to 10^{-4}
Sutherland Group Aquifers	Aquifer	Gravel & Sand Gravel, Sand, Silt, Clay	10^{-5} to 10^{-3} 10^{-8} to 10^{-3}
Empress Group Aquifer	Aquifer	Gravel & Sand Gravel, Sand, Silt, Clay	10^{-5} to 10^{-3} 10^{-9} to 10^{-3}
Bearpaw Formation Sands	Aquifer	Sand & Silt Sand, Silt, Clay	10^{-5} 10^{-4} to 10^{-9}
Judith River Formation	Aquifer	Sand & Silt	10^{-6} to 10^{-5}
Source: MDH 2011.			

Judith River Aquifer

The Judith River Formation forms a major aquifer (the Judith River Aquifer) in Saskatchewan. It is laterally discontinuous due to extensive faulting is not commonly accessed for use as a freshwater resource as its waters are highly mineralized and there are typically shallower aquifers which are more readily accessible. Groundwater flow is interpreted to be towards the South Saskatchewan River and can be strongly influenced by flow and water development within the deep Empress Group Aquifers where they incise the Judith River Aquifer. Within the region, the aquifer thickness ranges between 18.5 m and 38 m. Bulk hydraulic conductivity reportedly ranges between 1.9 x 10-6 m/s to 1.7 x 10-5 m/s, averaging 7.1 x 10-6 m/s (MDH 2011). The vulnerability to contamination from the surface is considered to be low to very low, except in places where this formation is encountered near surface or where thick overlying aquifer units are present.

Water from the Judith River Aquifer is predominantly characterized as sodium-sulphate type water but ranges between sodium- and/or calcium-bicarbonate to sodium-chloride type water. Groundwater generally exceeds the Canadian Council for Ministers of the Environment (CCME) objectives for sodium and sulphate. The objective for chloride is also periodically exceeded. Water in this unit is generally not suitable for human consumption, irrigation or livestock watering without treatment. In the Study Area, the Judith River Aquifer is present throughout the Study Area (Figure 12).

The Ardkenneth Aquifer (Bearpaw Formation)

The Ardkenneth Member of the Bearpaw Formation comprises unoxidized, generally silty, very fine- to fine-grained sand with some interbedded silts and clays (MDH 2011). It is limited in areal extent and discontinuous in the Study Area (Figure 11). It is present at depths between 46.9 m and 158.5 m below grade and is generally 15 m to 25 m thick. Bulk hydraulic conductivity has been estimated to be between 10^{-6} m/s and 10^{-4} m/s (MDH 2011). Information on groundwater flow is limited but is likely toward the South Saskatchewan River and may be locally complex where there is structure introduced by salt dissolution collapse. The aquifer is not considered to be vulnerable to contamination form the surface.

MDH (2011) notes that there were no third party reports available regarding groundwater availability from the Ardkenneth Aquifer. Only two wells are interpreted to e installed into this unit and pumping tests were not successful. Therefore, it is not a recommended target for water supply. Based on the limited information available, the groundwater is sodium-sulphate type water, exceeding the CCME drinking water quality objectives for both sodium and sulphate and the aesthetic objective for chloride. It is generally not considered suitable for human consumption nor for irrigation or livestock watering without treatment.

The Cruikshank Aquifer (Bearpaw Formation)

The Cruikshank Member of the Bearpaw Formation comprises unoxidized, silty, very fine- to fine-grained sand with some interbedded silts and clays (MDH 2011). It is limited in areal extent and discontinuous in the Study Area (Figure 11) and present in association with down faulting associated with salt dissolution collapse structures. It is present at depths between 51 m and 100.6 m below grade and is generally between 9 m to 22.6 m thick. Bulk hydraulic conductivity data was not available for the Cruikshank aquifer but is anticipated to be similar to the Ardkenneth Aquifer. Information on groundwater flow is not available but lateral flow would be influenced by the groundwater flow in the overlying and underlying stratified deposits The aquifer is not considered to be vulnerable to contamination form the surface.

MDH (2011) notes that there were no third party reports available regarding groundwater availability from the Cruikshank Aquifer. Due to its limited areal extent; however, it should not be targeted for water supply.

Empress Group Aquifer

Sands and gravels of the Empress Group infill portions of pre-glacial valleys and form some of the largest freshwater aquifer systems in the province. The Empress Group Aquifer is present in a limited area on the eastern side of the Study area as the Meacham Aquifer. It is specifically located in Sections 25, 35, and 36-35-04-W3M, N1/2-24-35-04-W3M, E1/2-26-35-04-W3M, S1/2-01-36-03-W3M, and SE-02-36-03-W3M (Figure 10). The Empress Group Aquifer is commonly exploited for industrial, municipal and domestic water use. Bulk hydraulic conductivities generally range between 10-5 m/s and 10-4 m/s.

Groundwater is recharged by downward flow through overlying strata and lateral flow from interconnected aquifers, including the Judith River aquifer (MDH 2011). Vertical flow is significantly less than lateral groundwater flow and vertical recharge is slow due to the presence of thick, low permeability confining layers (till and marine shales). Lateral groundwater flow in the Meacham Aquifer is east-southeasterly toward the Hatfield Valley Aquifer system. Groundwater is generally sodium-sulphate type water and not considered to be potable without treatment.

The Mennon Aquifer (Sutherland Group)

The Mennon aquifer is present in the northeast corner of the Study area and is of limited areal extent and is located within sections 01, 11, 12, and 13-22-36-03-W3M, NE-02-36-03-W3M, and SE-24-36-03-W3M (Figure 9). It generally overlies the lower till unit of the Mennon Formation or can sit directly on bedrock surface. The aquifer comprises gravel, sand, silt and clay and has a bulk hydraulic conductivity on the order of 10-6 m/s to 10-4 m/s in the sands and gravels. It has been reported to range between 0.6 m and 36.6 m in thickness. There is not extensive use of this aquifer and therefore limited information on groundwater availability. The vulnerability of the aquifer to surface contamination is considered to be low.

Groundwater type varies in the Mennon aquifer with the most common types being calcium-bicarbonate, sodium sulphate and calcium-sulphate type waters (MDH 2011). Concentrations of sodium and sulphate often exceed CCME aesthetic objectives with some reported exceedances of chloride as well. The water type is similar to that of the Empress Group Aquifer.

The Dundurn Aquifer (Sutherland Group)

A complex arrangement of gravel, sand, silt and clay comprises the Dundurn Aquifer. The Lower Dundurn aquifer is located in the northeast corner and in the northwest quadrant of the Study Area within sections 01, 11, 12, and 13-22-36-03-W3M, NE-02-36-03-W3M, section 03-36-05-W3M, and S1/2-10-36-05-W3M (Figure 8). The Upper Dundurn Aquifer is predominantly located in the northeast corner of the Study Area within sections 15 and 22-35-04-W3M, W1/2-23-35-04-W3M, W1/2-14-35-04-W3M, E1/2-35-04-W3M, NE-16-35-04-W3M, N1/2-12-36-03-W3M, SE-13-36-03-W3M, NE-04-36-03-W3M, and NW-03-36-03-W3M (Figure 7). The Lower and Upper Dundurn Aquifers have been reported to be up to 50.6 m and 67.7 m thick, respectively. Hydraulic conductivity of the gravel and sands is expected to be on the order of 10-6 to 10-4 m/s in the Lower Dundurn and 10-4 m/s to 10-3 m/s in the Upper Dundurn with significantly lower conductivity in the silt and clay deposits.

Groundwater in the Dundurn aquifer is not considered to be potable and commonly exceeds the CCME objectives for total dissolved solids, sodium and sulphate (MDH 2011). Without treatment, the water from the Lower Dundurn aquifer is not suitable for human consumption, irrigation or for livestock supply. Similarly, groundwater in the Upper Dundurn is considered not suitable for consumption (without treatment) and is very hard and sulphate rich. The vulnerability of these aquifers to surface contamination is considered to be low to very low.

The Warman Aquifer (Sutherland Group)

The Warman Aquifer is generally located at the contact between the Warman Formation and the underlying Dundurn Formation and is a complex arrangement of gravel, sand, silt and clay (MDH 2011). The aquifer is present in a very limited extent on the eastern edge of the Study Area within NE-24-35-04-W3M and E1/2-25-35-04-W3M (Figure 6) which aligns with its tendency to occur as isolated intertill stratified deposits. The aquifer has been reported at thicknesses up to 39 m and occurs at an average depth of 8.5 m below grade. Hydraulic conductivity data is not available for the Warman aquifer but can be expected to range between 10-6 m/s and 10^{-4} m/s in sand and gravel units and be significantly less in silt and clay units. Groundwater flows towards the river valleys. The Warman Aquifer is characterized as calcium-sulphate type water with exceedances of the CCME water quality objectives for sulphate and sodium commonly occurring.

Floral Formation Aquifer (Saskatoon Group)

Interbedded stratified deposits which occur at the contact between the Sutherland Group and the Saskatoon Group are referred to as the Lower Floral Formation Aquifer whereas interbedded stratified deposits occurring at the contact between the upper and lower till units of the Floral Formation are called the Upper Floral Formation Aquifer (MDH 2011). The Upper Floral Formation aquifer may be hydraulically connected to the Lower Floral Aquifer at several locations and the two units are lithologically similar. These units can form important aquifers, including the Forestry Farm Aquifer which is near the region. The Lower Floral Aquifer is present beneath the northwestern and northeastern corners of the Study Area, within E1/2-01-36-06-W3M, sections 06 and 07-36-05-W3M, W1/2-05-36-05-W3M, W1/2-08-36-05-W3M, sections 01, 02, 03, 11, 12, 13, 14, and 24-36-03-W3M, and sections 25, 35, 36-35-04-W3M, and E1/2-26-35-04-W3M, and NE-34-35-04-W3M (Figure 5). The Upper Floral Aquifer is present beneath the northeastern and southwestern corners of the Study Area withinE1/2-18-35-05-W3M, E1/2-19-35-05-W3M, 20-35-05-W3M, NW-17-35-05-W3M, E1/2-01-36-06-W3M, N1/2-13-36-03-W3M, N1/2-14-36-03-W3M, and 24-36-03-W3M (Figure 4).

The Upper and Lower Floral Formation Aquifers are recharge by infiltration of meteoric water through the Surficial Aquifer and Battleford Aquifers predominantly via depression focussed recharge (MDH 2011). Groundwater flow is generally downward to and from this aquifer toward s the underlying formations. Horizonal groundwater flow is typically toward the nearest river valleys. The Upper Floral Aquifer is a water source used mainly for municipal purposes. Groundwater is characterized as a calcium-sulphate, calcium-bicarbonate, sodium-sulphate and calcium magnesium-sulphate type water. The Floral Formation Aquifers are considered to be highly vulnerable to surface derived contamination due to their proximity to the surface.

Battleford Aquifer (Saskatoon Group)

The Battleford Aquifer is formed in stratified sediments at the contact between the Battleford and Floral Formation (MDH 2011). The aquifer has been interpreted to occur at depths between surface and 42 m below grade but is, on average, encountered at depths of approximately 3.3 m. Within the region, the Battleford Aquifer ranged between 0 and 10 m thick. It is typically shallow, relatively thin and discontinuous. Groundwater flow is strongly influenced by topography and generally focused towards local sloughs and depressions and is recharged by infiltrating meteoric water. The Battleford Aquifer is present within the majority of the Study Area, except 17-35-05-W3M, 20-35-05-W3M, E1/2-19-35-05-W3M, E1/2-18-35-05-W3M, and N1/2-31-35-05-W3M (Figure 3).

The Battleford Aquifer is generally not used as a water supply due to its discontinuous nature and shallow depth. Groundwater from this aquifer is calcium-magnesium-bicarbonate (recharge zones) to calcium-magnesium-sulphate type water (discharge zones). Because of it shallow nature, the Battleford Aquifer has high to very high aquifer vulnerability for contamination from the surface.

Surficial Aquifer

The Surficial Stratified Deposits have been encountered at thicknesses of up to 97 m but average 11.4 m thick (MDH 2011) and generally present across the Study Area (Figure 2). Within the region, the aquifer deposits range between 0 m and 10 m thick. Many towns and rural municipalities use the Surficial Aquifer for water supply and sustainable yield is largely dependent on the thickness, areal extent, recharge rate and available drawdown which can vary across the area. Groundwater flow is strongly influenced by topography and is locally focused towards sloughs and depressions and regionally towards lakes and river valleys. Recharge is dominated by infiltration of meteoric water. Bulk hydraulic conductivity is generally between 10^{-3} m/s and 10^{-4} m/s.

Groundwater in the Surficial Aquifer is relatively fresh and characterized as calcium-magnesium-bicarbonate type water (MDH 2011). The water quality changes with residence time becoming more highly mineralized near discharge areas. Groundwater in the Surficial Aquifer has high vulnerability to contamination from a surface source (MDH 2011)

Potential for Hydraulic Connection with Deeper Aquifers

The Bearpaw and the underlying Judith River Aquifer are the only aquifers which are generally present throughout the Study Area. Therefore, the potential for hydraulic connection to the upper Bearpaw Aquifer will be the focus of this discussion.

The depth of the Bearpaw Ardkenneth Aquifer ranges from approximately 62.9 m below grade level (mBGL) to 158.5 mBGL (MDH, 2011b). The shallowest depth of the Bearpaw Ardkenneth Aquifer was observed in borehole 45301 of cross section F-F' (MDH, 2011b). Borehole 45301 intersects the following strata: the Surficial Stratified Deposits, the Battleford till (15 m), the Upper Dundurn till (5 m), the Bearpaw Snakebite silt and clay (13 m), the Bearpaw Ardkenneth Aquifer and the Judith River Aquifer. At this location, there is more than 30 m of fine grained material that could be considered to be an aquitard, present between the Surficial aquifer and the Bearpaw Ardkenneth Aquifer and the Judith River Aquifer. The CDR report of Tuscan Ridge Estates (Whitewater Holdings, 2014) reported the horizontal hydraulic conductivity values of the Battleford till that ranged between 2×10^{-9} m/s (monitoring well 13-01) to 9×10^{-9} m/s (monitoring well 13-10). Vertical gradients are generally accepted to be at least one order of magnitude lower than horizontal gradients

(Freeze and Cherry 1979) and therefore vertical conductivity would be at least one order of magnitude less than the conductivity of lateral groundwater flow. The low hydraulic conductivity values of the tills and their cumulative thickness (greater than 30 m) are expected to provide adequate hydraulic isolation from the Surficial aquifer to the Bearpaw Ardkenneth Aquifer and the Judith River Aquifer. Therefore, the hydraulic connection from the Surficial aquifer to the deeper aquifers (the Bearpaw Ardkenneth Aquifer and the Judith River Aquifer) appears unlikely.

Annual Variability of Groundwater Levels in the Surficial Aquifer

A WSA observation well, Goodale Farm 009 (WWDR# 120923), is located in the southwest quarter of Section 04, Township 36, Range 04, and West of the 3rd Meridian (SW-04-36-04-W3M) and is within the Study Area. This observation well was installed in 1974 to a depth of 10.06 mBGL and completed in the Surficial Aquifer. The observation well is used to observe natural groundwater level fluctuations. The long-term groundwater level variations over a period from 1974 to 2022 are presented on Figure 1 below.

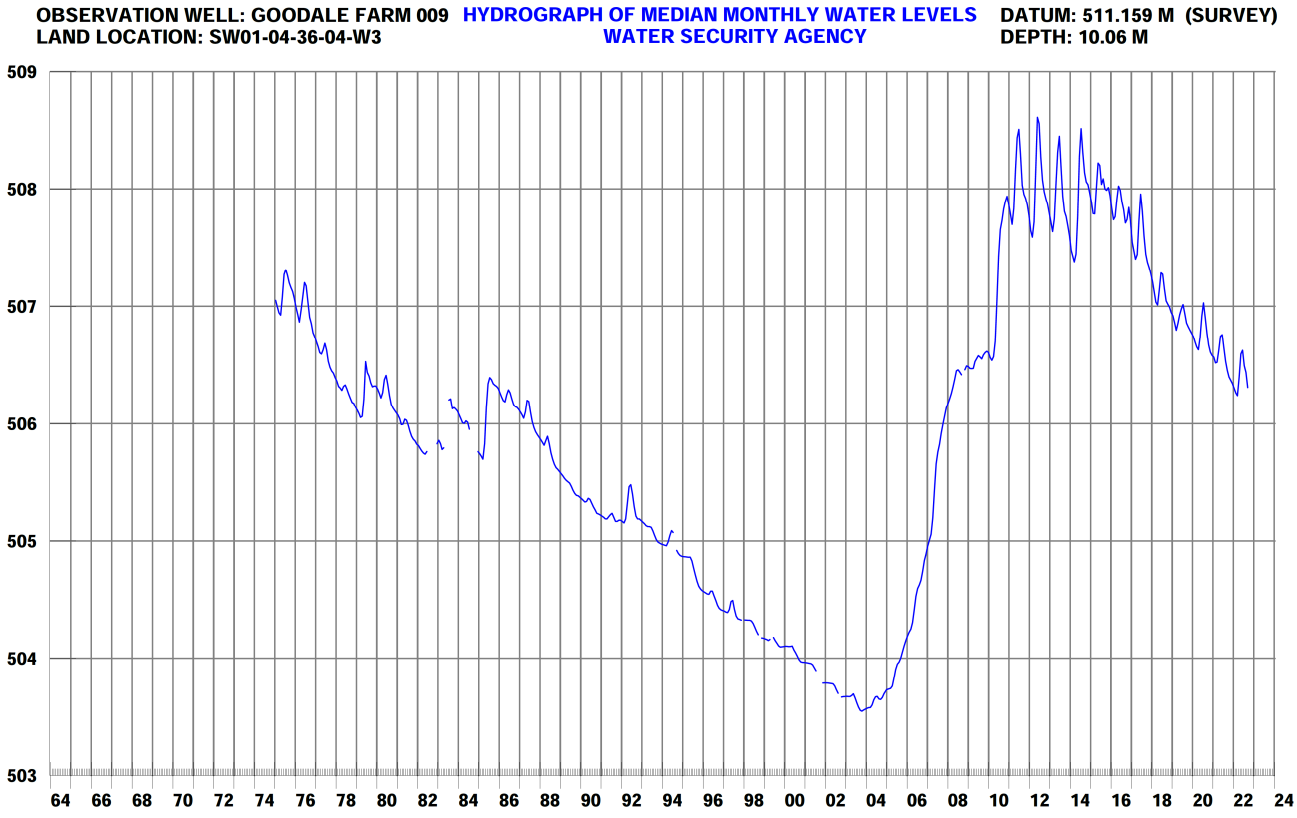

Figure 1 Groundwater Level Variations From 1974 to 2022 (WSA, 2023b)

As illustrated in Figure 1, within two years of the start of monitoring in 1974, water levels began a long term decline, which lasted until 2003. The groundwater elevation dropped from close to 507 m above sea level (mASL) to a record low of 503.5 mASL (WSA, 2023b). However, following that decline water levels began to increase dramatically, reaching a record high of about 508.5 mASL in 2012 and fluctuating seasonally until 2016. Since 2016, the groundwater elevation has continued to decline through 2022. The relatively significant

groundwater level variations over the long time period can be attributed to the interaction between groundwater and surface water (nearby sloughs) and “depression-focused” groundwater recharge and discharge (WSA, 2023b) and may be resulting from larger scale climate changes.

The Surficial Aquifer is an unconfined aquifer and therefore contains a water table that fluctuates in response to recharge (USACE, 1999). The WSA (2023b) reported that seasonal minimums in the observation well (Goodale Farm 009) typically occur in March-April with maximum elevations reported in June-July. The groundwater recharge was mainly concentrated in the period from June to July, resulting in the highest groundwater levels.

Although the Goodale Farm 009 well cannot be fully representative of the Surficial Aquifer in the Study Area, its groundwater monitoring data (WSA, 2023) indicated the following three major factors determining the groundwater level variability in the Surficial Aquifer;

1) The interaction between groundwater and surface water;
2) The “depression-focused” groundwater recharge and discharge; and
3) the seasonal recharge and discharge.

Since the three major factors are likely present in the Study Area, potential annual variability of groundwater levels within the Surficial Aquifer is expected to be present.

NON-DOMESTIC PUMPING WELLS WITHIN THE STUDY AREA

A total of 93 water wells (non-domestic) installed as observation wells or water test holes were identified in the Water Security Agency of Saskatchewan (WSASK) data portal on June 9, 2023 (WSA, 2023c). Details of the 93 wells or test holes are provided in Table B1 of Attachment B and the approximate location of non-domestic pumping wells located within the Study Area are illustrated in Figure A13 of Attachment A.

As illustrated in Table B1 of Attachment B, screened interval details were provided on the Water Well Driller Reports (WWDRs) for 18 of the 93 wells. Based on the WWDR, the water sources for the 18 non-domestic pumping wells are summarized in Tale 3, below. The corresponding WWDR are provided in Attachment C.

Table 3 Water Sources of 18 Non-Domestic Pumping Wells

WWDR#	Screened Interval (mBGL)	Screened lithology
43761	4.6 to 5.8	Surficial Aquifer
43762	3.7 to 4.6	Surficial Aquifer
43766	5.5 to 6.7	Surficial Aquifer
43767	4.0 to 4.9	Surficial Aquifer
43769	8.5 to 10	Unknown
43770	6.4 to 7.3	Battleford Formation till
46738	18.3 to 19.8	Lower Floral Aquifer
46739	31.3 to 32.6	Lower Floral Aquifer
210584	16.2 to 17.4	Unknown
210585	31.1 to 32.0	Unknown
211197	92.7 (bottom of screen)	Bearpaw Ardkenneth Aquifer
211198	37.8 (bottom of screen)	Upper Dundurn Aquifer
225555	2.1 to 5.2	Surficial Aquifer
238033	2.1 to 10.1	Surficial Aquifer
241009	4.9 to 15.5	Surficial Aquifer
241196	7.6 to 12.2	Surficial Aquifer
241698	7.9 to 16.5	Surficial Aquifer

Notes:
WWDR – Water Well Drilling Report
mBGL – meters below ground level

As shown in Table 3, the water sources for the non-domestic pumping wells include Surficial Aquifer, Lower Floral Aquifer, Upper Dundurn Aquifer, and Bearpaw Ardkenneth Aquifer.

Groundwater flow within the Surficial Aquifer is strongly topographically influenced. The groundwater flow pattern within the Surficial Aquifer in the Study Area is anticipated to be generally towards Patience Lake (located northeast of the Study Area) combined with depression focused flow to sloughs and groundwater flow towards the South Saskatchewan River (located west of the Site).

EXISTING GROUNDWATER MONITORING WELLS WITHIN THE STUDY AREA

Between 2010 and 2017, 83 monitoring wells were reportedly installed within the Study Area based on the available CDRs. The location of groundwater monitoring wells installed within the Study Area are shown on Figure A14 of Attachment A and details of the existing groundwater monitoring wells are provided in Table B2 of Attachment B.

Reference: Groundwater Study

A single round of groundwater monitoring and sampling was completed for each of the CDR investigations. The current status of the groundwater monitoring wells is unknown at this time due to the monitoring wells not being registered with the WSA. The WSA.does not monitor wells that are privately owned, i.e., developers, landowners, etc. Groundwater monitoring results obtained from the available CDR reports are summarized below:

- Depths to groundwater measured on December 12, 2013, at the Tuscan Ridge Estates ranged from 1.1 mBGL to 17.7 mBGL. The reported groundwater flow direction was to the southeast (Whitewater Holdings, 2014).
- Depths to groundwater measured on April 17, 2017, at the Edgemont Park Estates ranged from 1.72 mBGL to 2.82 mBGL. The reported groundwater flow direction was to the northeast and east (Crosby Hanna & Associates, 2018).
- Depths to groundwater measured on September 11, 2014, at the Meadow Ridge Estates ranged from 2.25 mBGL to 4.73 mBGL. The reported groundwater flow direction was to the south (AECOM, 2016).
- Depths to groundwater measured at the Grasswood Estates on February 25, 2008 ranged from 2.02 mBGL to 6.75 mBGL. The reported groundwater flow direction was to the southeast (K & K Land Management and Urban Elements Development Corp, 2012).
- Depths to groundwater measured on May 27, 2014 at the Bernhard Residential Development ranged from 1.38 mBGL to 3.03 mBGL. The reported groundwater flow direction was to the southeast (Ken and Wendy Bernhard. 2015).

Nitrate and chloride groundwater analytical results were available for 42 of 83 monitoring wells from the available CDR reports. The results are summarized below and included in Table B2.

- Nitrate concentrations ranged from less than the laboratory reportable detection limits (RDL) (<0.5 mg-N/L) to 11.8 mg-N/L and chloride concentrations ranged from 4.6 mg/L to 138 mg/L at the Tuscan Ridge Estates on December 12, 2013 (Whitewater Holdings, 2014).
- Nitrate concentrations ranged from less than the laboratory RDL (<0.5 mg-N/L) to 50.6 mg-N/L and chloride concentrations ranged from 3.7 mg/L to 122 mg/L at the Meadow Ridge Estates on September 11, 2014 (AECOM, 2016).
- Nitrate concentrations ranged from less than the laboratory RDL (<0.5 mg-N/L) to 51 mg-N/L and chloride concentrations ranged from 1 mg/L to 101 mg/L at the Grasswood Estates on July 4, 2012 (K & K Land Management and Urban Elements Development Corp., 2012).

Some of the reported nitrate concentrations exceeded Canadian Drinking Water Quality Guidelines (Health Canada, 2022) from some locations at the CDR investigation areas. Sources of anthropogenic nitrate contamination to groundwater include septic system effluent, domestic animal waste, and home and farm usage of nitrogen fertilizer. Land use in the Study Area currently includes agricultural, commercial, and residential. Therefore, the elevated nitrate concentrations could be a result of any of the anthropogenic inputs discussed above.

The chloride concentrations at the three CDR investigation sites were generally consistent and met the applicable guidelines, suggesting that chloride impacts to groundwater may not be historically present within the Study Area. However, there is potential for increased chloride concentrations resulting from increased land development and the likely increase in the use of road salt within these developments.

Recommended Groundwater Monitoring Wells

Nitrate impacts to groundwater were identified in three of the nine CDR reports. These reported nitrate impacts are potentially attributable to animal wastes and land application of fertilizer as a result of agricultural land use. With the potential future residential developments in the Study, more nitrate sources including septic systems will be introduced. Because nitrate impacts have been identified in previous studies within the Study Area, careful consideration should be given to siting of development and the associated septic systems.

Additional nitrate loading in the Surficial Aquifer could result in downward migration of the nitrate impacted groundwater into the deeper aquifers. A thick sequence of till aquitards is generally present between the Surficial Aquifer and the Bearpaw Ardkenneth Aquifer and the Judith River Aquifer. However, where present the shallower aquifers, such as the Battleford Aquifer and the Upper Floral Aquifer, may not have the same thickness of aquitard overlying them to impede downward migration of groundwater from the surficial aquifer. To determine the vulnerability of the Battleford and Upper Floral Aquifers to nitrate impacts in the Surface Aquifer, additional groundwater monitoring wells are recommended to be installed in areas where future developments are anticipated or currently have higher densities within the Study Area specifically targeting the Battleford Aquifer and the Upper Floral Aquifer. These wells should be used to monitor and/or assess groundwater quality as well as the potential for downward migration of contaminants and the associated aquifer vulnerability.

HYDRAULIC PROPERTIES OF LOCAL SHALLOW AQUIFERS

A complex arrangement of stratified post-glacial sediments comprises the Surficial Stratified Deposits. These deposits have been encountered in an average thickness of approximately 11 m in the region of Saskatoon. The lithological composition including gravels, sands, silts, and clays is highly variable. (MDH,2011a).

Hydraulic properties for the Surficial Aquifer (primarily sand members) in the region of Saskatoon were reported by MDH (2011a) to be:

- Transmissivity – 130 m^2/day to 4,000 m^2/day
- Storativity – 0.003 to 0.20
- Hydraulic conductivity – 2.6×10^{-4} m/s to 2.2×10^{-3} m/s

A total of 83 groundwater monitoring wells were installed within the Surficial Stratified Deposits as indicated in the available CDR reports. Slug tests which intended to measure hydraulic conductivity values were completed at select monitoring wells, which were screened within the Surficial Aquifer. The hydraulic conductivity values estimated by the slug tests are considered as one of hydraulic properties of the surficial aquifer within the Study Area. The reported hydraulic conductivity values are summarized in Table 2.

Table 2 Measured Hydraulic Conductivity of Surficial Aquifers

Monitoring Well	Screen Interval (mBGL)	Location	Hydraulic Conductivity (m/s)
RW-14-002S[1]	1.5 – 3.0	SE-14-36-04-W3M	2.5×10^{-6}
RW-14-003S[1]	1.5 – 3.0	SE-14-36-04-W3M	4.9×10^{-6}
RW-14-004S[1]	1.5 – 3.0	SE-14-36-04-W3M	3.9×10^{-6}
RW-14-005S[1]	1.5 – 3.0	SE-14-36-04-W3M	3.1×10^{-4}
RW-14-011S[1]	1.5 – 3.0	SE-14-36-04-W3M	1.6×10^{-5}
BH201[2]	3.0 – 4.8	W1/2-26-35-05-W3M	1.1×10^{-5}
BH203[2]	3 .0 - 4.8	W1/2-26-35-05-W3M	1.2×10^{-6}
BH204[2]	3.0 – 4.8	W1/2-26-35-05-W3M	1.5×10^{-5}
BH207[2]	3.0 – 4.8	W1/2-26-35-05-W3M	4.5×10^{-6}
BH208[2]	3.0 – 4.8	W1/2-26-35-05-W3M	1.3×10^{-5}
BH210[2]	3.0 – 4.8	W1/2-26-35-05-W3M	1.1×10^{-5}
BH211[2]	4.0 - 5.5	W1/2-26-35-05-W3M	1.6×10^{-6}

Notes:
[1] – AECOM. 2016. Meadow Ridge Estates Comprehensive Development Review
[2] - K & K Land Management and Urban Elements Development Corp. 2012. Comprehensive Development Review – Grasswood Estates.
mBGL – meters below ground level

The measured hydraulic conductivity values of the Surficial Stratified Deposits ranged from 1.2×10^{-6} m/s to 3.1×10^{-4} m/s (AECOM, 2016; K & K Land Management and Urban Elements Development Corp, 2012), which was lower than the reported range by MDH (2011a) (2.6×10^{-4} m/s to 2.2×10^{-3} m/s). Saskatchewan Ministry of Environment (SKMOE) [2016] suggested that for a geologic unit to meet the definition of a potential water aquifer (PWA), it must have a bulk hydraulic conductivity of 1×10^{-6} m/s or greater and sufficient thickness to support a sustained yield of 0.76 L/min or greater. Therefore, the Surficial Stratified Deposits which was investigated meets the hydrogeological criterion for an eligible PWA.

Although the Surficial Stratified Deposits may be able to provide a sufficient water supply to meet the needs of a typical domestic supply, the water quality may not meet the applicable domestic use criteria. SKMOE (2016) also provides the water quality criterion of the eligible PWA (the PWA does not contain chemical constituents that make the water unsafe for human consumption or contain constituents that render the water undesirable aesthetically if those constituents cannot be removed). Health Canada (2021) further suggested that concentration of total dissolved solids (TDS) cannot be greater than 4,000 mg/L in an eligible potable aquifer. For example, the TDS concentration reported at well RW-14-001S (15,200 mg/L) was greater than the TDS criterion (4,000 mg/L) for an eligible PWA (K & K Land Management and Urban Elements Development Corp., 2012). In addition, total coliform population was reported to be more than 200.5 most possible number (MPN)/100 mL at wells RW-14-001S to RW-14-005S, and RW-14-011S (AECOM, 2016), which may result in unsafe human consumption. Although groundwater analytical results obtained from the CDR reports are limited, in comparison to the scale of the Study Area , several groundwater quality studies conducted in Saskatchewan consistently indicated that 1) shallow groundwater resources in Saskatchewan are commonly mineralized; 2) nitrates can accumulate in the groundwater resources over time; and 3) shallow aquifers are more susceptible to bacteriological contamination (Klappsteina and Rostron, 2014; Mollahosseini and Abdelrasoul, 2019; Fortin et al., 1991). For these reasons, the surficial aquifer in the Study Area is potentially less desirable as a potential PWA although more local-scale investigations are required.

EVALUATION OF THE AMOUNT OF ADDITIONAL WATER BEING DISCHARGED

The amount of additional residential or commercial wastewater being discharged into the Surficial Aquifer would be calculated using a water mass balance approach, based on the proposed water demand, and the current effluent discharge amount. The below equation conceptually provides the water mass balance calculation:

$$Additional\ Discharge = Water\ Demand - Existing\ Discharge$$

In order to estimate the additional water being discharged, as shown in the above equation, the water demand needs to be calculated. The proposed water demand can be estimated based on the predicted population in the Study Area. However, the land use plan wa\s unavailable at the time of this study, therefore proposed water demand could not be estimated. Similarly, it was not possible to estimate the amount of discharge that could enter the aquifer without the same information. It is recommended that these input parameters be determined so a representative mass balance can be calculated for the Study Area in the future.

Reference: **Groundwater Study**

SUMMARY

The following summarizes the Technical Memo results and identifies potential data gaps.

- The extents of the Surficial Aquifer were identified where possible. However, due to the scale of Study Area further information is required at a Site level scale to accurately determine the extents. The Surficial Stratified Deposits at select locations in the Study Area may be able to provide a sufficient water supply to meet the needs of a typical domestic supply; however, the water quality may not meet the applicable domestic use criteria. SKMOE (2016) also provides the water quality criterion of the eligible PWA. The PWA does not contain chemical constituents that make the water unsafe for human consumption nor does it contain constituents that render the water undesirable aesthetically. Elevated TDS concentrations were reported in monitoring wells in the Study Area suggesting the surficial aquifer is not optimal for use as a PWA. More information, such as groundwater monitoring and analytical data may be required to support or refute this observation.

- The potential for hydraulic connections with deeper aquifers generally appears to be limited in those areas of the Study Area associated with potential aquitards. The low hydraulic conductivity values of the tills (aquitards) and their cumulative thickness (greater than 30 m) are expected to provide sufficient hydraulic isolation between the Surficial Aquifer and the Ardkenneth Aquifer (Bearpaw formation) and the Judith River Aquifer. Due to the scale of the Study Area, further investigation may be required in areas with future development or areas of concern/interest to confirm.

- A total of 93 non-domestic pumping wells were identified within the Study Area; 18 of the 93 wells reported a known screened interval. Based on the WWDRs, the water sources for the non-domestic pumping wells included Surficial Aquifer, Lower Floral Aquifer, Upper Dundurn Aquifer, and Bearpaw Ardkenneth Aquifer. The expected regional shallow groundwater flow within the Surficial Aquifer(s) is expected to generally follow the topography in the Study Area. This should be reviewed as additional data becomes available..

- Chloride and nitrate data from a single monitoring event completed at 42 of the 83 monitoring wells presented in the CDRs were reviewed. Chloride concentraitons were generally consistent and met the applicable guidelines. Several nitrate exceedances were identified in these wells, therefore nirate may be a risk for groundwater consumption. It is recommended that the existing monitoring network be monitored and sampled to evaluate the variability of the local groundwater conditions over time. Additional groundwater monitoring wells may be required in areas of higher development to obtain baseline conditions and to monitor potential changes over time to the surficial aquifers and underlying aquifers (if any).

- Hydraulic properties for the Surficial Aquifer (primarily sand members) in the region of Saskatoon were reported by MDH (2011a) to be:
    - Transmissivity range of 130 m^2/day to 4,000 m^2/day
    - Storativity range of 0.003 to 0.20
    - Hydraulic conductivity range of 2.6×10^{-4} m/s to 2.2×10^{-3} m/s
    - Groundwater analytical results obtained from the CDR reports are limited, in comparison to the scale of the Study Area, several groundwater quality studies conducted in Saskatchewan

consistently indicated that 1) shallow groundwater resources in Saskatchewan are commonly mineralized; 2) nitrates can accumulate in the groundwater resources over time; and 3) shallow aquifers are more susceptible to bacteriological contamination. Therefore, the surficial aquifer in the Study Area is potentially less desirable as a potential PWA although more local-scale investigations are required.

- The potential annual variability of the groundwater levels within the surficial aquifers was discussed; however, there was no long term representative monitoring data available within the Study Area. One WSA observation well was completed in the shallow Aquifer and has been monitored since 1974. Static water levels at this location showed an initial decrease which continued until 2004, followed by a rapid increase in static water level to a maximum in 2012. Static water levels varied seasonally between 2012 and 2016, after which the groundwater elevation has continued to decline through 2022. The groundwater level variations over the long time period are thought to be attributable to the interaction between groundwater and surface water (nearby sloughs) and “depression-focused” groundwater recharge and discharge (WSA, 2023b). This observation well is not representative of the Surficial Aquifer in the entire Study Area and a larger monitoring well network is required to determine the varying or consistent conditions over time.

- Additional recommended groundwater monitoring wells have been recommended to be installed in areas where nitrate loading may be occurring (developed areas/higher density areas). These include within the Battleford Aquifer (17-35-05-W3M, 20-35-05-W3M, E1/2-19-35-05-W3M, E1/2-18-35-05-W3M, and N1/2-31-35-05-W3M. and/or the Upper Floral Aquifer (E1/2-18-35-05-W3M, E1/2-19-35-05-W3M, 20-35-05-W3M, NW-17-35-05-W3M, E1/2-01-36-06-W3M, N1/2-13-36-03-W3M, N1/2-14-36-03-W3M, and 24-36-03-W3M). Monitoring well installations could be and should be planned to target specific areas where future developments are planned or with higher population densities within the Study Area.

- It was not possible to estimate the amount of additional water being discharged into the surficial aquifer(s) from either local supply of piped potable water and/or deeper wells from nearby sewage systems with the available information at this time. The volume of additional residential or commercial wastewater discharged into the Surficial Aquifer may be calculated using a mass balance approach. This would be based on the proposed water demand based on the predicted population of the Study Area and the current effluent discharge amount. A land use plan was unavailable at the time of this study therefore the proposed water demand could not be estimated as part of this Study. It is recommended that the future inputs to the mass balance are considered for further evaluation in the future.

REFERENCES

AECOM Canada Ltd. (AECOM). 2011. Applewood Estates Comprehensive Development Review.

AECOM. 2016. Meadow Ridge Estates Comprehensive Development Review.

Alberta Environment and Parks (AEP). 2022. Alberta Tier 2 Soil and Groundwater Remediation Guidelines.

Blackstone Land and Cattle Ltd. (Blackstone Land and Cattle). 2013. Draft Comprehensive Development Review – The Village at Crossmount.

Crosby Hanna & Associates. 2018. Final Comprehensive Development Review – Edgemont Park Estates.

Crosby Hanna & Associates. 2021. Comprehensive Development Review - 1022068225 Saskatchewan Corp.

Fortin, G., van der Kamp, G., Cherry, J. A. 1991. Hydrogeology and Hydrochemistry of an Aquifer-Aquitard System within Glacial Deposits, Saskatchewan, Canada. Journal of Hydrology, 126, 265-292.

Freeze, R. A., Cherry, J. A. 1979. Groundwater. Prentice-Hall, Inc., Englewood Cliffs, New Jersey 07632.

Health Canada. 2021. Federal Contaminated Site Risk Assessment in Canada Part I: Guidance on Human Health Preliminary Quantitative Risk Assessment (PQRA), Version 2.0.

Health Canada. 2022. Guidelines for Canadian Drinking Water Quality.

K & K Land Management and Urban Elements Development Corp. 2012. Comprehensive Development Review – Grasswood Estates.

Ken and Wendy Bernhard. 2015. Draft Comprehensive Development Review – Bernhard Residential Development.

Klappsteina, G. and Rostron, B. 2014. Shallow hydrogeological and hydrochemical characterization of the Aquistore CO2 sequestration site in Estevan, Saskatchewan, Canada. Energy Procedia, 63, 4971-4976.

McMartin, D. W., Gillies, J. A., Sloan, M. J. 2001. Impact of Irrigation with Poor Quality Groundwater on Saskatchewan Soils. Canadian Water Resources Journal, 26, 71-90.

MDH Engineered Solutions (MDH). 2011a. Hydrogeology Mapping of NTS Mapsheet Saskatoon 73B.

MDH. 2011b. Interpreted Thickness and Areal Limits of the Bearpaw Formation Ardkenneth Member (Kba) 73B NTS Mapsheet.

Mollahosseini, A. and Abdelrasoul, A. 2019. Recent Advances in Thin Film Composites Membranes for Brackish Groundwater Treatment with Critical Focus on Saskatchewan Water Sources. Journal of Environmental Science, 81, 181-194.

Ravenswood Blackstone Investment. 2021. Ravenswood Comprehensive Development Review.

Saskatchewan Ministry of Environment (SKMOE). 2016. Endpoint Selection Standard, Saskatchewan Environmental Code.

U.S. Army Corps of Engineers (USACE). 1999. Groundwater Hydrogeology.

Water Security Agency (WSA). 2023a. https://www.wsask.ca/mapsheet/saskatoon-mapsheet-73b/, accessed on June 16, 2023.

WSA. 2023b. https://www.wsask.ca/wells/wsa-goodale-farm-009/, accessed on June 16, 2023.

WSA. 2023c. Water Security Agency of Saskatchewan (WSASK) Online Water Well Database Portal. https://gis.wsask.ca/Html5Viewer/index.html?viewer=WaterWells.WellsViewer/. Accessed on June 9, 2023.

Whitewater Holdings Ltd. (Whitewater Holdings). 2014. Comprehensive Development – Tuscan Ridge Estates.

LIMITATIONS

In conducting the Groundwater Study, Stantec's work was performed consistent with the level of care and skill ordinarily exercised by members of the profession currently practicing in the same locality under similar conditions. Information provided to Stantec was accepted in good faith and was assumed to be accurate. There are no assurances regarding the accuracy and completeness of this information. All information received from the client/third parties and publicly available information in the preparation of this memo has been assumed by Stantec to be correct. Stantec assumes no responsibility for any deficiency or inaccuracy in information received from others.

As with any environmental evaluation, there is a certain degree of dependence on data presented by third parties and the client that are not readily verifiable. Stantec's established scope of work did not allow access to regulators and no intrusive sampling was conducted by Stantec. Stantec shall not be responsible for conditions or consequences arising from relevant facts that were erroneous, concealed, withheld, or not fully disclosed by vendor or its agents at the time our assessment was performed. The information contained herein, and conclusions drawn from them, are based on a review of information and documents assigned by the client and available at the time of assessment. This general information should not be used for other studies; rather, exact information relating to non-environmental issues should be gathered from other sources. This memo documents work that was performed in accordance with generally accepted professional standards at the time and location in which the services were provided. No other representations, warranties or guarantees are made concerning the accuracy or completeness of the data or conclusions contained within this report, including no assurance that this work has uncovered all potential liabilities associated with the identified property.

Because professional judgments incorporated into the memo are based on limited information there is inherent uncertainty in the conclusions drawn and reported. The client has determined the level of effort and corresponding degree of uncertainty is acceptable for the client's purpose.

This memo has been prepared for the exclusive use of the client identified herein and any use by any third party is prohibited. Stantec assumes no responsibility for losses, damages, liabilities or claims, howsoever arising, from third party use of this memo. Any third party may necessarily have different interests, purposes, and motives than our client with regards to this memo. Therefore, use of this memo by any third party is expressly prohibited without the written authorization of the client and Stantec, including the third party's agreement to accept Stantec's terms and conditions respecting indemnification and limitation of liability.

Stantec did not conduct intrusive investigations at the Site; therefore, the conclusions are based on the site conditions reported by other third parties at the time the work was performed at the specific testing and/or sampling locations, and conditions may vary among sampling locations. In addition, analysis has been carried out for only a limited number of chemical parameters, and it should not be inferred that other chemical species are not present. Due to the nature of the investigation and the limited data available, Stantec does not warrant against undiscovered environmental liabilities nor that the third party sampling results are indicative of the condition of the entire site.

Conclusions made within this memo consist of Stantec's professional opinion as of the time of the writing of this memo and are based solely on the scope of work described in the summary, the limited data available and the results of the work. They are not a certification of the property's environmental condition. This summary should not be construed as legal advice.

This summary has been prepared for the exclusive use of the client identified herein and any use by any third party is prohibited. Stantec assumes no responsibility for losses, damages, liabilities, or claims, howsoever arising, from third party use of this summary.

This memo is limited by the following:

- CDR reports available for review.
- Publicly available information; and
- Information provided by the RM of Corman Park.

Should additional information become available which differs significantly from our understanding of conditions presented in this memo, Stantec specifically disclaims any responsibility to update the conclusions in this memo.

CLOSURE

We trust that the study meets your requirements. Should you have any questions or comments, please feel free to contact us.

Regards,

Stantec Consulting Ltd.

Digitally signed by Xiong, Wenhui
Date: 2023.11.22 11:37:19 -06'00'

Wenhui Xiong Ph.D., P.Eng.
Principal, Environmental Engineer
Phone: 306-667-2459
Wenhui.Xiong@stantec.com

Hughesman, Megan

Digitally signed by Hughesman, Megan
Date: 2023.11.22 07:37:17 -06'00'

Megan Hughesman M.Sc., P.Geol.
Associate / Senior Hydrogeologist
Cell: 431-668-8502
Megan.Hughesman@stantec.com

Attachments: Attachment A – Figures
Attachment B – Tables
Attachment C – Water Well Driller's Reports

APPENDIX A

Figures

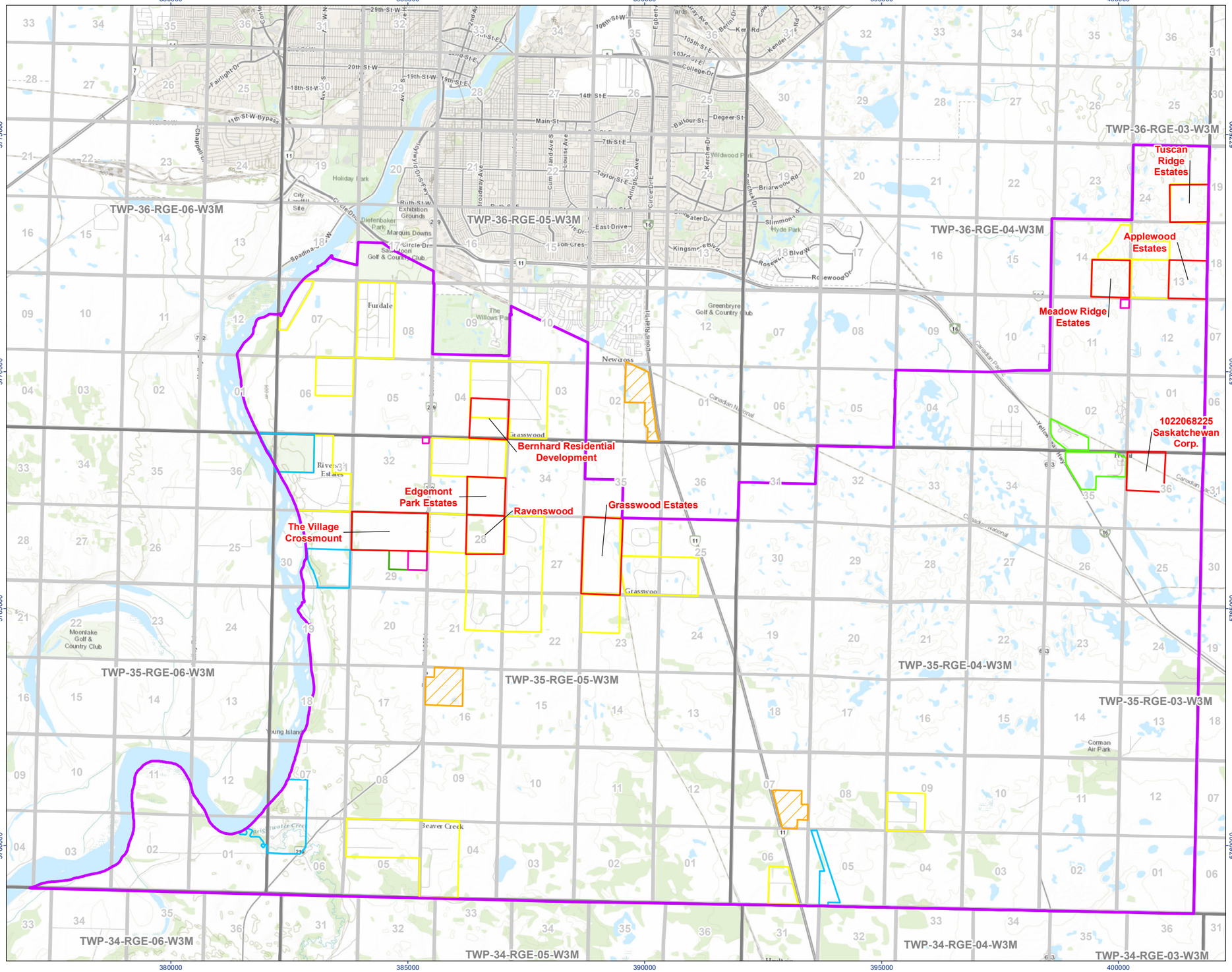

Stantec

Legend

- Study Area
- CDRs*
- Commercial
- Crossmount
- Industrial
- First Nations Land Holding
- Multi Parcel Subdivisions
- Recreation
- Township/Range
- Section

N

0 1 2 Kilometers

(At original document size of 11x17)
1:83,000

Notes

1. Coordinate System: NAD 1983 UTM Zone 13N

2. Data Sources: Base features produced under license with the Government of Saskatchewan and the Government of Canada.

3. Background Orthoimagery: Sources: Esri, HERE, Garmin, Intermap, increment P Corp., GEBCO, USGS, FAO, NPS, NRCAN, GeoBase, IGN, Kadaster NL, Ordnance Survey, Esri Japan, METI, Esri China (Hong Kong), (c) OpenStreetMap contributors, and the GIS User Community,

4. *: CDRs available for Stantec's review.

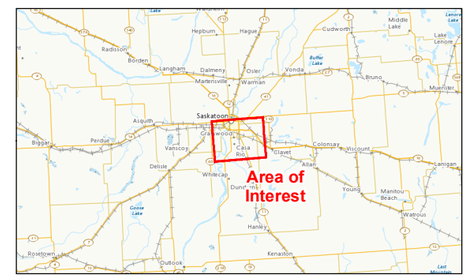

Project Location
RM of Corman Park,
Saskatchewan

Prepared by MH on 2023-07-10
TR by WX on 2023-07-10
IR Review by MH on 2023-07-10

Client/Project
RM of Corman Park
South RM Area Development Plan

111000545-001 REVC

Figure No.
A1

Title
Site Plan

G:_GIS_Project_Folder\00_FromSask\111000545_RMCormanPark\figures\111000545-001_REVC_Siteplan.mxd Revised: 2023-07-10 By: mathughes

Disclaimer: This document has been prepared based on information provided by others as cited in the Notes section. Stantec has not verified the accuracy and/or completeness of this information and shall not be responsible for any errors or omissions which may be incorporated herein as a result. Stantec assumes no responsibility for data supplied in electronic format, and the recipient accepts full responsibility for verifying the accuracy and completeness of the data.

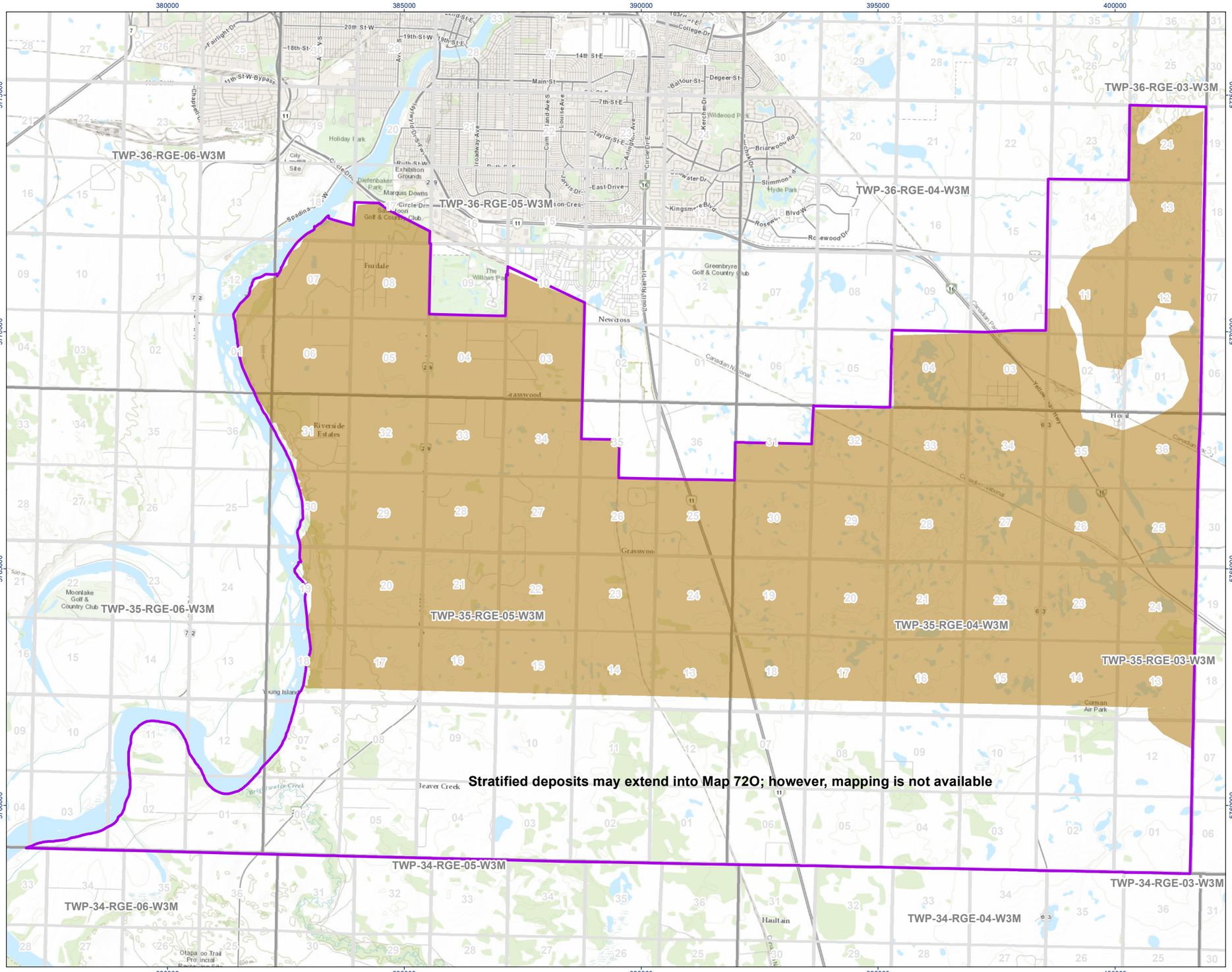

Stantec

Legend

- Study Area
- Interpreted Areal Limits of the Surficial Stratified Deposits
- Township/Range
- Section

N

0 1 2 Kilometers
(At original document size of 11x17)
1:83,000

Notes

1. Coordinate System: NAD 1983 UTM Zone 13N
2. Data Sources: Base features produced under license with the Government of Saskatchewan, the Government of Canada, and Water Security Agency (WSA). 2023a. https://www.wsask.ca/mapsheet/saskatoon-mapsheet-73b/, accessed on June 16, 2023.
3. Background Orthoimagery: Sources: Esri, HERE, Garmin, Intermap, increment P Corp.,

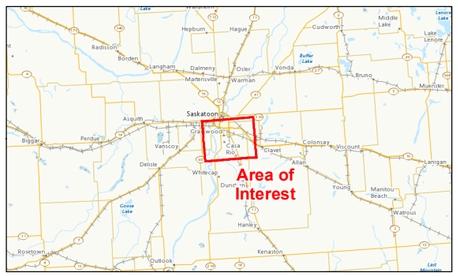

Project Location
RM of Corman Park,
Saskatchewan

Prepared by MH on 2023-07-14
TR by WX on 2023-07-14
IR Review by MH on 2023-07-14

Client/Project
RM of Corman Park
South RM Area Development Plan

111000545-002 REVB

Figure No.
A2

Title
Extents of the Surficial Stratified Deposits Beneath The Development Area

G:_GIS_Project_Folder\00_FromSask\111000545_RMCormanPark\figures\111000545-002_REVB_Surficial.mxd Revised: 2023-07-14 By: mathughes

Disclaimer: This document has been prepared based on information provided by others as cited in the Notes section. Stantec has not verified the accuracy and/or completeness of this information and shall not be responsible for any errors or omissions which may be incorporated herein as a result. Stantec assumes no responsibility for data supplied in electronic format, and the recipient accepts full responsibility for verifying the accuracy and completeness of the data.

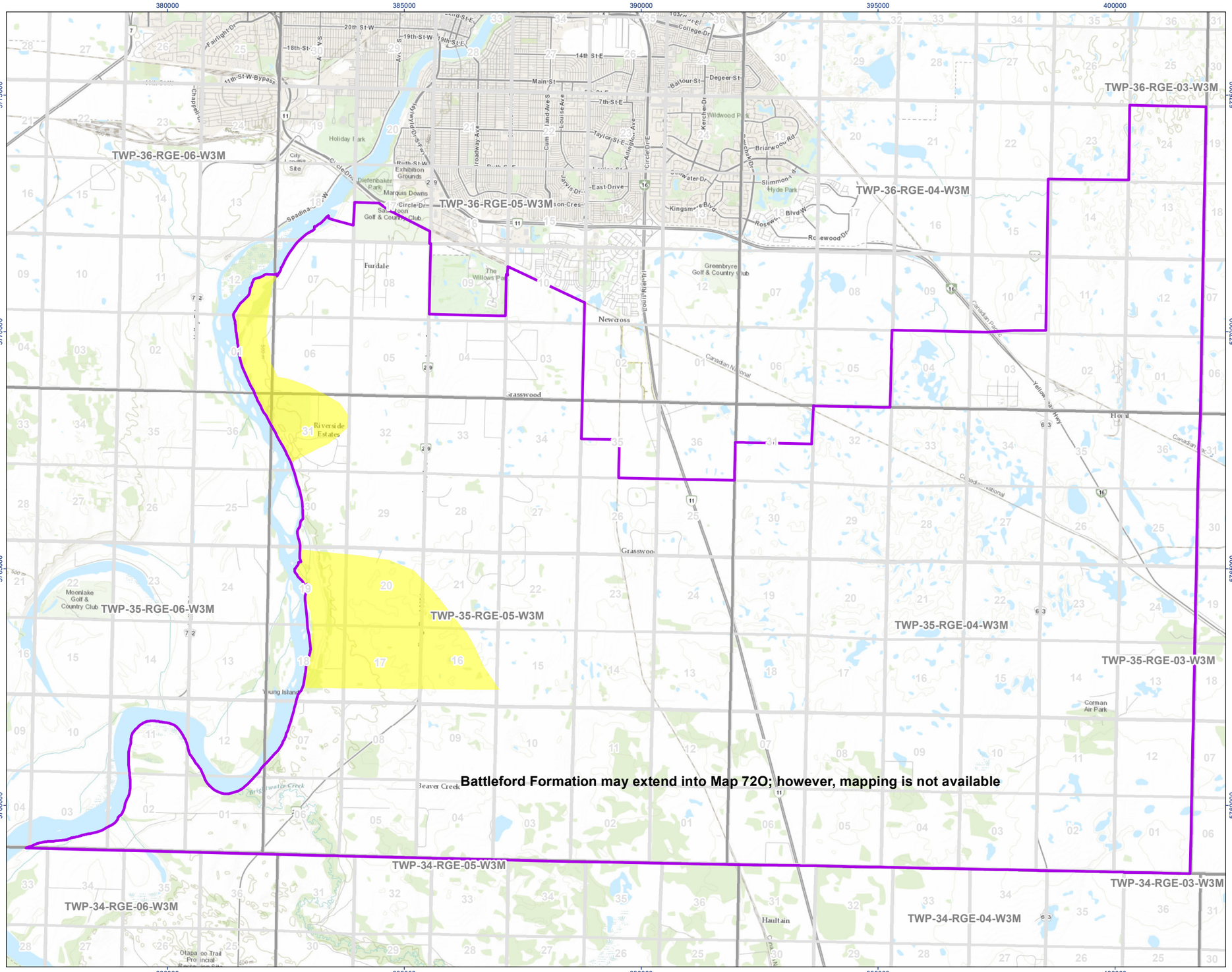

Stantec

Legend

- Study Area
- Interpreted Areal Limits of the Battleford Formation
- Township/Range
- Section

N

0 1 2 Kilometers
(At original document size of 11x17)
1:83,000

Notes

1. Coordinate System: NAD 1983 UTM Zone 13N
2. Data Sources: Base features produced under license with the Government of Saskatchewan, the Government of Canada, and Water Security Agency (WSA). 2023a. https://www.wsask.ca/mapsheet/saskatoon-mapsheet-73b/, accessed on June 16, 2023.
3. Background Orthoimagery: Sources: Esri, HERE, Garmin, Intermap, increment P Corp.,

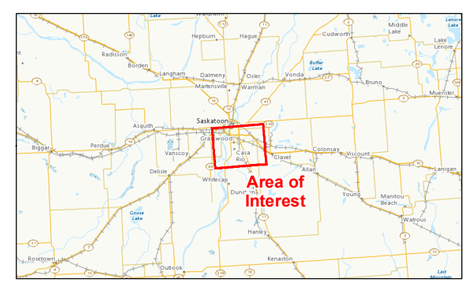

Project Location
RM of Corman Park,
Saskatchewan

Prepared by MH on 2023-07-14
TR by WX on 2023-07-14
IR Review by MH on 2023-07-14

Client/Project
111000545-003 REVB
RM of Corman Park
South RM Area Development Plan

Figure No.
A3

Title
Extents of the Battleford Formation Beneath The Development Area

G:_GIS_Project_Folder\00_FromSask\111000545_RMCormanPark\figures\111000545-003_REVB_Battleford.mxd Revised: 2023-07-14 By: mathughes

Disclaimer: This document has been prepared based on information provided by others as cited in the Notes section. Stantec has not verified the accuracy and/or completeness of this information and shall not be responsible for any errors or omissions which may be incorporated herein as a result. Stantec assumes no responsibility for data supplied in electronic format, and the recipient accepts full responsibility for verifying the accuracy and completeness of the data.

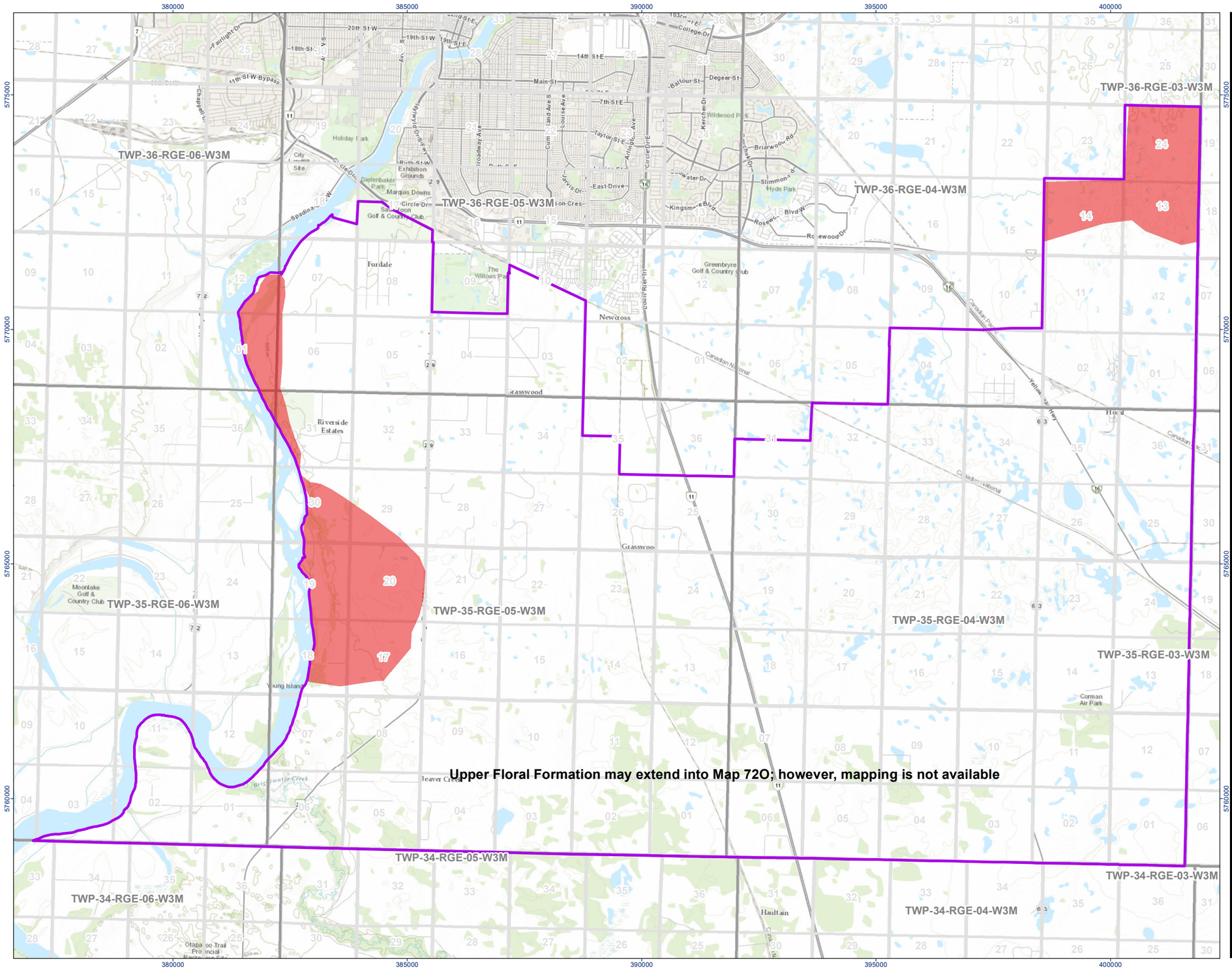

Stantec

Legend

- Study Area
- Interpreted Areal Limits of the Upper Floral Formation
- Township/Range
- Section

N

0 1 2 Kilometers

(At original document size of 11x17) 1:83,000

Notes

1. Coordinate System: NAD 1983 UTM Zone 13N

2. Data Sources: Base features produced under license with the Government of Saskatchewan, the Government of Canada, and Water Security Agency (WSA). 2023a. https://www.wsask.ca/mapsheet/saskatoon-mapsheet-73b/, accessed on June 16, 2023.

3. Background Orthoimagery: Sources: Esri, HERE, Garmin, Intermap, increment P Corp.,

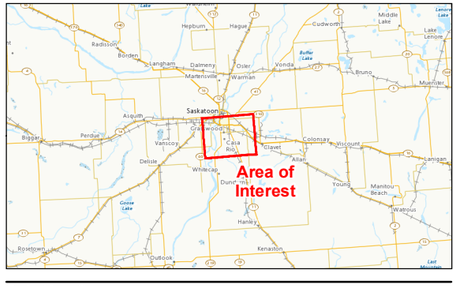

Project Location
RM of Corman Park,
Saskatchewan

Prepared by MH on 2023-07-14
TR by WX on 2023-07-14
IR Review by MH on 2023-07-14

Client/Project
111000545-004 REVB
RM of Corman Park
South RM Area Development Plan

Figure No.
A4

Title
Extents of the Upper Floral Formation Beneath The Development Area

G:_GIS_Project_Folder\00_FromSask\111000545_RMCormanPark\figures\111000545-004_REVB_UpperFloral.mxd Revised: 2023-07-14 By: mathughes

Disclaimer: This document has been prepared based on information provided by others as cited in the Notes section. Stantec has not verified the accuracy and/or completeness of this information and shall not be responsible for any errors or omissions which may be incorporated herein as a result. Stantec assumes no responsibility for data supplied in electronic format, and the recipient accepts full responsibility for verifying the accuracy and completeness of the data.

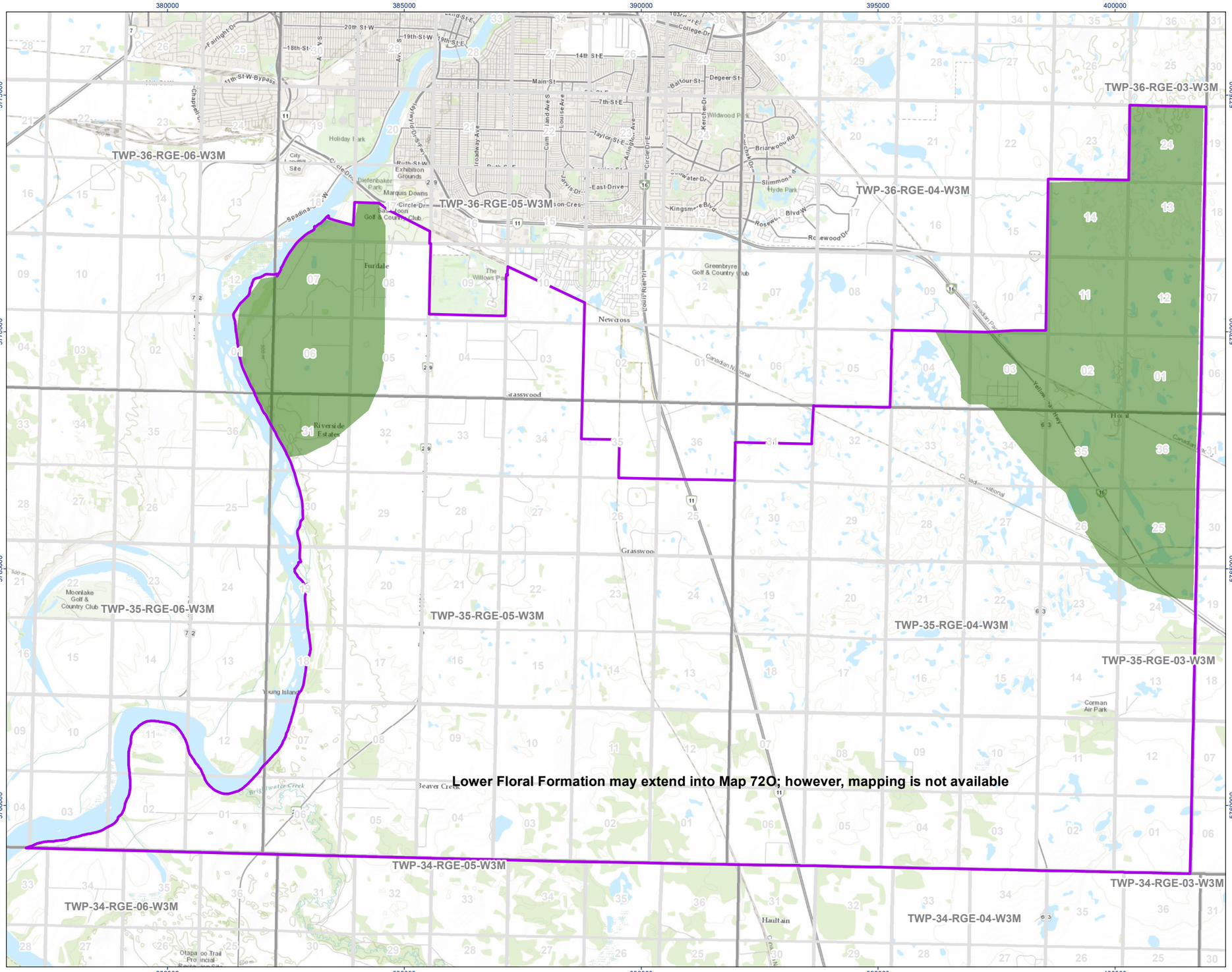

Stantec

Legend

- Study Area
- Interpreted Areal Limits of the Lower Floral Formation
- Township/Range
- Section

N

0 1 2 Kilometers
(At original document size of 11x17)
1:83,000

Notes

1. Coordinate System: NAD 1983 UTM Zone 13N
2. Data Sources: Base features produced under license with the Government of Saskatchewan, the Government of Canada, and Water Security Agency (WSA). 2023a. https://www.wsask.ca/mapsheet/saskatoon-mapsheet-73b/, accessed on June 16, 2023.
3. Background Orthoimagery: Sources: Esri, HERE, Garmin, Intermap, increment P Corp.,

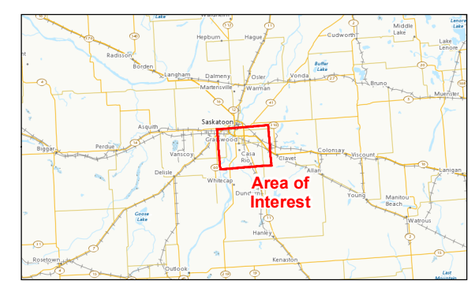

Project Location
RM of Corman Park,
Saskatchewan

Prepared by MH on 2023-07-14
TR by WX on 2023-07-14
IR Review by MH on 2023-07-14

Client/Project
RM of Corman Park
South RM Area Development Plan

111000545-005 REVB

Figure No.
A5

Title
Extents of the Lower Floral Formation Beneath The Development Area

G:_GIS_Project_Folder\00_FromSask\111000545_RMCormanPark\figures\111000545-005_REVB_LowerFloral.mxd Revised: 2023-07-14 By: mathughes

Disclaimer: This document has been prepared based on information provided by others as cited in the Notes section. Stantec has not verified the accuracy and/or completeness of this information and shall not be responsible for any errors or omissions which may be incorporated herein as a result. Stantec assumes no responsibility for data supplied in electronic format, and the recipient accepts full responsibility for verifying the accuracy and completeness of the data.

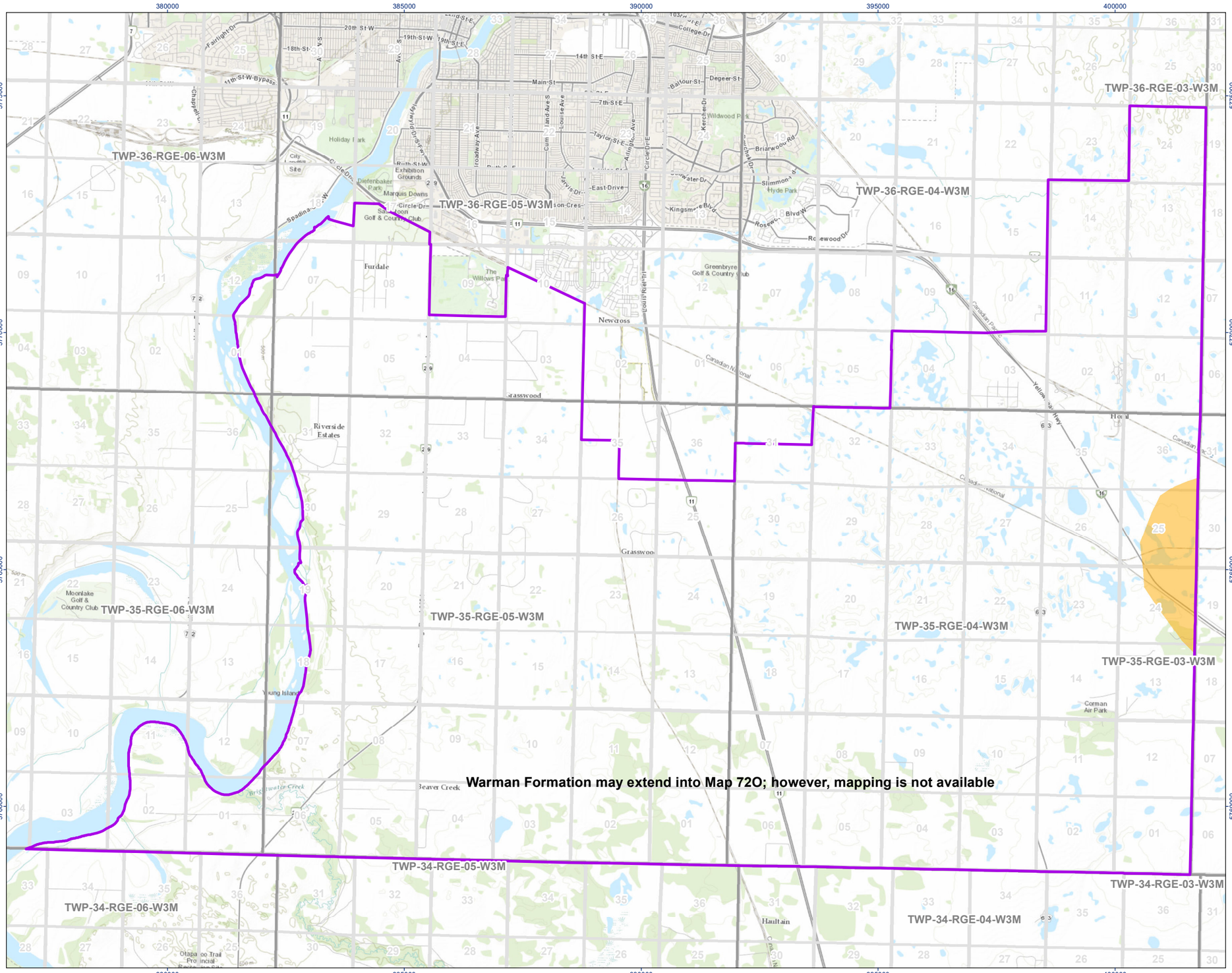

Stantec

Legend

- Study Area
- Interpreted Areal Limits of the Warman Formation
- Township/Range
- Section

N

0 1 2 Kilometers
(At original document size of 11x17)
1:83,000

Notes

1. Coordinate System: NAD 1983 UTM Zone 13N
2. Data Sources: Base features produced under license with the Government of Saskatchewan, the Government of Canada, and Water Security Agency (WSA). 2023a. https://www.wsask.ca/mapsheet/saskatoon-mapsheet-73b/, accessed on June 16, 2023.
3. Background Orthoimagery: Sources: Esri, HERE, Garmin, Intermap, increment P Corp.,

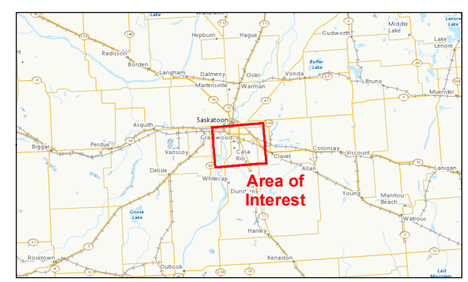

Project Location
RM of Corman Park,
Saskatchewan

Prepared by MH on 2023-07-14
TR by WX on 2023-07-14
IR Review by MH on 2023-07-14

Client/Project
111000545-006 REVB
RM of Corman Park
South RM Area Development Plan

Figure No.
A6

Title
Extents of the Warman Formation Beneath The Development Area

G:_GIS_Project_Folder\00_FromSask\111000545_RMCormanPark\figures\111000545-006_REVB_Warman.mxd Revised: 2023-07-14 By: mathughes

Disclaimer: This document has been prepared based on information provided by others as cited in the Notes section. Stantec has not verified the accuracy and/or completeness of this information and shall not be responsible for any errors or omissions which may be incorporated herein as a result. Stantec assumes no responsibility for data supplied in electronic format, and the recipient accepts full responsibility for verifying the accuracy and completeness of the data.

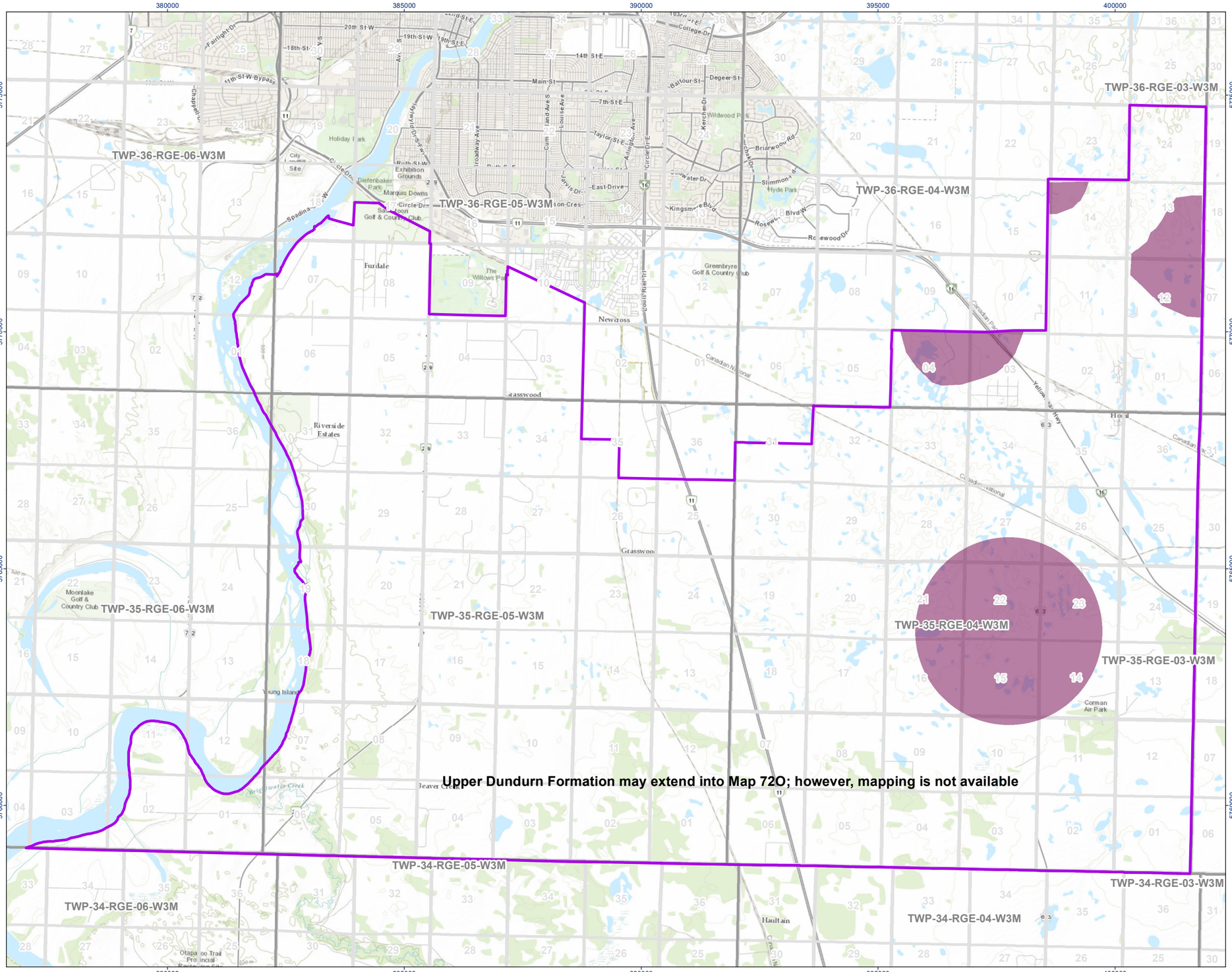

Stantec

Legend

- Study Area
- Interpreted Areal Limits of the Upper Dundurn Formation
- Township/Range
- Section

N

0 1 2 Kilometers
(At original document size of 11x17)
1:83,000

Notes

1. Coordinate System: NAD 1983 UTM Zone 13N
2. Data Sources: Base features produced under license with the Government of Saskatchewan, the Government of Canada, and Water Security Agency (WSA). 2023a. https://www.wsask.ca/mapsheet/saskatoon-mapsheet-73b/, accessed on June 16, 2023.
3. Background Orthoimagery: Sources: Esri, HERE, Garmin, Intermap, increment P Corp.,

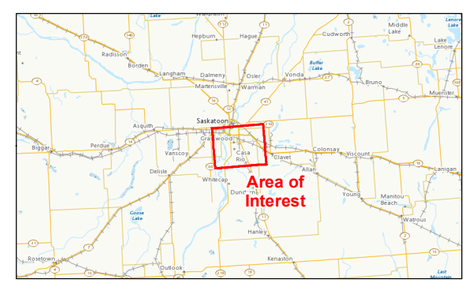

Project Location
RM of Corman Park,
Saskatchewan

Prepared by MH on 2023-07-14
TR by WX on 2023-07-14
IR Review by MH on 2023-07-14

Client/Project
111000545-007 REVB
RM of Corman Park
South RM Area Development Plan

Figure No.
A7

Title
Extents of the Upper Dundurn Formation Beneath The Development Area

G:_GIS_Project_Folder\00_FromSask\111000545_RMCormanPark\figures\111000545-007_REVB_UpperDundurn.mxd Revised: 2023-07-14 By: mathughes

Disclaimer: This document has been prepared based on information provided by others as cited in the Notes section. Stantec has not verified the accuracy and/or completeness of this information and shall not be responsible for any errors or omissions which may be incorporated herein as a result. Stantec assumes no responsibility for data supplied in electronic format, and the recipient accepts full responsibility for verifying the accuracy and completeness of the data.

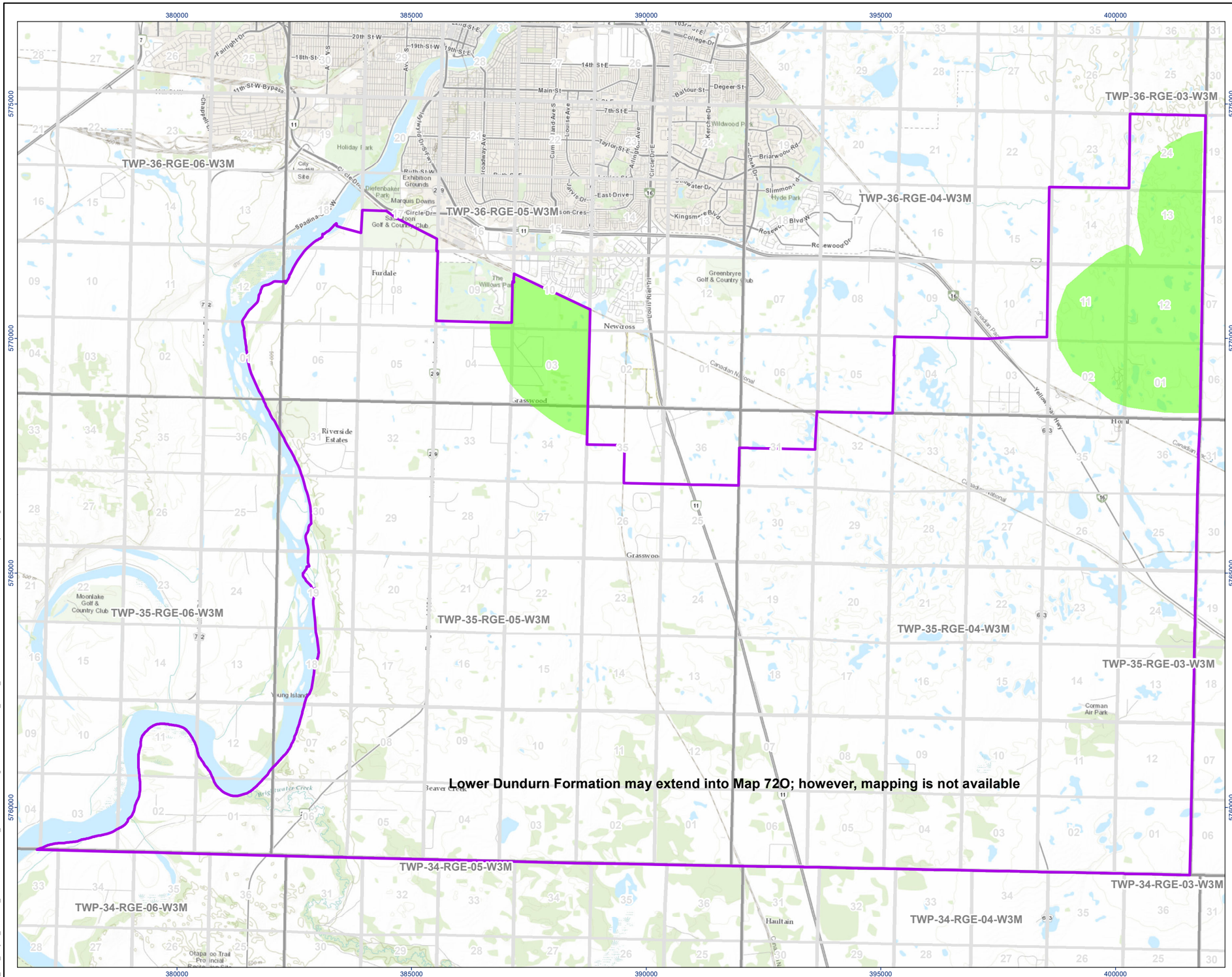

Stantec

Legend

- Study Area
- Interpreted Areal Limits of the Lower Dundurn Formation
- Township/Range
- Section

N

0 1 2 Kilometers
(At original document size of 11x17)
1:83,000

Notes

1. Coordinate System: NAD 1983 UTM Zone 13N
2. Data Sources: Base features produced under license with the Government of Saskatchewan, the Government of Canada, and Water Security Agency (WSA). 2023a. https://www.wsask.ca/mapsheet/saskatoon-mapsheet-73b/, accessed on June 16, 2023.
3. Background Orthoimagery: Sources: Esri, HERE, Garmin, Intermap, increment P Corp.,

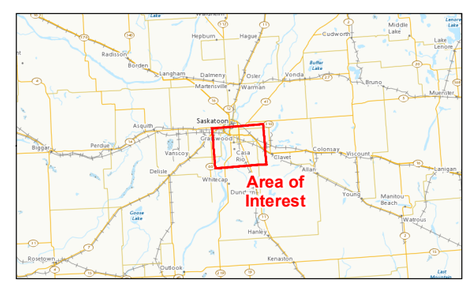

Project Location
RM of Corman Park,
Saskatchewan

Prepared by MH on 2023-07-14
TR by WX on 2023-07-14
IR Review by MH on 2023-07-14

Client/Project
RM of Corman Park
South RM Area Development Plan

111000545-008 REVB

Figure No.
A8

Title
Extents of the Lower Dundurn Formation Beneath The Development Area

G:_GIS_Project_Folder\00_FromSask\111000545_RMCormanPark\figures\111000545-008_REVB_LowerDundurn.mxd Revised: 2023-07-14 By: mathughes

Disclaimer: This document has been prepared based on information provided by others as cited in the Notes section. Stantec has not verified the accuracy and/or completeness of this information and shall not be responsible for any errors or omissions which may be incorporated herein as a result. Stantec assumes no responsibility for data supplied in electronic format, and the recipient accepts full responsibility for verifying the accuracy and completeness of the data.

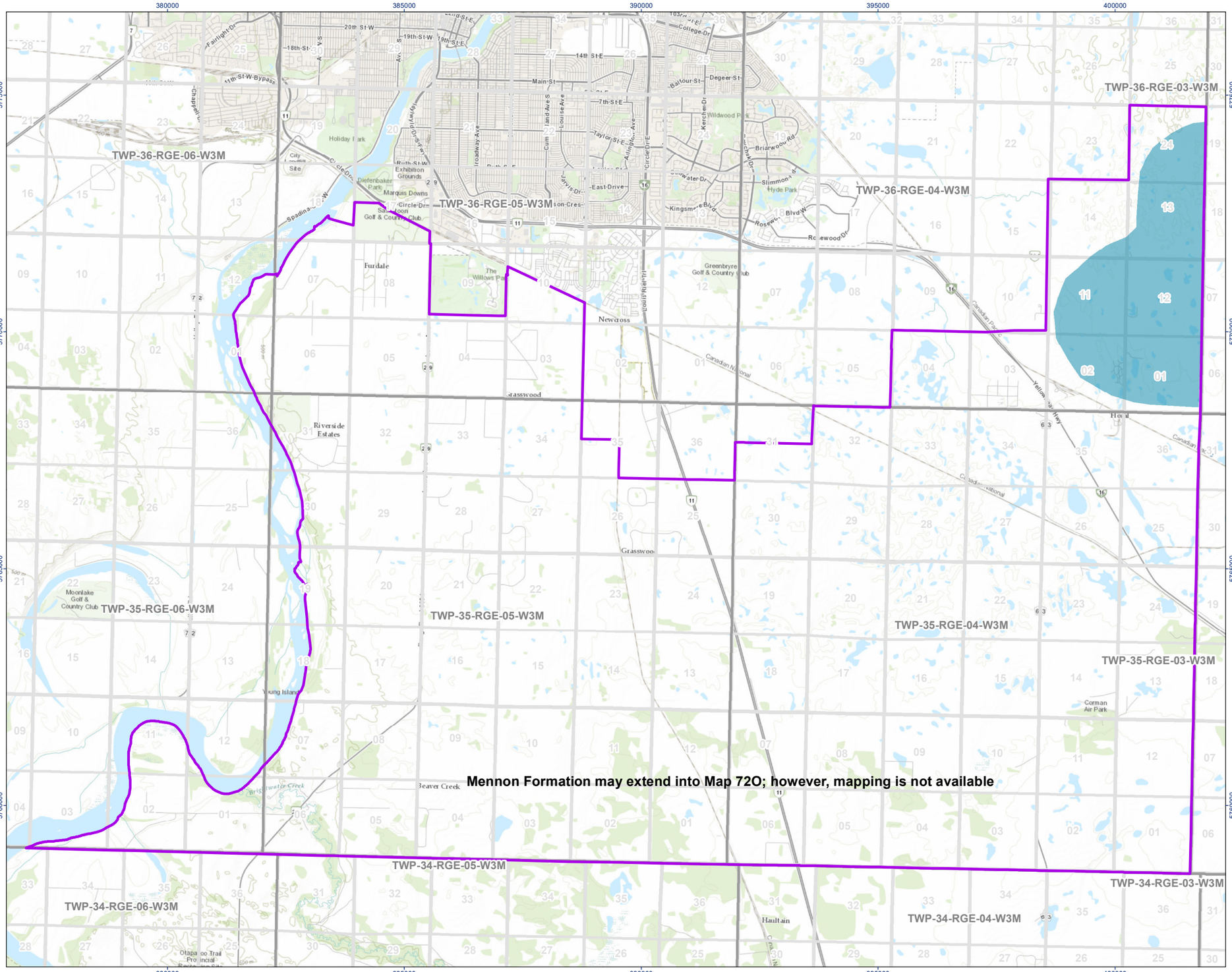

Stantec

Legend

- Study Area
- Interpreted Areal Limits of the Mennon Formation
- Township/Range
- Section

N

0 1 2 Kilometers
(At original document size of 11x17)
1:83,000

Notes

1. Coordinate System: NAD 1983 UTM Zone 13N
2. Data Sources: Base features produced under license with the Government of Saskatchewan, the Government of Canada, and Water Security Agency (WSA). 2023a. https://www.wsask.ca/mapsheet/saskatoon-mapsheet-73b/, accessed on June 16, 2023.
3. Background Orthoimagery: Sources: Esri, HERE, Garmin, Intermap, increment P Corp.,

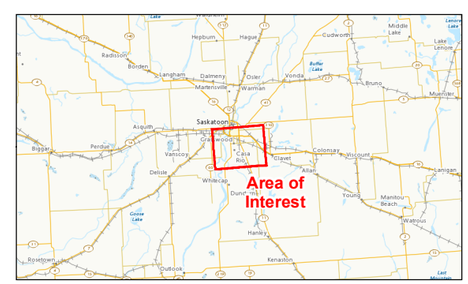

Project Location
RM of Corman Park,
Saskatchewan

Prepared by MH on 2023-07-14
TR by WX on 2023-07-14
IR Review by MH on 2023-07-14

Client/Project
RM of Corman Park
South RM Area Development Plan

111000545-009 REVB

Figure No.
A9

Title
Extents of the Mennon Formation Beneath The Development Area

G:_GIS_Project_Folder\00_FromSask\111000545_RMCormanPark\figures\111000545-009_REVB_Mennon.mxd Revised: 2023-07-14 By: mathughes

Disclaimer: This document has been prepared based on information provided by others as cited in the Notes section. Stantec has not verified the accuracy and/or completeness of this information and shall not be responsible for any errors or omissions which may be incorporated herein as a result. Stantec assumes no responsibility for data supplied in electronic format, and the recipient accepts full responsibility for verifying the accuracy and completeness of the data.

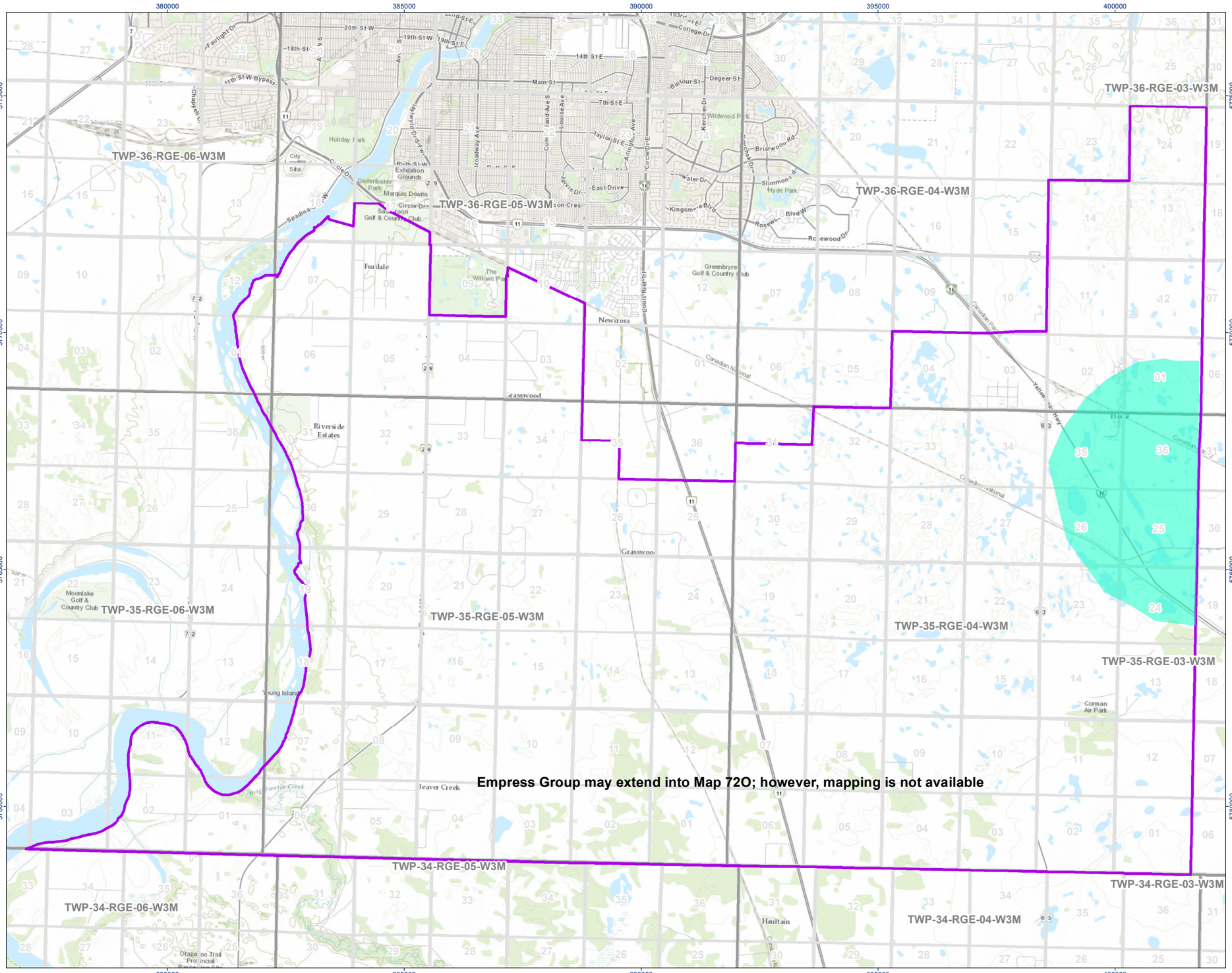

Stantec

Legend

- Study Area
- Interpreted Areal Limits of the Empress Group
- Township/Range
- Section

N

0 1 2 Kilometers
(At original document size of 11x17)
1:83,000

Notes

1. Coordinate System: NAD 1983 UTM Zone 13N
2. Data Sources: Base features produced under license with the Government of Saskatchewan, the Government of Canada, and Water Security Agency (WSA). 2023a. https://www.wsask.ca/mapsheet/saskatoon-mapsheet-73b/, accessed on June 16, 2023.
3. Background Orthoimagery: Sources: Esri, HERE, Garmin, Intermap, increment P Corp.,

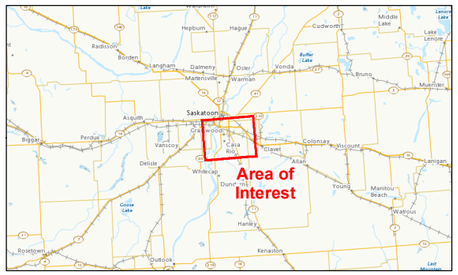

Project Location
RM of Corman Park,
Saskatchewan

Prepared by MH on 2023-07-14
TR by WX on 2023-07-14
IR Review by MH on 2023-07-14

Client/Project
111000545-010 REVB
RM of Corman Park
South RM Area Development Plan

Figure No.
A10

Title
Extents of the Empress Group Beneath The Development Area

G:_GIS_Project_Folder\00_FromSask\111000545_RMCormanPark\figures\111000545-010_REVB_Empress.mxd Revised: 2023-07-14 By: mathughes

Disclaimer: This document has been prepared based on information provided by others as cited in the Notes section. Stantec has not verified the accuracy and/or completeness of this information and shall not be responsible for any errors or omissions which may be incorporated herein as a result. Stantec assumes no responsibility for data supplied in electronic format, and the recipient accepts full responsibility for verifying the accuracy and completeness of the data.

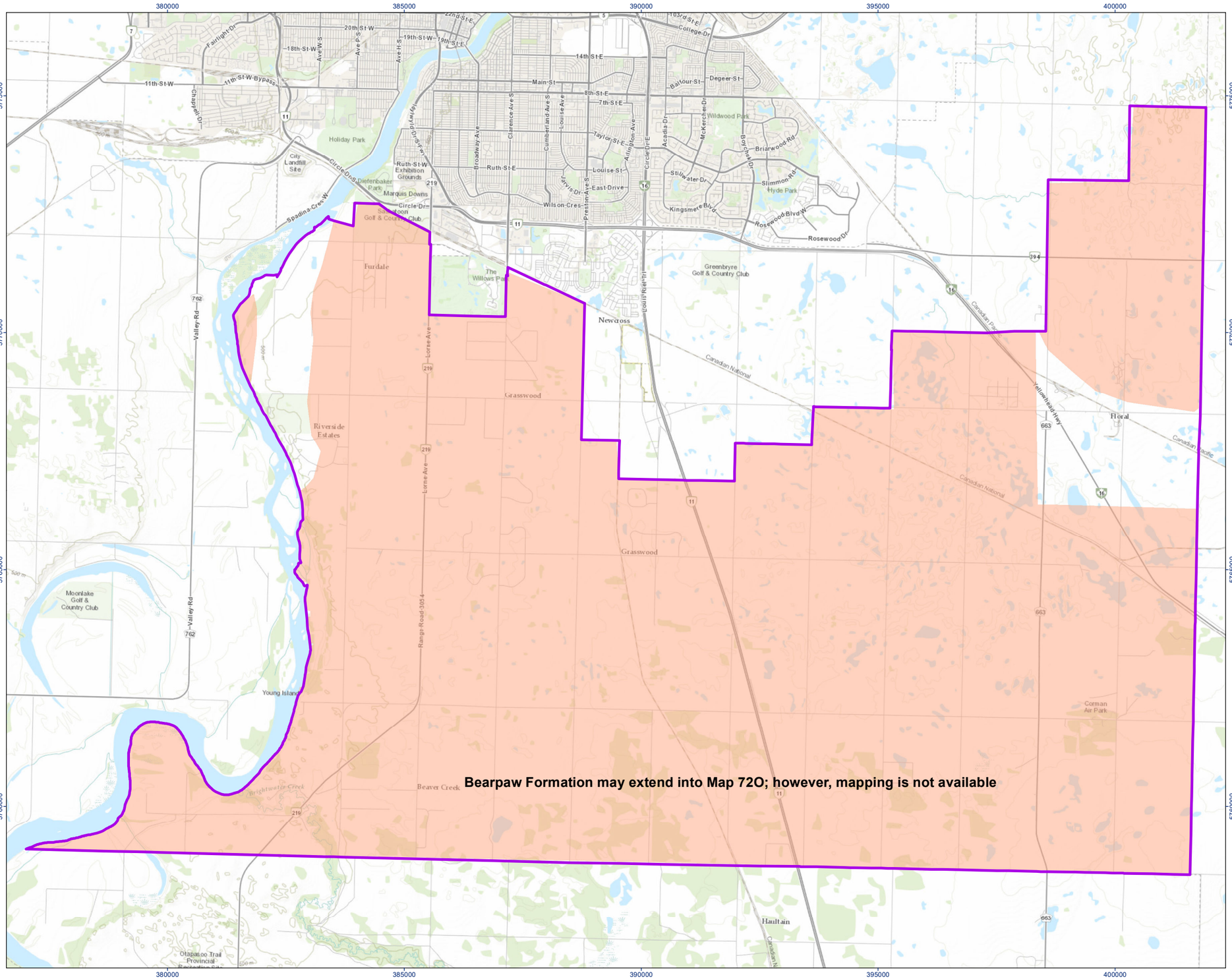

Stantec

Legend

- Study Area
- Interpreted Areal Limits of the Bearpaw Formation
- Township/Range
- Section

N

0 1 2 Kilometers
(At original document size of 11x17)
1:83,000

Notes

1. Coordinate System: NAD 1983 UTM Zone 13N
2. Data Sources: Base features produced under license with the Government of Saskatchewan, the Government of Canada, and Water Security Agency (WSA). 2023a. https://www.wsask.ca/mapsheet/saskatoon-mapsheet-73b/, accessed on June 16, 2023.
3. Background Orthoimagery: Sources: Esri, HERE, Garmin, Intermap, increment P Corp.,

Project Location
RM of Corman Park,
Saskatchewan

Prepared by MH on 2023-07-14
TR by WX on 2023-07-14
IR Review by MH on 2023-07-14

Client/Project
RM of Corman Park
South RM Area Development Plan

111000545-011 REVB

Figure No.
A11

Title
Extents of the Bearpaw Formation Beneath The Development Area

G:_GIS_Project_Folder\00_FromSask\111000545_RMCormanPark\figures\111000545-011_REVB_BearPawFrm.mxd Revised: 2023-07-14 By: mathughes

Disclaimer: This document has been prepared based on information provided by others as cited in the Notes section. Stantec has not verified the accuracy and/or completeness of this information and shall not be responsible for any errors or omissions which may be incorporated herein as a result. Stantec assumes no responsibility for data supplied in electronic format, and the recipient accepts full responsibility for verifying the accuracy and completeness of the data.

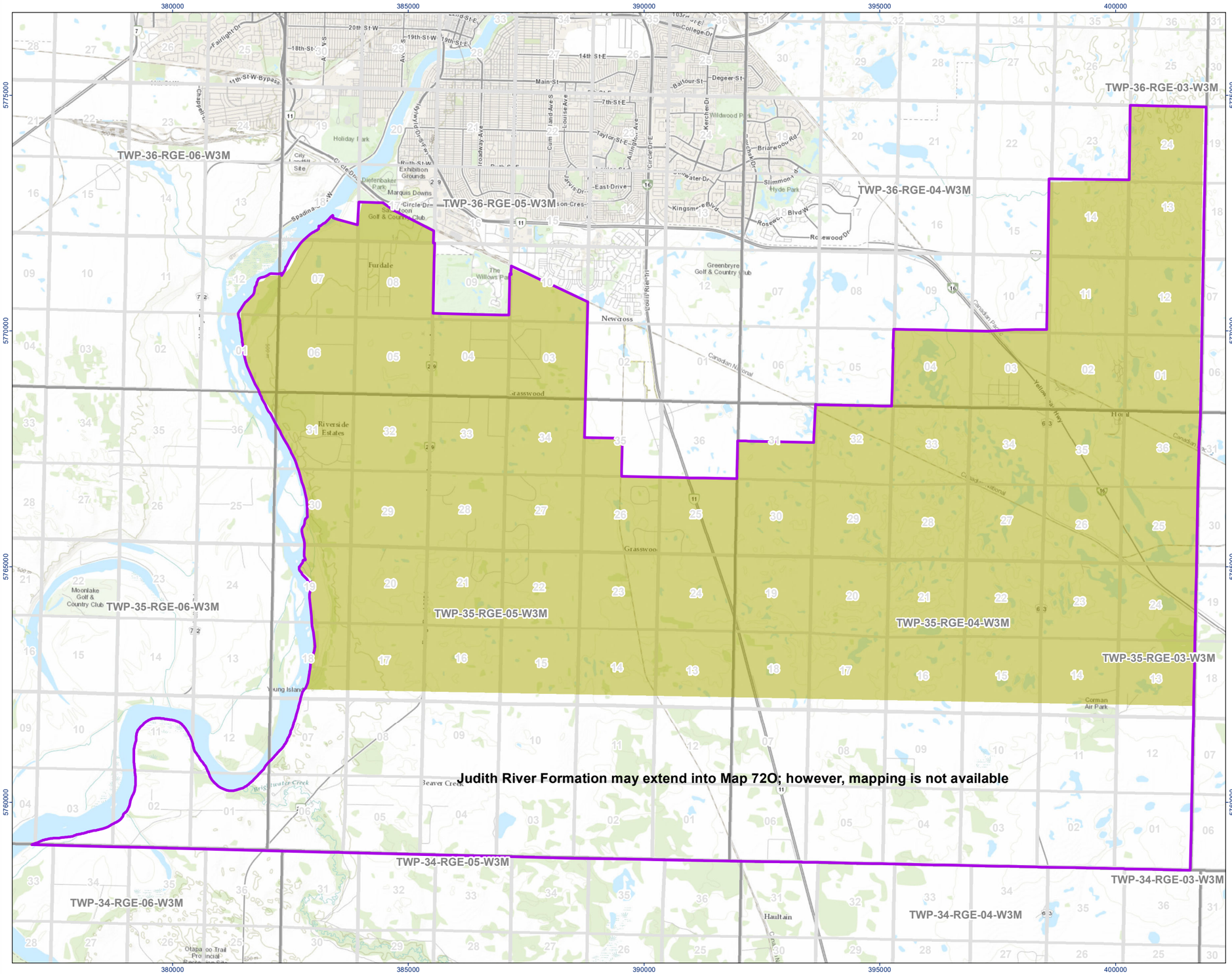

Stantec

Legend

- Study Area
- Interpreted Areal Limits of the Judith River Formation
- Township/Range
- Section

N

0 1 2 Kilometers
(At original document size of 11x17)
1:83,000

Notes

1. Coordinate System: NAD 1983 UTM Zone 13N
2. Data Sources: Base features produced under license with the Government of Saskatchewan, the Government of Canada, and Water Security Agency (WSA). 2023a. https://www.wsask.ca/mapsheet/saskatoon-mapsheet-73b/, accessed on June 16, 2023.
3. Background Orthoimagery: Sources: Esri, HERE, Garmin, Intermap, increment P Corp.,

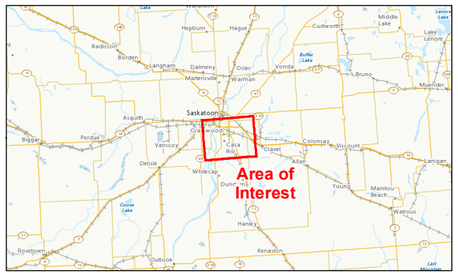

Project Location
RM of Corman Park,
Saskatchewan

Prepared by MH on 2023-07-14
TR by WX on 2023-07-14
IR Review by MH on 2023-07-14

Client/Project
111000545-012 REVB
RM of Corman Park
South RM Area Development Plan

Figure No.
A12

Title
Extents of the Judith River Formation Beneath The Development Area

G:_GIS_Project_Folder\00_FromSask\111000545_RMCormanPark\figures\111000545-012_REVB_Judith.mxd Revised: 2023-07-14 By: mathughes

Disclaimer: This document has been prepared based on information provided by others as cited in the Notes section. Stantec has not verified the accuracy and/or completeness of this information and shall not be responsible for any errors or omissions which may be incorporated herein as a result. Stantec assumes no responsibility for data supplied in electronic format, and the recipient accepts full responsibility for verifying the accuracy and completeness of the data.

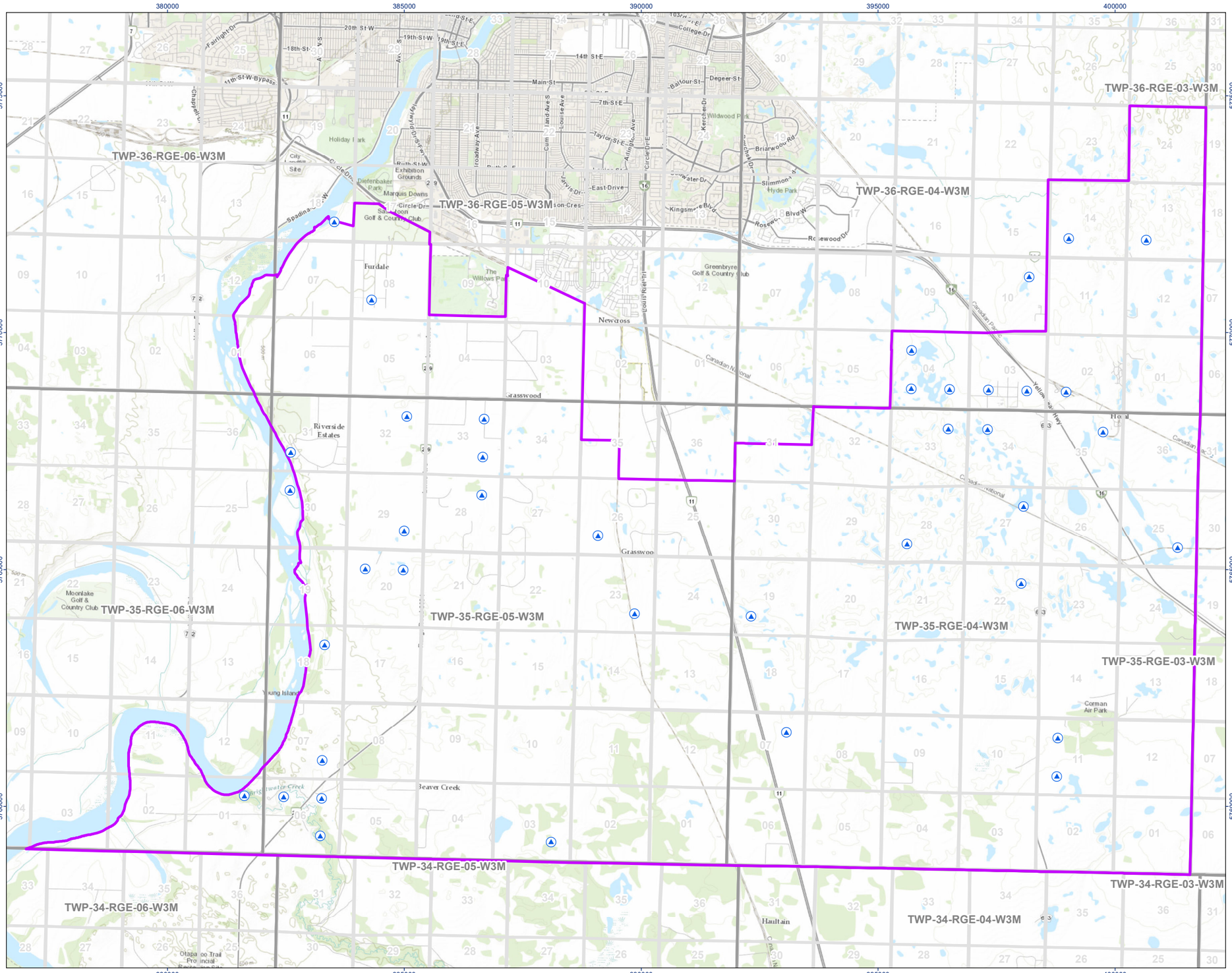

Stantec

Legend

- Non-Domestic Water Wells
- Study Area
- Township/Range
- Section

N

0 1 2 Kilometers
(At original document size of 11x17)
1:83,000

Notes

1. Coordinate System: NAD 1983 UTM Zone 13N
2. Data Sources: Base features produced under license with the Government of Saskatchewan, the Government of Canada, and Water Security Agency (WSA).
3. Background Orthoimagery: Sources: Esri, HERE, Garmin, Intermap, increment P Corp., GEBCO, USGS, FAO, NPS, NRCAN, GeoBase, IGN, Kadaster NL, Ordnance Survey, Esri

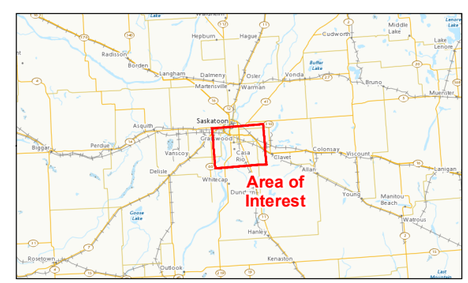

Project Location
RM of Corman Park,
Saskatchewan

Prepared by MH on 2023-06-29
TR by WX on 2023-06-29
IR Review by MH on 2023-06-29

Client/Project
111000545-013 REVB
RM of Corman Park
South RM Area Development Plan

Figure No.
A13

Title
Non-Domestic Water Well Locations

G:_GIS_Project_Folder\00_FromSask\111000545_RMCormanPark\figures\111000545-013_REVB_NonDomesticWells.mxd Revised: 2023-06-29 By: mathughes

Disclaimer: This document has been prepared based on information provided by others as cited in the Notes section. Stantec has not verified the accuracy and/or completeness of this information and shall not be responsible for any errors or omissions which may be incorporated herein as a result. Stantec assumes no responsibility for data supplied in electronic format, and the recipient accepts full responsibility for verifying the accuracy and completeness of the data.

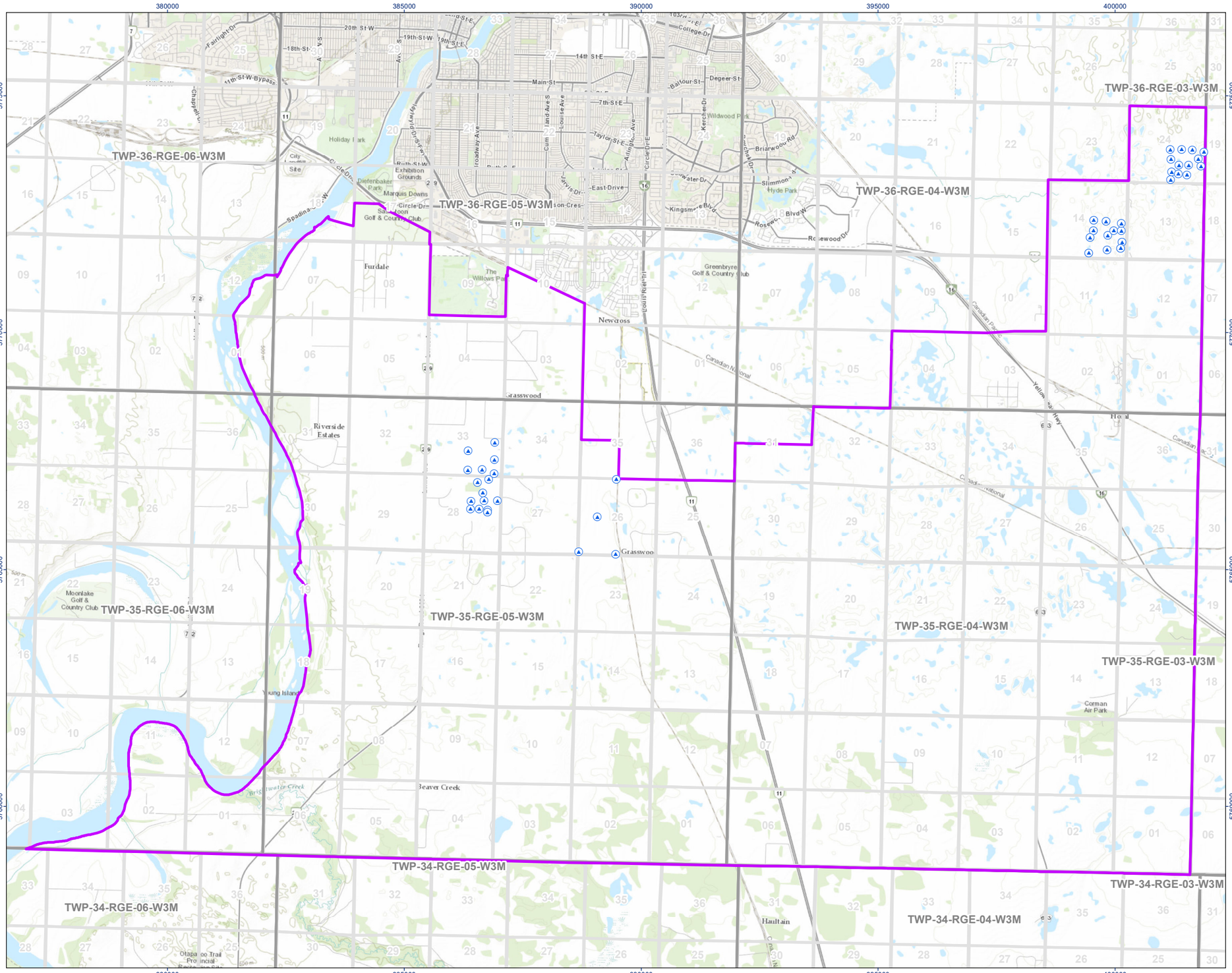

Stantec

Legend

- Study Area
- Groundwater Wells
- Township/Range
- Section

N

0 1 2 Kilometers
(At original document size of 11x17)
1:83,000

Notes

1. Coordinate System: NAD 1983 UTM Zone 13N
2. Data Sources: Base features produced under license with the Government of Saskatchewan, the Government of Canada, and Water Security Agency (WSA).
3. Background Orthoimagery: Sources: Esri, HERE, Garmin, Intermap, increment P Corp., GEBCO, USGS, FAO, NPS, NRCAN, GeoBase, IGN, Kadaster NL, Ordnance Survey, Esri

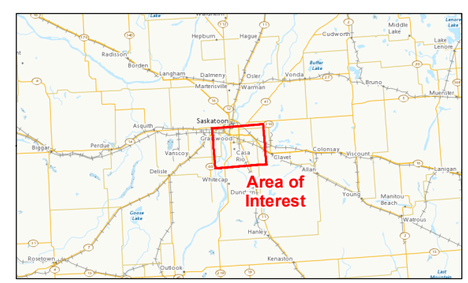

Project Location
RM of Corman Park,
Saskatchewan

Prepared by MH on 2023-06-29
TR by WX on 2023-06-29
IR Review by MH on 2023-06-29

Client/Project
RM of Corman Park
South RM Area Development Plan

111000545-014 REVB

Figure No.
A14

Title
Groundwater Well Locations

G:_GIS_Project_Folder\00_FromSask\111000545_RMCormanPark\figures\111000545-014_REVB_GW_Locations.mxd Revised: 2023-06-29 By: mathughes

Disclaimer: This document has been prepared based on information provided by others as cited in the Notes section. Stantec has not verified the accuracy and/or completeness of this information and shall not be responsible for any errors or omissions which may be incorporated herein as a result. Stantec assumes no responsibility for data supplied in electronic format, and the recipient accepts full responsibility for verifying the accuracy and completeness of the data.

APPENDIX B

Tables

Stantec Consulting Ltd.
Groundwater Study
1110005444 - R.M. of Corman Park
Table B1 - Non-Domestic Pumping wells Within the Study Area

WWDR	LLD	Well Owner	Driller	Completion Date	Borehole Depth (mBGL)	Water Use	Well Use	Screen Top (mBGL)	Screen Bottom (mBGL)	Aquifer
210584	05-SW-03-36-04-3	Saskatchewan Research Council	Don Macrae Augering	1976.05.31	34.1	Research	Observation	16.2	17.4	Unknown
31779	SW-13-36-04-3	Saskatchewan Research Council	Elk Point Drilling Corp.		34.1	Research	Water Test Hole			
241215	NE-20-35-05-3	102047560 Saskatchewan Ltd.	Mitchell Drilling Water Wells Ltd.	2019.10.11	0.0		Water Test Hole			
45655	NE-27-35-04-3	Saskatchewan Research Council	Don Macrae Augering	1976.03.23	10.7	Research	Water Test Hole			
116862	5-SW-03-36-04-3	Saskatchewan Ministry of Highways and In	Unknown Client 031	1987.07.28	36.0	Research	Soil Test Hole			
241030	SW-31-35-05-3	Khan	Wellen Boring Ltd.	2020.05.28	12.2		Water Test Hole			
239770	NE-33-35-05-3	Lucyshyn	Wellen Boring Ltd.	2018.06.26	12.2		Water Test Hole			
116890	5-SW-03-36-04-3	Saskatchewan Ministry of Highways and In	Unknown Client 031	1989.07.27	121.0	Research	Soil Test Hole			
43766	NE-33-35-04-3	Goodale Farm	Don Macrae Augering	1974.11.20	9.1	Research	Observation	5.5	6.7	Surficial Aquifer
241698	NE-06-35-05-3	Meewasin Valley Authority	Wellen Boring Ltd.	2019.08.20	16.5	Recreation	Withdrawal	7.9	16.5	Surficial Aquifer
116929	16-NE-32-35-05-3	Saskatchewan Ministry of Highways and In	Unknown Client 031	1995.07.27	137.2	Research	Soil Test Hole			
220030	SW-08-36-05-3	Saskatchewan Research Council	Unknown Client 031	1967.10.31	22.9	Research	Soil Test Hole			
116917	4-SW-19-35-04-3	Saskatchewan Ministry of Highways and In	Unknown Client 031	1991.07.03	146.0	Research	Soil Test Hole			
241195	NW-20-35-05-3	Green Prairie Environmental	Mitchell Drilling Water Wells Ltd.	2019.05.02	29.3		Water Test Hole			
211198	8-SE-04-36-04-3	Goodale Farm	Elk Point Drilling Corp.	1984.01.01	38.1	Research	Observation		37.8	Upper Dundurn Aquifer
43763	SE-03-36-04-3	Xplore It Drilling Ltd.	Hayter Drilling Ltd.	1975.07.17	88.4	Research	Water Test Hole			
239802	SE-23-35-05-3	Gillespie Developments	Wellen Boring Ltd.	2018.05.16	9.1		Water Test Hole			
219553	4-SW-19-35-04-3	Unknown Client 031	Unknown Client 031		146.0					
234048	SE-29-35-05-3	Kenmore Land Co.	Wellen Boring Ltd.	2014.07.24	18.3		Water Test Hole			
219310	NE-22-35-04-3	Saskatchewan Research Council	Unknown Client 031	1968.10.13	21.3	Research	Soil Test Hole			
210622	8-SE-18-36-05-3	University of Saskatchewan	Hayter Drilling Ltd.	1974.01.01	121.9	Research	Water Test Hole			
220186	NE-33-35-04-3	Saskatchewan Research Council	Unknown Client 031	1976.12.31	15.2	Research	Soil Test Hole			
9561	16-NE-01-35-06-3	Moon Lake Gardens	Hayter Drilling Ltd.	1973.10.18	123.4	Irrigation	Water Test Hole			
225555	SE-33-35-05-3	ISL Engineering and Land Services Ltd.	Mobile Augers & Research Ltd.	2017.02.10	5.2	Research	Water Test Hole	2.1	5.2	Surficial Aquifer
31757	SW-19-35-04-3	Saskatchewan Research Council	Elk Point Drilling Corp.	1966.09.01	141.4	Research	Water Test Hole			
116918	1-SE-03-35-05-3	Saskatchewan Ministry of Highways and In	Unknown Client 031	1991.07.09	182.0	Research	Soil Test Hole			
241196	NW-20-35-05-3	Green Prairie Environmental	Mitchell Drilling Water Wells Ltd.	2019.05.03	29.3	Industrial	Withdrawal	7.6	12.2	Surficial Aquifer
46738	SW-03-36-04-3	Saskatchewan Research Council	Don Macrae Augering	1976.05.31	32.6	Research	Observation	18.3	19.8	Lower Floral Aquifer
31784	SW-13-36-04-3	Saskatchewan Research Council	Elk Point Drilling Corp.		34.4	Research	Water Test Hole			
241031	SW-31-35-05-3	Khan	Wellen Boring Ltd.	2020.05.28	18.3		Water Test Hole			
231718	15-NE-06-35-05-3	Saskatchewan Research Council	Saskatchewan Ministry of Highways and In	1989.06.27	109.7					
241029	SW-31-35-05-3	Khan	Wellen Boring Ltd.	2020.05.28	15.2		Water Test Hole			
234049	SE-29-35-05-3	Kenmore Land Co.	Wellen Boring Ltd.	2014.07.24	15.2		Water Test Hole			
220259	1-SE-07-35-05-3	Unknown Client 031	Unknown Client 031		938.2					
43761	NE-33-35-04-3	Goodale Farm	Don Macrae Augering	1974.11.20	7.9	Research	Observation	4.6	5.8	Surficial Aquifer
31768	NE-35-35-04-3	Canada Cement	International Water Supply Ltd.		112.8	Industrial	Water Test Hole			
45301	NW-11-35-04-3	Saskatchewan Research Council	Hayter Drilling Ltd.	1976.03.14	79.2	Research	Water Test Hole			
241009	NE-07-35-04-3	Vanderpost	Wellen Boring Ltd.	2018.10.22	15.5	Research	Withdrawal	4.9	15.5	Surficial Aquifer
234030	SW-28-35-04-3	Kulvacki	Wellen Boring Ltd.	2014.05.12	21.3		Water Test Hole			
45304	02-SE-04-36-04-3	Saskatchewan Research Council	Hayter Drilling Ltd.	1976.03.14	170.7	Research	Water Test Hole			
116889	5-SW-13-36-04-3	Saskatchewan Ministry of Highways and In	Unknown Client 031	1989.07.25	109.1	Research	Soil Test Hole			
31781	SW-13-36-04-3	Saskatchewan Research Council	Elk Point Drilling Corp.		34.1	Research	Water Test Hole			
210585	05-SW-03-36-04-3	Saskatchewan Research Council	Don Macrae Augering	1976.05.31	34.1	Research	Observation	31.1	32	Unknown
220240	4-SW-02-36-04-3	Unknown Client 031	Unknown Client 031		977.2					
240949	NE-06-35-05-3	Meewasin Valley Authority	Wellen Boring Ltd.	2018.09.20	15.2		Water Test Hole			
240950	NE-06-35-05-3	Meewasin Valley Authority	Wellen Boring Ltd.	2018.09.20	9.1		Water Test Hole			
241193	NW-20-35-05-3	Green Prairie Environmental	Mitchell Drilling Water Wells Ltd.	2019.05.01	29.3		Water Test Hole			
221666	NW-04-36-04-3	Rajakumar	Hayter Drilling Ltd.	2012.09.05	30.5					
43769	SE-04-36-04-3	Goodale Farm	Hayter Drilling Ltd.	1974.10.28	9.8	Research	Observation	8.5	10	Unknown

Stantec Consulting Ltd.
Groundwater Study
1110005444 - R.M. of Corman Park
Table B1 - Non-Domestic Pumping wells Within the Study Area

WWDR	LLD	Well Owner	Driller	Completion Date	Borehole Depth (mBGL)	Water Use	Well Use	Screen Top (mBGL)	Screen Bottom (mBGL)	Aquifer
239801	SE-23-35-05-3	Gillespie Developments	Wellen Boring Ltd.	2018.05.16	9.1		Water Test Hole			
241194	NW-20-35-05-3	Green Prairie Environmental	Mitchell Drilling Water Wells Ltd.	2019.05.02	29.3		Water Test Hole			
211199	8-SE-04-36-04-3	Goodale Farm	Hayter Drilling Ltd.	1974.01.01	152.4	Research	Water Test Hole			
31782	SW-13-36-04-3	Saskatchewan Research Council	Elk Point Drilling Corp.		34.1	Research	Water Test Hole			
219555	4-SW-26-35-05-3	Unknown Client 031	Unknown Client 031		143.3					
234050	SE-29-35-05-3	Kenmore Land Co.	Wellen Boring Ltd.	2014.07.24	15.2		Water Test Hole			
210619	16-NE-18-35-05-3	Grasswood	Hayter Drilling Ltd.	1974.01.01	225.6	Research	Water Test Hole			
212258	8-SE-04-36-04-3	Goodale Farm	Hayter Drilling Ltd.	1974.01.01	98.8	Research	Water Test Hole			
219311	SE-25-35-04-3	Saskatchewan Research Council	Unknown Client 031	1964.10.13	21.3	Research	Soil Test Hole			
43764	05-SW-03-36-04-3	Saskatchewan Research Council	Hayter Drilling Ltd.	1975.05.14	91.4	Research	Water Test Hole			
45653	SW-11-35-04-3	Saskatchewan Research Council	Hayter Drilling Ltd.	1976.03.28	134.1	Research	Water Test Hole			
31884	1-SE-06-35-05-3	Saskatchewan Research Council	Elk Point Drilling Corp.		121.3	Research	Water Test Hole			
211200	8-SE-04-36-04-3	Goodale Farm	Hayter Drilling Ltd.	1974.01.01	140.2	Research	Water Test Hole			
239769	NE-33-35-05-3	Lucyshyn	Wellen Boring Ltd.	2018.06.26	15.2		Water Test Hole			
46739	SW-03-36-04-3	Saskatchewan Research Council	Don Macrae Augering	1976.05.31	32.6	Research	Observation	31.3	32.6	Lower Floral Aquifer
241032	SW-31-35-05-3	Khan	Wellen Boring Ltd.	2020.05.28	12.2		Water Test Hole			
31785	SW-13-36-04-3	Saskatchewan Research Council	Elk Point Drilling Corp.		34.1	Research	Water Test Hole			
241216	NE-20-35-05-3	102047560 Saskatchewan Ltd.	Mitchell Drilling Water Wells Ltd.	2019.10.11	23.2		Water Test Hole			
45656	NW-34-35-04-3	Saskatchewan Research Council	Don Macrae Augering	1976.03.23	9.1	Research	Water Test Hole			
238033	16-NE-28-35-05-3	Saskatoon SPCA	Parkland Drilling Ltd.	2017.07.24	10.7	Other	Withdrawal	2.1	10.1	Surficial Aquifer
241001	NE-06-35-05-3	Meewasin Valley Authority	Wellen Boring Ltd.	2018.09.20	7.6		Water Test Hole			
45302	SW-11-35-04-3	Saskatchewan Research Council	Hayter Drilling Ltd.	1976.03.14	109.7	Research	Water Test Hole			
210620	14-NW-30-35-05-3	University of Saskatchewan	Hayter Drilling Ltd.	1974.01.01	146.3	Research	Water Test Hole			
220559	SW-04-36-04-3	Goodale Farm	Unknown Client 031	1974.12.31	30.5					
43767	SE-04-36-04-3	Goodale Farm	Don Macrae Augering	1974.11.21	9.1	Research	Observation	4	4.9	Surficial Aquifer
31786	SW-13-36-04-3	Saskatchewan Research Council	Elk Point Drilling Corp.		89.3	Research	Water Test Hole			
120923	01-SE-04-36-04-3	Saskatchewan Research Council	Hayter Drilling Ltd.	1974.05.25	30.5	Research	Water Test Hole			
43772	16-NE-10-36-04-3	Saskatchewan Research Council	Hayter Drilling Ltd.	1975.05.17	109.7	Research	Water Test Hole			
231717	11-NW-06-35-05-3	Saskatchewan Research Council	Saskatchewan Ministry of Highways and In	1989.09.21	115.8					
31780	SW-13-36-04-3	Saskatchewan Research Council	Elk Point Drilling Corp.		34.1	Research	Water Test Hole			
220557	SW-14-36-04-3	Midas Oils	Unknown Client 031	1952.07.19	295.7					
234031	SW-28-35-04-3	Kulvacki	Wellen Boring Ltd.	2014.05.12	22.9		Water Test Hole			
241217	NE-20-35-05-3	102047560 Saskatchewan Ltd.	Mitchell Drilling Water Wells Ltd.	2019.10.11	23.2		Water Test Hole			
211197	08-SE-04-36-04-3	Goodale Farm	Elk Point Drilling Corp.	1984.10.10	97.5	Research	Observation		92.7	Bearpaw Ardkenneth Aquifer
45657	NW-34-35-04-3	Saskatchewan Research Council	Don Macrae Augering	1976.03.24	7.6	Research	Water Test Hole			
43768	SE-04-36-04-3	Goodale Farm	Don Macrae Augering	1974.11.22	11.0	Research	Observation		11	Unknown
234029	SW-28-35-04-3	Kulvacki	Wellen Boring Ltd.	2014.05.12	21.3		Water Test Hole			
31783	SW-13-36-04-3	Saskatchewan Research Council	Elk Point Drilling Corp.		34.1	Research	Water Test Hole			
231504	02-SE-04-36-04-3	Saskatchewan Research Council	Hayter Drilling Ltd.	1976.01.01	160.0					
45654	NE-27-35-04-3	Saskatchewan Research Council	Hayter Drilling Ltd.	1976.03.28	195.1	Research	Water Test Hole			
43765	05-SW-03-36-04-3	Saskatchewan Research Council	Hayter Drilling Ltd.	1975.05.17	103.6	Research	Water Test Hole			
43762	NE-33-35-04-3	Goodale Farm	Don Macrae Augering	1974.11.20	9.1	Research	Observation	3.7	4.6	Surficial Aquifer
234001	SE-29-35-05-3	Kenmore Land Co.	Wellen Boring Ltd.	2014.07.24	16.8		Water Test Hole			
43770	SE-04-36-04-3	Goodale Farm	Don Macrae Augering	1974.11.21	7.6	Research	Observation	6.4	7.3	Battleford Formation Till

Stantec Consulting Ltd.
Groundwater Study
1110005444 - R.M. of Corman Park

Table B2 - Existing Monitoring Wells

Development	Well Name	Northing	Easting	Total Depth (mBGL)	Depths to Groundwater (mBGL)	Drilled	Nitrate as N (mg/L)	Chloride (mg/L)
Crossmount	Test Hole 10-1	1276.63	2259.15	6	dry	October 4, 2010	-	-
Crossmount	Test Hole 10-3	1317.69	2294.68	6	5.4	October 5, 2010	-	-
Crossmount	Test Hole 10-5	1352.52	2249.21	6	dry	October 4, 2010	-	-
Crossmount	Test Hole 10-8	1377.02	2105.66	5	4.9	October 6, 2010	-	-
Crossmount	Test Hole 10-10	1383.53	2381.18	4.5	dry	October 5, 2010	-	-
Crossmount	Test Hole 10-13	1449.58	2364.46	3	dry	October 5, 2010	-	-
Crossmount	Test Hole 10-16	1538.99	2351.83	4.5	dry	October 5, 2010	-	-
Crossmount	Test Hole 10-20	1515.27	2437.83	5.75	5.7	October 5, 2010	-	-
Crossmount	Test Hole 10-22	1532.5	2490.23	5.5	5.4	October 5, 2010	-	-
Crossmount	Test Hole 10-24	1581.65	2475.74	5.75	4.57	October 5, 2010	-	-
Crossmount	Test Hole 10-27	1563.5	2212.24	3	dry	October 4, 2010	-	-
Crossmount	Test Hole 10-29	1590.25	2265.29	3	dry	October 4, 2010	-	-
Crossmount	Test Hole 10-32	1606.79	2235.05	4.5	4.1	October 4, 2010	-	-
Edgemont Park	BH 646273-01	5767323.24	386904.53	6	-	April 7, 2017	-	-
Edgemont Park	BH 646273-02	5767025.27	386894.53	5	-	April 7, 2017	-	-
Edgemont Park	BH 646273-03	576741.53	386657.52	15	-	April 7, 2017	-	-
Edgemont Park	BH 646273-04	5767114.52	386643.99	6	-	April 7, 2017	-	-
Edgemont Park	BH 646273-05	5767095.36	386341.86	6	-	April 7, 2017	-	-
Edgemont Park	BH 646273-06	5767505.26	386348.43	5.8	-	April 7, 2017	-	-
Edgemont Park	BH 646273-10	5767682.35	386913.46	5.8	-	April 7, 2017	-	-
Grasswood Estates	BH 101	5765376.985	388679.686	7	-	January 17, 2007	-	-
Grasswood Estates	BH 104	5766116.545	389077.547	8	5.8	January 17, 2007	<0.50	7.4
Grasswood Estates	BH 108	5765324.17	389461.073	8	-	January 17, 2007	-	-
Grasswood Estates	BH 111	5766906.065	389475.333	6	-	February 8, 2008	-	-
Grasswood Estates	BH 201	10456.704	5699.239	4.5	2	June 28, 2012	<0.50	6.7
Grasswood Estates	BH 202	10531.515	5500.573	12	2.2	June 28, 2012	<0.50	5
Grasswood Estates	BH 203	10336.175	5512.287	4.5	2.1	June 28, 2012	51	40.6
Grasswood Estates	BH 204	10026.538	5597.994	4.5	2.3	June 28, 2012	<0.50	3.4
Grasswood Estates	BH 205	9789.895	5285.498	6	4.1	June 28, 2012	0.72	5.2
Grasswood Estates	BH 206	9353.173	5281.355	4.5	2.5	June 28, 2012	<0.50	1.8
Grasswood Estates	BH 207	9457.629	5634.255	4.5	1.5	June 28, 2012	<0.50	98
Grasswood Estates	BH 208	10561.86	5202.47	4.5	2.8	June 28, 2012	7.1	7.9
Grasswood Estates	BH 209	9716.323	5113.209	3.5	dry	June 28, 2012	-	-
Grasswood Estates	BH 210	10105.393	5102.667	4.5	4.2	June 28, 2012	0.61	5.2
Grasswood Estates	BH 211	10732.78	5727.468	5.5	1.2	June 28, 2012	<0.50	1.9
Grasswood Estates	BH 212	9247.058	5809.272	13.5	2.3	June 28, 2012	<0.50	9.1
Grasswood Estates	BH 213	9595.474	5498.802	12.5	3.6	June 28, 2012	<0.50	2.3
Meadow Ridge Estates	RW-14-001D	5772371.4	399549.8	9	2.25	July 23, 2014	<0.50	9.9
Meadow Ridge Estates	RW-14-001S	5772371.4	399549.8	3	3	August 13, 2014	50.6	3.7
Meadow Ridge Estates	RW-14-002D	5772344.2	399810.8	9	2.91	July 23, 2014	-	-
Meadow Ridge Estates	RW-14-002S	5772344.2	399810.8	3	3.42	August 13, 2014	22.4	11.9
Meadow Ridge Estates	RW-14-003D	5772153.9	399547.6	9	3.18	July 23, 2014	-	-
Meadow Ridge Estates	RW-14-003S	5772153.9	399547.6	3	3.45	August 13, 2014	0.86	8.1
Meadow Ridge Estates	RW-14-004D	5772010.9	399472.8	8.5	3.07	July 23, 2014	-	-
Meadow Ridge Estates	RW-14-004S	5772010.9	399472.8	3	3.04	August 13, 2014	0.64	7.5
Meadow Ridge Estates	RW-14-005D	5771686.4	399448.9	8	2.85	July 24, 2014	-	-
Meadow Ridge Estates	RW-14-005S	5771686.4	399448.9	3	2.39	August 13, 2014	0.75	122
Meadow Ridge Estates	RW-14-006D	5771750.4	399832.1	10	4.73	July 24, 2014	<0.50	16.6
Meadow Ridge Estates	RW-14-007D	5772047.6	399848.4	10	4.4	July 24, 2014	<0.50	53.6
Meadow Ridge Estates	RW-14-008D	5772154.9	399976.6	10	3.19	July 24, 2014	<0.50	12.1
Meadow Ridge Estates	RW-14-009D	5772149.9	400134.5	10	3.6	July 24, 2014	<0.50	18.6
Meadow Ridge Estates	RW-14-010D	5772303.8	400133.1	10.4	3.22	July 25, 2014	<0.50	62
Meadow Ridge Estates	RW-14-011S	5771913.6	400147.2	9	3.59	July 25, 2014	16.9	10.2
Meadow Ridge Estates	RW-14-011D	5771913.6	400147.2	3	2.82	August 13, 2014	-	-
Meadow Ridge Estates	RW-14-012D	5771785	400124.5	10	3.71	July 25, 2014	-	-
Meadow Ridge Estates	RW-14-012S	5771785	400124.5	3	dry	August 13, 2014	-	-
Ravenswood	Test Hole 17-2	5766845	386547	5.5	2.03	April 28, 2017	2.76	5
Ravenswood	Test Hole 17-3	5766909	386786	5.5	3.92	April 27, 2017	4.14	9.7
Ravenswood	Test hole 17-4	5766618	386657	6	3.06	April 27, 2017	<0.50	5.6
Ravenswood	Test Hole 17-5	5766447	386413	6	dry	April 26, 2017	-	-
Ravenswood	Test hole 17-6	5766458	386685	6.5	5.02	April 26, 2017	<0.50	20
Ravenswood	Test hole 17-7	5766452	386968	6	5.3	April 26, 2017	<0.50	20.1
Ravenswood	Test Hole 17-9	5766280	386396	5	3.8	April 26, 2017	-	-
Ravenswood	Test Hole 17-10	5766279	386581	6	4.83	April 26, 2017	<0.50	9.4
Ravenswood	Test Hole 17-11	5766260	386763	5	3.85	April 26, 2017	<0.50	6
Ravenswood	Test Hole 17-12	5766209	386758	15	3.98	April 27, 2017	<0.50	5.7
Ravenswood	Test Hole 17-12A	5766209	386758	6	4.28	April 27, 2017	<0.50	7.1
Tuscan Ridge	Test Hole 13-1	5773813	401881	8.5	dry	November 27, 2013	-	-
Tuscan Ridge	Test Hole 13-2	5773854	401630	3	dry	November 26, 2013	<0.50	23.5
Tuscan Ridge	Test Hole 13-3	5773871	401405	9	dry	November 27, 2013	<0.50	25.5
Tuscan Ridge	Test Hole 13-4	5773863	401166	3	dry	November 26, 2013	-	-
Tuscan Ridge	Test Hole 13-5	5773659	401180	9	dry	November 27, 2013	<0.50	4.6
Tuscan Ridge	Test Hole 13-6	5773392	401200	3	dry	November 26, 2013	-	-
Tuscan Ridge	Test Hole 13-7	5773227	401174	9	8.2	November 27, 2013	-	-
Tuscan Ridge	Test Hole 13-8	5773348	401338	3	dry	November 26, 2013	-	-
Tuscan Ridge	Test Hole 13-9	5773333	401522	9	8.6	November 27, 2013	0.58	16.4
Tuscan Ridge	Test Hole 13-10	5773537	401348	9	4.2	November 27, 2013	3.15	99.5
Tuscan Ridge	Test Hole 13-11	57735670	401474	10	dry	November 27, 2013	-	-
Tuscan Ridge	Test Hole 13-12	57735670	401474	18	17.7	November 27, 2013	-	-
Tuscan Ridge	Test Hole 13-13	57735670	401474	4.5	dry	November 27, 2013	-	-
Tuscan Ridge	Test Hole 13-14	5773537	401558	6	2.7	November 26, 2013	11.8	92.1
Tuscan Ridge	Test Hole 13-15	5773664	401761	9	3.9	November 27, 2013	<0.50	41.5
Tuscan Ridge	Test Hole 13-16	5773514	401813	3	1.4	November 26, 2013	<0.50	138

Notes: - indicates no information avaialable.

mBGL indicates meters below ground level

N indicates Nitrates

APPENDIX C

Water Well Driller's Reports

Water Well Driller's Report

8-Jun-2023
WSaskWWDR01
(c) Water Security Agency

Well Name: Moon Lake Gardens WWDR #: 9561

Well Location

Land Location	16-NE-01-35-06-3	Location of Well (in Quarter)	
LSD	16	ft from N/S Boundary	
Reserve		ft from E/W Boundary	
RM:	344		
NTS Map:	72O15	Major Basin:	
Elevation (ft)	1575	SubBasin:	30
Aquifer			

Well Information

Driller	Hayter Drilling Ltd.
Completion Date	1973.10.18
Hole #	
Install Method	Drilled
Borehole Depth (ft)	405
Bit Dia (in)	0
Water Level	0
Flowing Head	0
Water Use	Irrigation
Well Use	Water Test Hole
Completion Method	
E-Log	None

Well Casings

Length (ft)	Btm (ft)	Dia (in)	Material

Well Screens

Length (ft)	Bottom (ft)	Dia (in)	Slot (in)	Material

Pump Test

Draw Down	0	ft
Duration	0	hrs
Pumping Rate	0	igpm
Temperature	0	deg. F
Rec. Pumping Rate	0	igpm

Lithology List

Depth (ft):	Material	Colour	Description
7	Sand	Grey	Fine
13	Silt	Brown	Unknown
22	Sand	Brown	Fine
27	Silt	Brown	Unknown
29	Sand	Grey	Fine
110	Silt	Grey	Unknown
329	Till	Grey	Sand Streaks
355	Sand	Grey	Noncalcareous
405	Silt	Grey	Noncalcareous

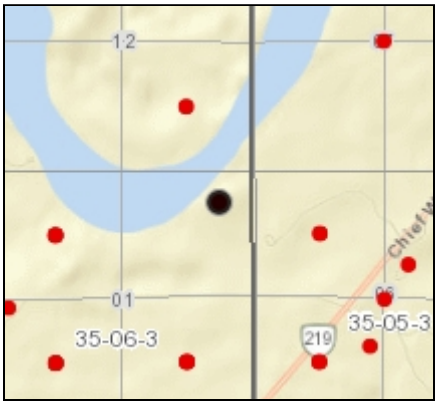

Water Well Driller's Report

5-Jul-2023

WSaskWWDR01

(c) Water Security Agency

Well Name: Saskatchewan Research Council

WWDR #: 31757

Well Location

Land Location	SW-19-35-04-3	Location of Well (in Quarter)	
LSD		ft from N/S Boundary	
Reserve		ft from E/W Boundary	
RM:			
NTS Map:		Major Basin:	
Elevation (ft)	1680	SubBasin:	30
Aquifer			

Well Information

Driller	Elk Point Drilling Corp.
Completion Date	1966.09.01
Hole #	
Install Method	Drilled
Borehole Depth (ft)	464
Bit Dia (in)	0
Water Level	0
Flowing Head	0
Water Use	Research
Well Use	Water Test Hole
Completion Method	
E-Log	Colctd

Well Casings

Length (ft)	Btm (ft)	Dia (in)	Material

Well Screens

Length (ft)	Bottom (ft)	Dia (in)	Slot (in)	Material

Pump Test

Draw Down	0	ft
Duration	0	hrs
Pumping Rate	0	igpm
Temperature	0	deg. F
Rec. Pumping Rate	0	igpm

Lithology List

Depth (ft):	Material	Colour	Description
4	Sand	Unknown	Oxidized
87	Silty Clay	Unknown	Unoxidized
446	Till	Unknown	Unoxidized
464	Clay	Unknown	Noncalcareous

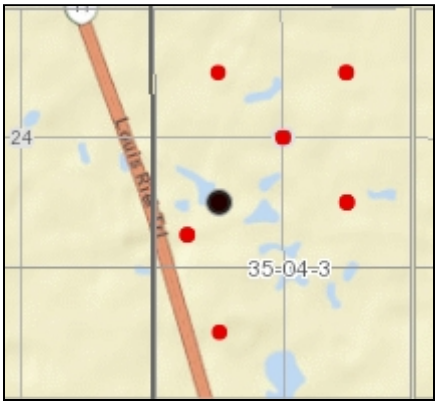

Water Well Driller's Report

5-Jul-2023
WSaskWWDR01
(c) Water Security Agency

Well Name: Canada Cement

WWDR #: 31768

Well Location

Land Location	NE-35-35-04-3	Location of Well (in Quarter)	
LSD		ft from N/S Boundary	
Reserve		ft from E/W Boundary	
RM:			
NTS Map:		Major Basin:	
Elevation (ft)	1700	SubBasin:	30
Aquifer			

Well Information

Driller	International Water Supply Ltd.
Completion Date	
Hole #	
Install Method	Drilled
Borehole Depth (ft)	370
Bit Dia (in)	4.7
Water Level	0
Flowing Head	0
Water Use	Industrial
Well Use	Water Test Hole
Completion Method	
E-Log	None

Well Casings

Length (ft)	Btm (ft)	Dia (in)	Material

Well Screens

Length (ft)	Bottom (ft)	Dia (in)	Slot (in)	Material

Pump Test

Draw Down	0	ft
Duration	0	hrs
Pumping Rate	0	igpm
Temperature	0	deg. F
Rec. Pumping Rate	0	igpm

Lithology List

Depth (ft):	Material	Colour	Description
1	Topsoil	Unknown	Unknown
20	Clay	Brown	Stoney
70	Clay	Grey	Stoney
90	Sandy Clay	Grey	Soft
99	Clay	Grey	Boulders
100	Limestone	Unknown	Unknown
103	Clay	Grey	Stoney
122	Sandy Clay	Unknown	Silty
247	Clay	Grey	Boulders
248	Gravel	Unknown	Unknown
256	Clay	Grey	Stoney
280	Shale	Unknown	Unknown
370	Shale	Unknown	Sand Streaks

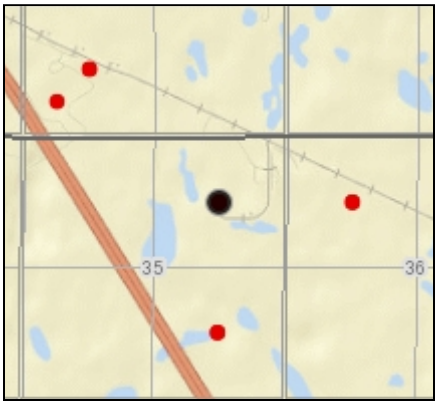

Water Well Driller's Report

7-Jun-2023
WSaskWWDR01
(c) Water Security Agency

Well Name: Saskatchewan Research Council WWDR #: 31779

Well Location

Land Location	SW-13-36-04-3	Location of Well (in Quarter)	
LSD		ft from N/S Boundary	
Reserve		ft from E/W Boundary	
RM:			
NTS Map:		Major Basin:	
Elevation (ft)	1775	SubBasin:	30
Aquifer			

Well Information

Driller	Elk Point Drilling Corp.
Completion Date	
Hole #	002
Install Method	Drilled
Borehole Depth (ft)	112
Bit Dia (in)	0
Water Level	0
Flowing Head	0
Water Use	Research
Well Use	Water Test Hole
Completion Method	
E-Log	Colctd

Well Casings

Length (ft)	Btm (ft)	Dia (in)	Material

Well Screens

Length (ft)	Bottom (ft)	Dia (in)	Slot (in)	Material

Pump Test

Draw Down	0	ft
Duration	0	hrs
Pumping Rate	0	igpm
Temperature	0	deg. F
Rec. Pumping Rate	0	igpm

Lithology List

Depth (ft):	Material	Colour	Description
7	Sand	Unknown	Coarse
29	Till	Yellow	Unknown
49	Till	Grey	Unknown
63	Till	Green	Unknown
112	Till	Grey	Unknown

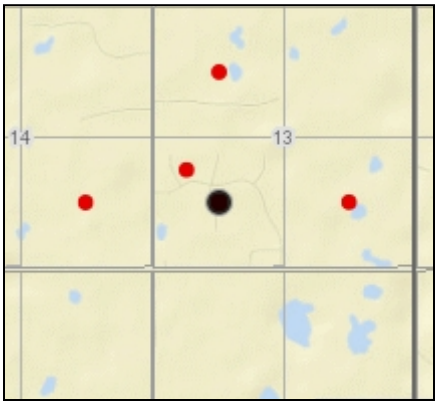

Water Well Driller's Report

5-Jul-2023
WSaskWWDR01
(c) Water Security Agency

Well Name: Saskatchewan Research Council WWDR #: 31780

Well Location

Land Location	SW-13-36-04-3	Location of Well (in Quarter)	
LSD		ft from N/S Boundary	
Reserve		ft from E/W Boundary	
RM:			
NTS Map:		Major Basin:	
Elevation (ft)	1775	SubBasin:	30
Aquifer			

Well Information

Driller	Elk Point Drilling Corp.
Completion Date	
Hole #	003
Install Method	Drilled
Borehole Depth (ft)	112
Bit Dia (in)	0
Water Level	0
Flowing Head	0
Water Use	Research
Well Use	Water Test Hole
Completion Method	
E-Log	Colctd

Well Casings

Length (ft)	Btm (ft)	Dia (in)	Material

Well Screens

Length (ft)	Bottom (ft)	Dia (in)	Slot (in)	Material

Pump Test

Draw Down	0	ft
Duration	0	hrs
Pumping Rate	0	igpm
Temperature	0	deg. F
Rec. Pumping Rate	0	igpm

Lithology List

Depth (ft):	Material	Colour	Description
17	Till	Yellow	Sandy
44	Till	Grey	Unknown
78	Till	Green	Unknown
112	Till	Grey	Unknown

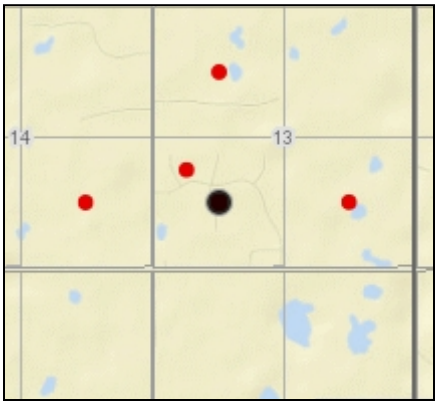

Water Well Driller's Report

5-Jul-2023

WSaskWWDR01

(c) Water Security Agency

Well Name: Saskatchewan Research Council

WWDR #: 31781

Well Location

Land Location	SW-13-36-04-3	Location of Well (in Quarter)	
LSD		ft from N/S Boundary	
Reserve		ft from E/W Boundary	
RM:			
NTS Map:		Major Basin:	
Elevation (ft)	1775	SubBasin:	30
Aquifer			

Well Information

Driller	Elk Point Drilling Corp.
Completion Date	
Hole #	004
Install Method	Drilled
Borehole Depth (ft)	112
Bit Dia (in)	0
Water Level	0
Flowing Head	0
Water Use	Research
Well Use	Water Test Hole
Completion Method	
E-Log	Colctd

Well Casings

Length (ft)	Btm (ft)	Dia (in)	Material

Well Screens

Length (ft)	Bottom (ft)	Dia (in)	Slot (in)	Material

Pump Test

Draw Down	0	ft
Duration	0	hrs
Pumping Rate	0	igpm
Temperature	0	deg. F
Rec. Pumping Rate	0	igpm

Lithology List

Depth (ft):	Material	Colour	Description
24	Till	Yellow	Silty
45	Till	Grey	Unknown
78	Till	Green	Unknown
112	Till	Grey	Unknown

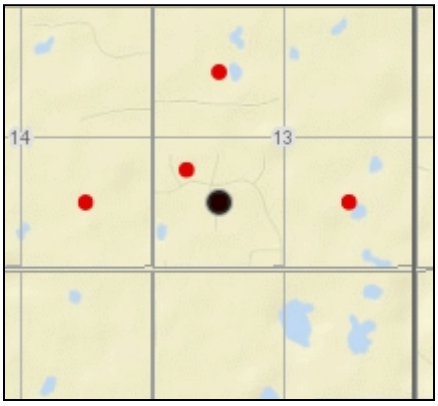

Water Well Driller's Report

5-Jul-2023

WSaskWWDR01

(c) Water Security Agency

Well Name: Saskatchewan Research Council

WWDR #: 31782

Well Location

Land Location	SW-13-36-04-3	Location of Well (in Quarter)	
LSD		ft from N/S Boundary	
Reserve		ft from E/W Boundary	
RM:			
NTS Map:		Major Basin:	
Elevation (ft)	1775	SubBasin:	30
Aquifer			

Well Information

Driller	Elk Point Drilling Corp.
Completion Date	
Hole #	005
Install Method	Drilled
Borehole Depth (ft)	112
Bit Dia (in)	0
Water Level	0
Flowing Head	0
Water Use	Research
Well Use	Water Test Hole
Completion Method	
E-Log	Colctd

Well Casings

Length (ft)	Btm (ft)	Dia (in)	Material

Well Screens

Length (ft)	Bottom (ft)	Dia (in)	Slot (in)	Material

Pump Test

Draw Down	0	ft
Duration	0	hrs
Pumping Rate	0	igpm
Temperature	0	deg. F
Rec. Pumping Rate	0	igpm

Lithology List

Depth (ft):	Material	Colour	Description
16	Till	Green	Unknown
112	Till	Grey	Unknown

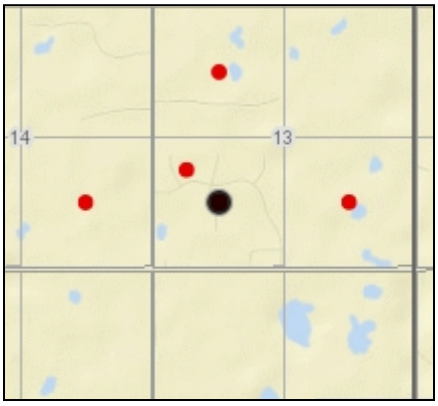

Water Well Driller's Report

5-Jul-2023
WSaskWWDR01
(c) Water Security Agency

Well Name: Saskatchewan Research Council WWDR #: 31783

Well Location

Land Location	SW-13-36-04-3	Location of Well (in Quarter)	
LSD		ft from N/S Boundary	
Reserve		ft from E/W Boundary	
RM:			
NTS Map:		Major Basin:	
Elevation (ft)	1775	SubBasin:	30
Aquifer			

Well Information

Driller	Elk Point Drilling Corp.
Completion Date	
Hole #	006
Install Method	Drilled
Borehole Depth (ft)	112
Bit Dia (in)	0
Water Level	0
Flowing Head	0
Water Use	Research
Well Use	Water Test Hole
Completion Method	
E-Log	Colctd

Well Casings

Length (ft)	Btm (ft)	Dia (in)	Material

Well Screens

Length (ft)	Bottom (ft)	Dia (in)	Slot (in)	Material

Pump Test

Draw Down	0	ft
Duration	0	hrs
Pumping Rate	0	igpm
Temperature	0	deg. F
Rec. Pumping Rate	0	igpm

Lithology List

Depth (ft):	Material	Colour	Description
34	Till	Yellow	Unknown
59	Till	Grey	Sandy
73	Till	Grey	Unknown
76	Sand	Unknown	Medium-coarse
112	Till	Grey	Unknown

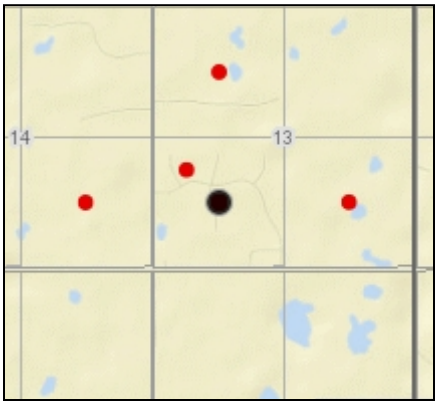

Water Well Driller's Report

5-Jul-2023
WSaskWWDR01
(c) Water Security Agency

Well Name: Saskatchewan Research Council WWDR #: 31784

Well Location

Land Location	SW-13-36-04-3	Location of Well (in Quarter)	
LSD		ft from N/S Boundary	
Reserve		ft from E/W Boundary	
RM:			
NTS Map:		Major Basin:	
Elevation (ft)	1775	SubBasin:	30
Aquifer			

Well Information

Driller	Elk Point Drilling Corp.
Completion Date	
Hole #	007
Install Method	Drilled
Borehole Depth (ft)	113
Bit Dia (in)	0
Water Level	0
Flowing Head	0
Water Use	Research
Well Use	Water Test Hole
Completion Method	
E-Log	Colctd

Well Casings

Length (ft)	Btm (ft)	Dia (in)	Material

Well Screens

Length (ft)	Bottom (ft)	Dia (in)	Slot (in)	Material

Pump Test

Draw Down	0	ft
Duration	0	hrs
Pumping Rate	0	igpm
Temperature	0	deg. F
Rec. Pumping Rate	0	igpm

Lithology List

Depth (ft):	Material	Colour	Description
25	Till	Yellow	Unknown
54	Till	Grey	Unknown
88	Till	Green	Unknown
113	Till	Grey	Unknown

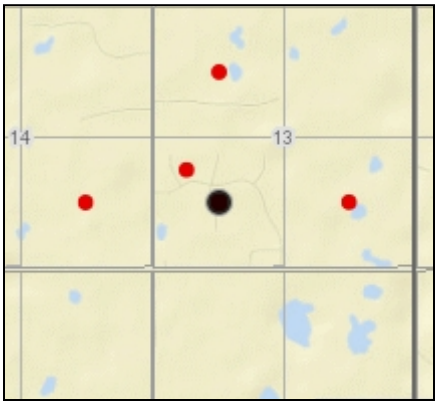

Water Well Driller's Report

5-Jul-2023

WSaskWWDR01

(c) Water Security Agency

Well Name: Saskatchewan Research Council

WWDR #: 31785

Well Location

Land Location	SW-13-36-04-3	Location of Well (in Quarter)	
LSD		ft from N/S Boundary	
Reserve		ft from E/W Boundary	
RM:			
NTS Map:		Major Basin:	
Elevation (ft)	1775	SubBasin:	30
Aquifer			

Well Information

Driller	Elk Point Drilling Corp.
Completion Date	
Hole #	008
Install Method	Drilled
Borehole Depth (ft)	112
Bit Dia (in)	0
Water Level	0
Flowing Head	0
Water Use	Research
Well Use	Water Test Hole
Completion Method	
E-Log	Colctd

Well Casings

Length (ft)	Btm (ft)	Dia (in)	Material

Well Screens

Length (ft)	Bottom (ft)	Dia (in)	Slot (in)	Material

Pump Test

Draw Down	0	ft
Duration	0	hrs
Pumping Rate	0	igpm
Temperature	0	deg. F
Rec. Pumping Rate	0	igpm

Lithology List

Depth (ft):	Material	Colour	Description
21	Till	Yellow	Unknown
46	Till	Grey	Unknown
74	Till	Green	Unknown
112	Till	Grey	Unknown

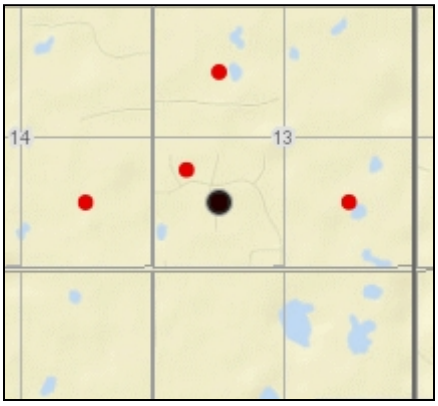

Water Well Driller's Report

5-Jul-2023
WSaskWWDR01
(c) Water Security Agency

Well Name: Saskatchewan Research Council
WWDR #: 31786

Well Location

Land Location	SW-13-36-04-3	Location of Well (in Quarter)	
LSD		ft from N/S Boundary	
Reserve		ft from E/W Boundary	
RM:			
NTS Map:		Major Basin:	
Elevation (ft)	1775	SubBasin:	30
Aquifer			

Well Information

Driller	Elk Point Drilling Corp.
Completion Date	
Hole #	
Install Method	Drilled
Borehole Depth (ft)	293
Bit Dia (in)	0
Water Level	0
Flowing Head	0
Water Use	Research
Well Use	Water Test Hole
Completion Method	
E-Log	Colctd

Well Casings

Length (ft)	Btm (ft)	Dia (in)	Material

Well Screens

Length (ft)	Bottom (ft)	Dia (in)	Slot (in)	Material

Pump Test

Draw Down	0	ft
Duration	0	hrs
Pumping Rate	0	igpm
Temperature	0	deg. F
Rec. Pumping Rate	0	igpm

Lithology List

Depth (ft):	Material	Colour	Description
37	Till	Yellow	Unknown
44	Till	Grey	Unknown
75	Till	Green	Unknown
156	Till	Grey	Unknown
184	Silt	Grey	Clayey
189	Sand	Grey	Medium-coarse
205	Silt	Grey	Clayey
217	Sand	Grey	Medium-coarse
252	Till	Grey	Unknown
293	Shale	Grey	Silty

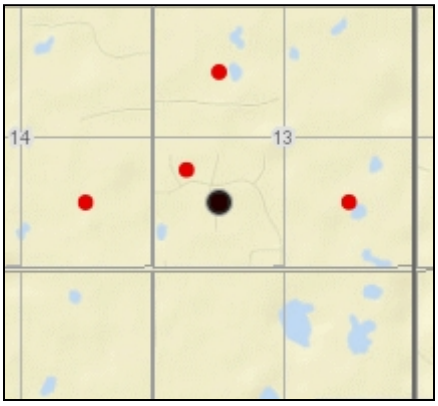

Water Well Driller's Report

5-Jul-2023
WSaskWWDR01
(c) Water Security Agency

Well Name: Saskatchewan Research Council WWDR #: 31884

Well Location

Land Location	1-SE-06-35-05-3	Location of Well (in Quarter)	
LSD	1	ft from N/S Boundary	
Reserve		ft from E/W Boundary	
RM:	344		
NTS Map:		Major Basin:	
Elevation (ft)	1640	SubBasin:	30
Aquifer			

Well Information

Driller	Elk Point Drilling Corp.
Completion Date	
Hole #	
Install Method	Drilled
Borehole Depth (ft)	398
Bit Dia (in)	0
Water Level	0
Flowing Head	0
Water Use	Research
Well Use	Water Test Hole
Completion Method	
E-Log	Recd

Well Casings

Length (ft)	Btm (ft)	Dia (in)	Material

Well Screens

Length (ft)	Bottom (ft)	Dia (in)	Slot (in)	Material

Pump Test

Draw Down	0	ft
Duration	0	hrs
Pumping Rate	0	igpm
Temperature	0	deg. F
Rec. Pumping Rate	0	igpm

Lithology List

Depth (ft):	Material	Colour	Description
12	Sand	Unknown	Oxidized
20	Silt	Unknown	Oxidized
32	Sand	Unknown	Unoxidized
64	Silt	Unknown	Unoxidized
70	Sand	Unknown	Unknown
133	Silt	Unknown	Unoxidized
145	Till	Unknown	Unoxidized
153	Sand	Unknown	Unoxidized
274	Till	Unknown	Unoxidized
276	Sand	Unknown	Unknown
305	Till	Unknown	Unoxidized
316	Gravel	Unknown	Unknown
366	Till	Unknown	Unoxidized
369	Sand	Unknown	Unknown

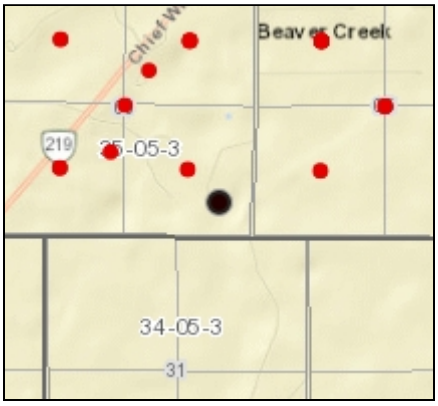

(c) Water Security Agency

398	Clay	Unknown	Noncalcareous

Water Well Driller's Report

14-Jun-2023
WSaskWWDR01
(c) Water Security Agency

Well Name: Goodale Farm

WWDR #: 43761

Well Location

Land Location	NE-33-35-04-3	Location of Well (in Quarter)	
LSD		ft from N/S Boundary	
Reserve		ft from E/W Boundary	
RM:			
NTS Map:		Major Basin:	
Elevation (ft)	1662	SubBasin:	30
Aquifer			

Well Information

Driller	Don Macrae Augering
Completion Date	1974.11.20
Hole #	010
Install Method	Augered
Borehole Depth (ft)	26
Bit Dia (in)	0
Water Level	0
Flowing Head	0
Water Use	Research
Well Use	Observation
Completion Method	Well Screen And Gravel Pack
E-Log	None

Well Casings

Length (ft)	Btm (ft)	Dia (in)	Material
0	15	1.5	Plastic

Well Screens

Length (ft)	Bottom (ft)	Dia (in)	Slot (in)	Material
4	19	2	8	Plastic

Pump Test

Draw Down	0	ft
Duration	0	hrs
Pumping Rate	0	igpm
Temperature	0	deg. F
Rec. Pumping Rate	0	igpm

Lithology List

Depth (ft):	Material	Colour	Description
1	Sand	Unknown	Silty
8	Silt	Yellow	Sandy
12	Sand	Grey	Silty
26	Silt	Grey	Unknown

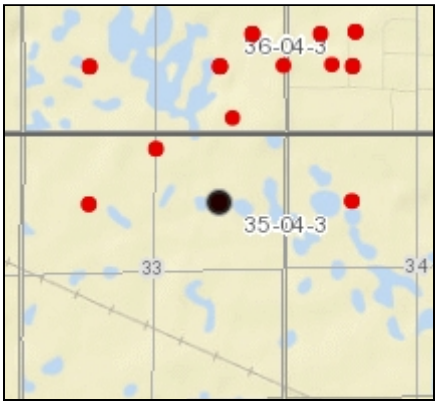

Water Well Driller's Report

14-Jun-2023
WSaskWWDR01
(c) Water Security Agency

Well Name: Goodale Farm

WWDR #: 43762

Well Location

Land Location	NE-33-35-04-3	Location of Well (in Quarter)	
LSD		ft from N/S Boundary	
Reserve		ft from E/W Boundary	
RM:			
NTS Map:		Major Basin:	
Elevation (ft)	1662	SubBasin:	30
Aquifer			

Well Information

Driller	Don Macrae Augering
Completion Date	1974.11.20
Hole #	013
Install Method	Augered
Borehole Depth (ft)	30
Bit Dia (in)	0
Water Level	6
Flowing Head	0
Water Use	Research
Well Use	Observation
Completion Method	Well Screen And Gravel Pack
E-Log	None

Well Casings

Length (ft)	Btm (ft)	Dia (in)	Material
0	12	1.5	Plastic

Well Screens

Length (ft)	Bottom (ft)	Dia (in)	Slot (in)	Material
3	15	2	8	Plastic

Pump Test

Draw Down	0	ft
Duration	0	hrs
Pumping Rate	0	igpm
Temperature	0	deg. F
Rec. Pumping Rate	0	igpm

Lithology List

Depth (ft):	Material	Colour	Description
11	Silt	Yellow	Unknown
14	Sand	Unknown	Silty
20	Silt	Grey	Unknown
30	Silt	Unknown	Sandy

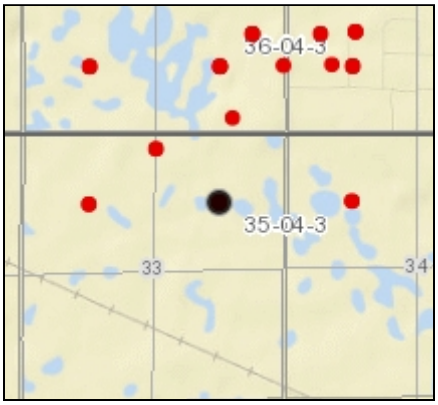

Water Well Driller's Report

5-Jul-2023
WSaskWWDR01
(c) Water Security Agency

Well Name: Xplore It Drilling Ltd. WWDR #: 43763

Well Location

Land Location	SE-03-36-04-3	Location of Well (in Quarter)	
LSD		ft from N/S Boundary	
Reserve		ft from E/W Boundary	
RM:			
NTS Map:		Major Basin:	
Elevation (ft)	1726	SubBasin:	30
Aquifer			

Well Information

Driller	Hayter Drilling Ltd.
Completion Date	1975.07.17
Hole #	
Install Method	Drilled
Borehole Depth (ft)	290
Bit Dia (in)	4.5
Water Level	0
Flowing Head	0
Water Use	Research
Well Use	Water Test Hole
Completion Method	
E-Log	Colctd

Well Casings

Length (ft)	Btm (ft)	Dia (in)	Material

Well Screens

Length (ft)	Bottom (ft)	Dia (in)	Slot (in)	Material

Pump Test

Draw Down	0	ft
Duration	0	hrs
Pumping Rate	0	igpm
Temperature	0	deg. F
Rec. Pumping Rate	0	igpm

Lithology List

Depth (ft):	Material	Colour	Description
22	Silt	Yellow	Sandy
32	Till	Green	Sandy
47	Till	Grey	Calcareous
98	Till	Grey	Hard
125	Sand	Unknown	Medium
145	Sand	Unknown	Fine-medium
168	Till	Unknown	Oxidized
222	Till	Unknown	Coarse
290	Clay	Grey	Silty

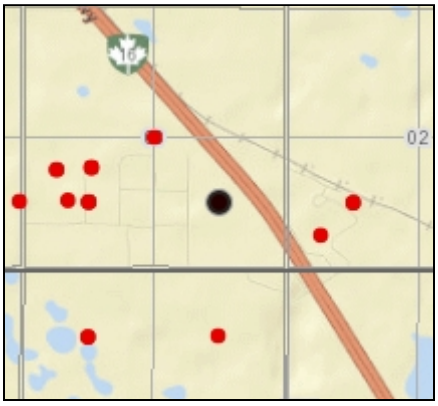

Water Well Driller's Report

5-Jul-2023
WSaskWWDR01
(c) Water Security Agency

Well Name: Saskatchewan Research Council WWDR #: 43764

Well Location

Land Location	05-SW-03-36-04-3	Location of Well (in Quarter)	
LSD	05	ft from N/S Boundary	
Reserve		ft from E/W Boundary	
RM:	344		
NTS Map:	73B01	Major Basin:	
Elevation (ft)	1715	SubBasin:	30
Aquifer			

Well Information

Driller	Hayter Drilling Ltd.
Completion Date	1975.05.14
Hole #	00000020
Install Method	Drilled
Borehole Depth (ft)	300
Bit Dia (in)	0
Water Level	0
Flowing Head	0
Water Use	Research
Well Use	Water Test Hole
Completion Method	
E-Log	Colctd

Well Casings

Length (ft)	Btm (ft)	Dia (in)	Material

Well Screens

Length (ft)	Bottom (ft)	Dia (in)	Slot (in)	Material

Pump Test

Draw Down	0	ft
Duration	0	hrs
Pumping Rate	0	igpm
Temperature	0	deg. F
Rec. Pumping Rate	0	igpm

Lithology List

Depth (ft):	Material	Colour	Description
6	Sand	Grey	Fine
116	Till	Unknown	Sand Streaks
118	Clay	Grey	Silty
202	Till	Grey	Calcareous
220	Silt	Grey	Noncalcareous
225	Silt	Unknown	Sandy
231	Sand	Grey	Fine
258	Silt	Unknown	Sandy
269	Silt	Grey	Sandy
300	Silt	Grey	Noncalcareous

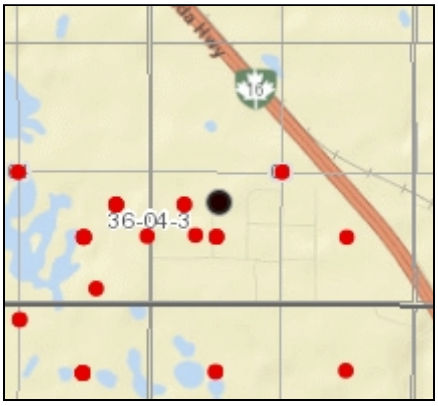

Water Well Driller's Report

5-Jul-2023
WSaskWWDR01
(c) Water Security Agency

Well Name: Saskatchewan Research Council WWDR #: 43765

Well Location

Land Location	05-SW-03-36-04-3	Location of Well (in Quarter)	
LSD	05	ft from N/S Boundary	
Reserve		ft from E/W Boundary	
RM:	344		
NTS Map:	73B01	Major Basin:	
Elevation (ft)	1703	SubBasin:	30
Aquifer			

Well Information

Driller	Hayter Drilling Ltd.
Completion Date	1975.05.17
Hole #	00000021
Install Method	Drilled
Borehole Depth (ft)	340
Bit Dia (in)	0
Water Level	0
Flowing Head	0
Water Use	Research
Well Use	Water Test Hole
Completion Method	
E-Log	Colctd

Well Casings

Length (ft)	Btm (ft)	Dia (in)	Material

Well Screens

Length (ft)	Bottom (ft)	Dia (in)	Slot (in)	Material

Pump Test

Draw Down	0	ft
Duration	0	hrs
Pumping Rate	0	igpm
Temperature	0	deg. F
Rec. Pumping Rate	0	igpm

Lithology List

Depth (ft):	Material	Colour	Description
3	Sand	Grey	Fine
22	Silt	Grey	Calcareous
32	Silt	Grey	Till Streaks
205	Till	Grey	Sandy
279	Silt	Grey	Noncalcareous
298	Sand	Grey	Silty
302	Bentonite	Grey	Unknown
340	Silt	Grey	Noncalcareous

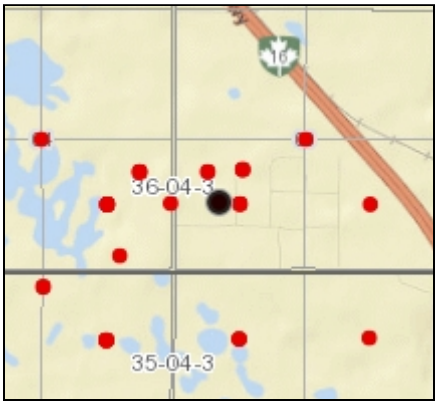

Water Well Driller's Report

14-Jun-2023
WSaskWWDR01
(c) Water Security Agency

Well Name: Goodale Farm

WWDR #: 43766

Well Location

Land Location	NE-33-35-04-3	Location of Well (in Quarter)	
LSD		ft from N/S Boundary	
Reserve		ft from E/W Boundary	
RM:			
NTS Map:		Major Basin:	
Elevation (ft)	1668	SubBasin:	30
Aquifer	10		

Well Information

Driller	Don Macrae Augering
Completion Date	1974.11.20
Hole #	012
Install Method	Augered
Borehole Depth (ft)	30
Bit Dia (in)	0
Water Level	8
Flowing Head	0
Water Use	Research
Well Use	Observation
Completion Method	Well Screen And Gravel Pack
E-Log	None

Well Casings

Length (ft)	Btm (ft)	Dia (in)	Material
0	18	1.5	Plastic

Well Screens

Length (ft)	Bottom (ft)	Dia (in)	Slot (in)	Material
4	22	2	8	Plastic

Pump Test

Draw Down	0	ft
Duration	0	hrs
Pumping Rate	0	igpm
Temperature	0	deg. F
Rec. Pumping Rate	0	igpm

Lithology List

Depth (ft):	Material	Colour	Description
6	Sand	Unknown	Silty
10	Silt	Unknown	Sandy
22	Sand	Unknown	Silty
30	Silt	Grey	Unknown

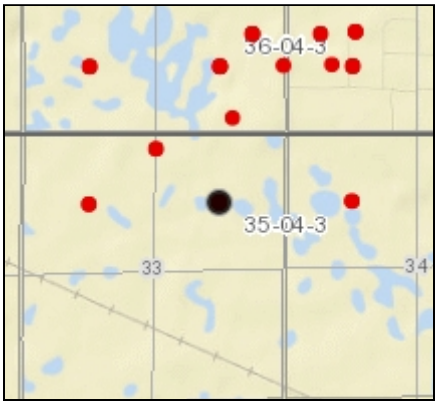

Water Well Driller's Report

5-Jul-2023
WSaskWWDR01
(c) Water Security Agency

Well Name: Xplore It Drilling Ltd. WWDR #: 43763

Well Location

Land Location	SE-03-36-04-3	Location of Well (in Quarter)	
LSD		ft from N/S Boundary	
Reserve		ft from E/W Boundary	
RM:			
NTS Map:		Major Basin:	
Elevation (ft)	1726	SubBasin:	30
Aquifer			

Well Information

Driller	Hayter Drilling Ltd.
Completion Date	1975.07.17
Hole #	
Install Method	Drilled
Borehole Depth (ft)	290
Bit Dia (in)	4.5
Water Level	0
Flowing Head	0
Water Use	Research
Well Use	Water Test Hole
Completion Method	
E-Log	Colctd

Well Casings

Length (ft)	Btm (ft)	Dia (in)	Material

Well Screens

Length (ft)	Bottom (ft)	Dia (in)	Slot (in)	Material

Pump Test

Draw Down	0	ft
Duration	0	hrs
Pumping Rate	0	igpm
Temperature	0	deg. F
Rec. Pumping Rate	0	igpm

Lithology List

Depth (ft):	Material	Colour	Description
22	Silt	Yellow	Sandy
32	Till	Green	Sandy
47	Till	Grey	Calcareous
98	Till	Grey	Hard
125	Sand	Unknown	Medium
145	Sand	Unknown	Fine-medium
168	Till	Unknown	Oxidized
222	Till	Unknown	Coarse
290	Clay	Grey	Silty

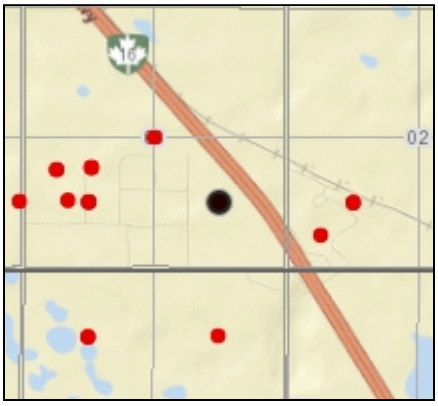

Water Well Driller's Report

5-Jul-2023
WSaskWWDR01
(c) Water Security Agency

Well Name: Goodale Farm

WWDR #: 43768

Well Location

Land Location	SE-04-36-04-3	Location of Well (in Quarter)	
LSD		ft from N/S Boundary	
Reserve		ft from E/W Boundary	
RM:			
NTS Map:		Major Basin:	
Elevation (ft)	1676	SubBasin:	30
Aquifer			

Well Information

Driller	Don Macrae Augering
Completion Date	1974.11.22
Hole #	016
Install Method	Augered
Borehole Depth (ft)	36
Bit Dia (in)	0
Water Level	13
Flowing Head	0
Water Use	Research
Well Use	Observation
Completion Method	Well Screen And Gravel Pack
E-Log	None

Well Casings

Length (ft)	Btm (ft)	Dia (in)	Material
0	31	1.5	Plastic

Well Screens

Length (ft)	Bottom (ft)	Dia (in)	Slot (in)	Material
5	36	2	8	Plastic

Pump Test

Draw Down	0	ft
Duration	0	hrs
Pumping Rate	0	igpm
Temperature	0	deg. F
Rec. Pumping Rate	0	igpm

Lithology List

Depth (ft):	Material	Colour	Description
2	Sand	Grey	Silty
12	Silt	Yellow	Unknown
18	Sand	Grey	Silty
28	Silt	Grey	Sandy
36	Sand	Grey	Silty

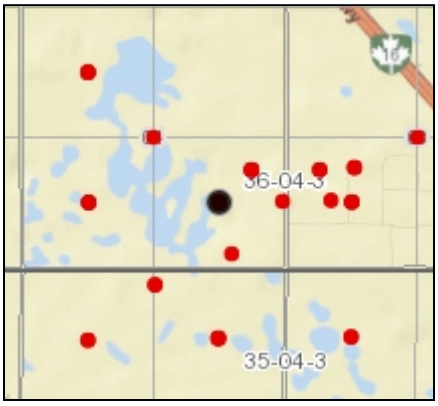

Water Well Driller's Report

14-Jun-2023
WSaskWWDR01
(c) Water Security Agency

Well Name: Goodale Farm WWDR #: 43769

Well Location

Land Location	SE-04-36-04-3	Location of Well (in Quarter)	
LSD		ft from N/S Boundary	
Reserve		ft from E/W Boundary	
RM:			
NTS Map:		Major Basin:	
Elevation (ft)	1676	SubBasin:	30
Aquifer			

Well Information

Driller	Hayter Drilling Ltd.
Completion Date	1974.10.28
Hole #	009
Install Method	Drilled
Borehole Depth (ft)	32
Bit Dia (in)	14.7
Water Level	12
Flowing Head	0
Water Use	Research
Well Use	Observation
Completion Method	Well Screen
E-Log	Colctd

Well Casings

Length (ft)	Btm (ft)	Dia (in)	Material
0	27	7	Steel

Well Screens

Length (ft)	Bottom (ft)	Dia (in)	Slot (in)	Material
5	33	4	8	Steel Casing

Pump Test

Draw Down	0	ft
Duration	0	hrs
Pumping Rate	0	igpm
Temperature	0	deg. F
Rec. Pumping Rate	0	igpm

Lithology List

Depth (ft):	Material	Colour	Description

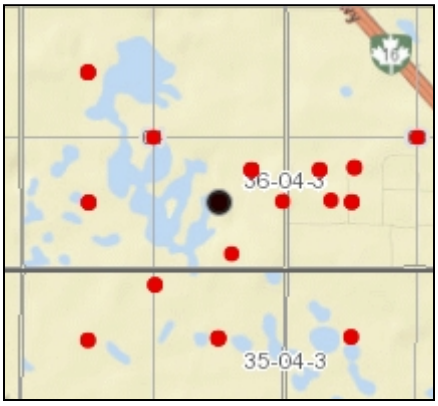

Water Well Driller's Report

14-Jun-2023
WSaskWWDR01
(c) Water Security Agency

Well Name: Goodale Farm

WWDR #: 43770

Well Location

Land Location	SE-04-36-04-3	Location of Well (in Quarter)	
LSD		ft from N/S Boundary	
Reserve		ft from E/W Boundary	
RM:			
NTS Map:		Major Basin:	
Elevation (ft)	1688	SubBasin:	30
Aquifer			

Well Information

Driller	Don Macrae Augering
Completion Date	1974.11.21
Hole #	015
Install Method	Augered
Borehole Depth (ft)	25
Bit Dia (in)	0
Water Level	10
Flowing Head	0
Water Use	Research
Well Use	Observation
Completion Method	Well Screen And Gravel Pack
E-Log	None

Well Casings

Length (ft)	Btm (ft)	Dia (in)	Material
0	21	1.5	Unknown

Well Screens

Length (ft)	Bottom (ft)	Dia (in)	Slot (in)	Material
3	24	2	10	A.B.S.

Pump Test

Draw Down	0	ft
Duration	0	hrs
Pumping Rate	0	igpm
Temperature	0	deg. F
Rec. Pumping Rate	0	igpm

Lithology List

Depth (ft):	Material	Colour	Description
6	Sand	Unknown	Silty
10	Silt	Yellow	Sandy
16	Silt	Unknown	Sandy
20	Silt	Grey	Unknown
25	Till	Grey	Unoxidized

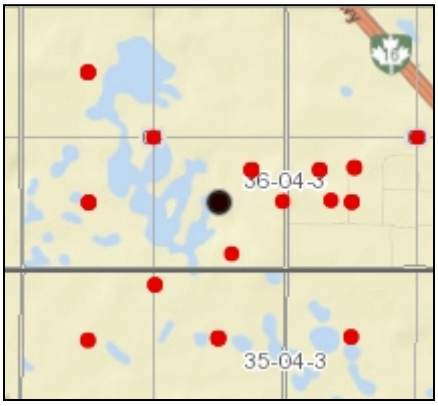

Water Well Driller's Report

5-Jul-2023
WSaskWWDR01
(c) Water Security Agency

Well Name: Saskatchewan Research Council WWDR #: 43772

Well Location

Land Location	16-NE-10-36-04-3	Location of Well (in Quarter)	
LSD	16	ft from N/S Boundary	
Reserve		ft from E/W Boundary	
RM:	344		
NTS Map:	73B01	Major Basin:	
Elevation (ft)	1755	SubBasin:	30
Aquifer			

Well Information

Driller	Hayter Drilling Ltd.
Completion Date	1975.05.17
Hole #	
Install Method	Drilled
Borehole Depth (ft)	360
Bit Dia (in)	0
Water Level	0
Flowing Head	0
Water Use	Research
Well Use	Water Test Hole
Completion Method	
E-Log	Colctd

Well Casings

Length (ft)	Btm (ft)	Dia (in)	Material

Well Screens

Length (ft)	Bottom (ft)	Dia (in)	Slot (in)	Material

Pump Test

Draw Down	0	ft
Duration	0	hrs
Pumping Rate	0	igpm
Temperature	0	deg. F
Rec. Pumping Rate	0	igpm

Lithology List

Depth (ft):	Material	Colour	Description
17	Till	Grey	Calcareous
125	Till	Grey	Calcareous
141	Sand	Grey	Fine-medium
254	Till	Grey	Calcareous
278	Silt	Grey	Noncalcareous
303	Sand	Grey	Fine
306	Sand	Unknown	Cemented
320	Sand	Grey	Fine
360	Silt	Grey	Noncalcareous

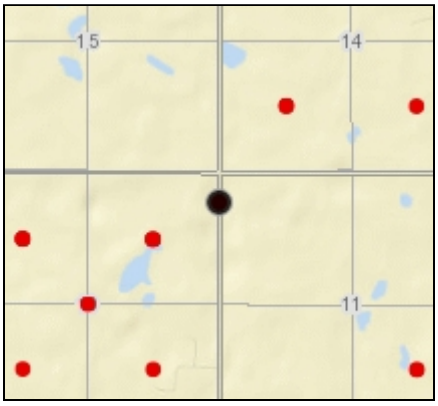

Water Well Driller's Report

5-Jul-2023
WSaskWWDR01
(c) Water Security Agency

Well Name: Saskatchewan Research Council
WWDR #: 45301

Well Location

Land Location	NW-11-35-04-3	Location of Well (in Quarter)	
LSD		ft from N/S Boundary	
Reserve		ft from E/W Boundary	
RM:			
NTS Map:		Major Basin:	
Elevation (ft)	1675	SubBasin:	30
Aquifer			

Well Information

Driller	Hayter Drilling Ltd.
Completion Date	1976.03.14
Hole #	
Install Method	Drilled
Borehole Depth (ft)	260
Bit Dia (in)	0
Water Level	0
Flowing Head	0
Water Use	Research
Well Use	Water Test Hole
Completion Method	
E-Log	Recd

Well Casings

Length (ft)	Btm (ft)	Dia (in)	Material

Well Screens

Length (ft)	Bottom (ft)	Dia (in)	Slot (in)	Material

Pump Test

Draw Down	0	ft
Duration	0	hrs
Pumping Rate	0	igpm
Temperature	0	deg. F
Rec. Pumping Rate	0	igpm

Lithology List

Depth (ft):	Material	Colour	Description
5	Fill	Unknown	Unknown
11	Silt	Unknown	Sandy
37	Sand	Grey	Silty
82	Silt	Grey	Unknown
103	Clay	Grey	Silty
153	Till	Grey	Calcareous
168	Till	Unknown	Oxidized
206	Silty Clay	Grey	Noncalcareous
209	Sand	Unknown	Unknown
210	Sandstone	Unknown	Unknown
232	Sand	Grey	Noncalcareous
244	Silt	Grey	Noncalcareous
260	Clay	Grey	Noncalcareous

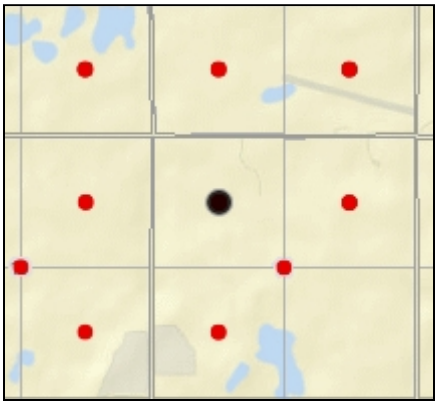

Water Well Driller's Report

5-Jul-2023

WSaskWWDR01

(c) Water Security Agency

Well Name: Saskatchewan Research Council

WWDR #: 45302

Well Location

Land Location	SW-11-35-04-3	Location of Well (in Quarter)	
LSD		ft from N/S Boundary	
Reserve		ft from E/W Boundary	
RM:			
NTS Map:		Major Basin:	
Elevation (ft)	1750	SubBasin:	30
Aquifer			

Well Information

Driller	Hayter Drilling Ltd.
Completion Date	1976.03.14
Hole #	
Install Method	Drilled
Borehole Depth (ft)	360
Bit Dia (in)	0
Water Level	0
Flowing Head	0
Water Use	Research
Well Use	Water Test Hole
Completion Method	
E-Log	Recd

Well Casings

Length (ft)	Btm (ft)	Dia (in)	Material

Well Screens

Length (ft)	Bottom (ft)	Dia (in)	Slot (in)	Material

Pump Test

Draw Down	0	ft
Duration	0	hrs
Pumping Rate	0	igpm
Temperature	0	deg. F
Rec. Pumping Rate	0	igpm

Lithology List

Depth (ft):	Material	Colour	Description
3	Fill	Unknown	Unknown
7	Till	Unknown	Calcareous
34	Gravel	Unknown	Sandy
165	Silty Clay	Grey	Noncalcareous
166	Bentonite	Unknown	Unknown
360	Silty Clay	Grey	Noncalcareous

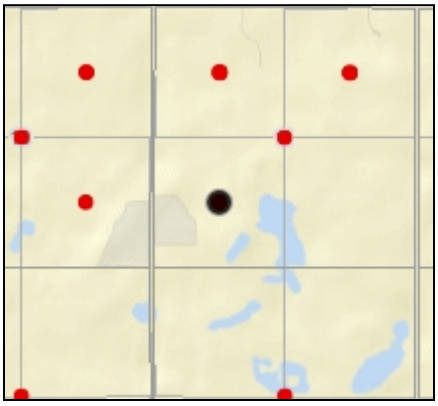

Water Well Driller's Report

5-Jul-2023
WSaskWWDR01
(c) Water Security Agency

Well Name: Saskatchewan Research Council

WWDR #: 45304

Well Location

Land Location	02-SE-04-36-04-3	Location of Well (in Quarter)	
LSD	02	ft from N/S Boundary	
Reserve		ft from E/W Boundary	
RM:	344		
NTS Map:	73B02	Major Basin:	
Elevation (ft)	1669	SubBasin:	30
Aquifer			

Well Information

Driller	Hayter Drilling Ltd.
Completion Date	1976.03.14
Hole #	00000030
Install Method	Drilled
Borehole Depth (ft)	560
Bit Dia (in)	0
Water Level	0
Flowing Head	0
Water Use	Research
Well Use	Water Test Hole
Completion Method	
E-Log	Colctd

Well Casings

Length (ft)	Btm (ft)	Dia (in)	Material

Well Screens

Length (ft)	Bottom (ft)	Dia (in)	Slot (in)	Material

Pump Test

Draw Down	0	ft
Duration	0	hrs
Pumping Rate	0	igpm
Temperature	0	deg. F
Rec. Pumping Rate	0	igpm

Lithology List

Depth (ft):	Material	Colour	Description
9	Silty Clay	Grey	Unknown
22	Silt	Unknown	Calcareous
32	Silt	Grey	Unknown
63	Sand	Grey	Fine
85	Silt	Grey	Clayey
284	Till	Grey	Unknown
383	Till	Grey	Sandy
407	Till	Grey	Silty
478	Silt	Grey	Clayey
510	Sand	Grey	Noncalcareous
560	Silt	Grey	Sandy

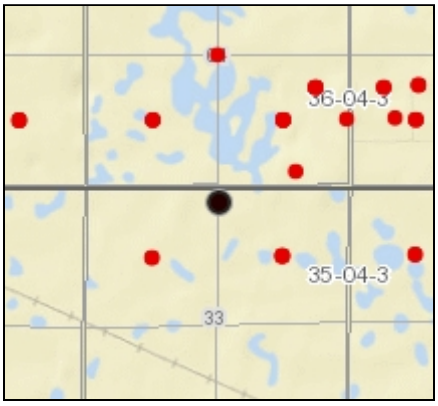

Water Well Driller's Report

5-Jul-2023
WSaskWWDR01
(c) Water Security Agency

Well Name: Saskatchewan Research Council WWDR #: 45653

Well Location

Land Location	SW-11-35-04-3	Location of Well (in Quarter)	
LSD		ft from N/S Boundary	
Reserve		ft from E/W Boundary	
RM:			
NTS Map:		Major Basin:	
Elevation (ft)	1760	SubBasin:	30
Aquifer			

Well Information

Driller	Hayter Drilling Ltd.
Completion Date	1976.03.28
Hole #	001
Install Method	Drilled
Borehole Depth (ft)	440
Bit Dia (in)	0
Water Level	0
Flowing Head	0
Water Use	Research
Well Use	Water Test Hole
Completion Method	
E-Log	Recd

Well Casings

Length (ft)	Btm (ft)	Dia (in)	Material

Well Screens

Length (ft)	Bottom (ft)	Dia (in)	Slot (in)	Material

Pump Test

Draw Down	0	ft
Duration	0	hrs
Pumping Rate	0	igpm
Temperature	0	deg. F
Rec. Pumping Rate	0	igpm

Lithology List

Depth (ft):	Material	Colour	Description
3	Fill	Unknown	Unknown
6	Silt	Grey	Calcareous
34	Gravel	Unknown	Sandy
164	Silty Clay	Grey	Noncalcareous
165	Bentonite	Unknown	Unknown
366	Silty Clay	Grey	Calcareous
396	Sand	Grey	Fine
440	Silt	Grey	Noncalcareous

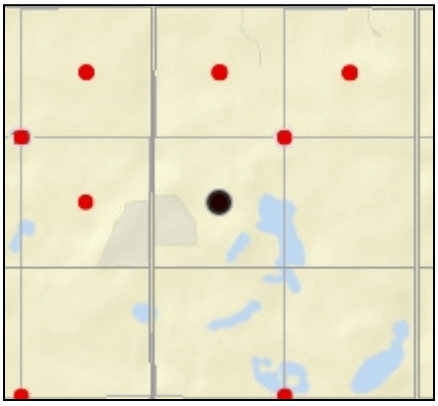

Water Well Driller's Report

5-Jul-2023
WSaskWWDR01
(c) Water Security Agency

Well Name: Saskatchewan Research Council WWDR #: 45654

Well Location

Land Location	NE-27-35-04-3	Location of Well (in Quarter)	
LSD		ft from N/S Boundary	
Reserve		ft from E/W Boundary	
RM:			
NTS Map:		Major Basin:	
Elevation (ft)	1660	SubBasin:	30
Aquifer			

Well Information

Driller	Hayter Drilling Ltd.
Completion Date	1976.03.28
Hole #	002
Install Method	Drilled
Borehole Depth (ft)	640
Bit Dia (in)	0
Water Level	0
Flowing Head	0
Water Use	Research
Well Use	Water Test Hole
Completion Method	
E-Log	Colctd

Well Casings

Length (ft)	Btm (ft)	Dia (in)	Material

Well Screens

Length (ft)	Bottom (ft)	Dia (in)	Slot (in)	Material

Pump Test

Draw Down	0	ft
Duration	0	hrs
Pumping Rate	0	igpm
Temperature	0	deg. F
Rec. Pumping Rate	0	igpm

Lithology List

Depth (ft):	Material	Colour	Description
14	Silt	Grey	Calcareous
22	Sand	Grey	Calcareous
72	Silt	Grey	Clayey
244	Till	Grey	Calcareous
246	Sand	Unknown	Unknown
340	Till	Grey	Calcareous
344	Silt	Grey	Calcareous
346	Sand	Unknown	Unknown
441	Till	Grey	Calcareous
443	Sand	Unknown	Unknown
500	Till	Grey	Calcareous
502	Sand	Unknown	Unknown
506	Till	Grey	Calcareous
569	Silt	Grey	Noncalcareous

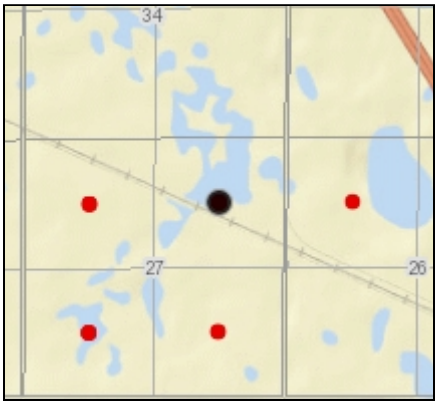

Water Well Driller's Report

5-Jul-2023

WSaskWWDR01

(c) Water Security Agency

578	Sand	Grey	Noncalcareous
588	Silt	Grey	Noncalcareous
600	Sand	Grey	Noncalcareous
640	Silt	Grey	Noncalcareous

Water Well Driller's Report

7-Jun-2023
WSaskWWDR01
(c) Water Security Agency

Well Name: Saskatchewan Research Council WWDR #: 45655

Well Location

Land Location	NE-27-35-04-3	Location of Well (in Quarter)	
LSD		ft from N/S Boundary	
Reserve		ft from E/W Boundary	
RM:			
NTS Map:		Major Basin:	
Elevation (ft)	1660	SubBasin:	30
Aquifer			

Well Information

Driller	Don Macrae Augering
Completion Date	1976.03.23
Hole #	001
Install Method	Augered
Borehole Depth (ft)	35
Bit Dia (in)	0
Water Level	0
Flowing Head	0
Water Use	Research
Well Use	Water Test Hole
Completion Method	
E-Log	Recd

Well Casings

Length (ft)	Btm (ft)	Dia (in)	Material

Well Screens

Length (ft)	Bottom (ft)	Dia (in)	Slot (in)	Material

Pump Test

Draw Down	0	ft
Duration	0	hrs
Pumping Rate	0	igpm
Temperature	0	deg. F
Rec. Pumping Rate	0	igpm

Lithology List

Depth (ft):	Material	Colour	Description
4	Unknown	Unknown	Unknown
33	Silt	Unknown	Unknown
34	Sand	Unknown	Unknown
35	Silt	Unknown	Unknown

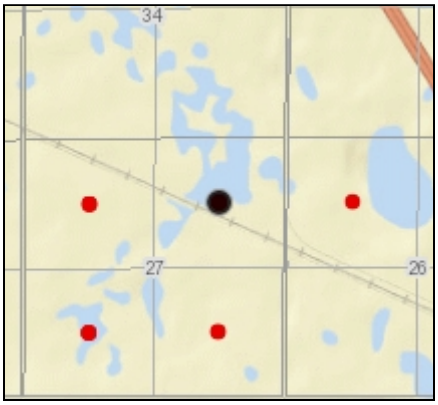

Water Well Driller's Report

5-Jul-2023
WSaskWWDR01
(c) Water Security Agency

Well Name: Saskatchewan Research Council WWDR #: 45656

Well Location

Land Location	NW-34-35-04-3	Location of Well (in Quarter)	
LSD		ft from N/S Boundary	
Reserve		ft from E/W Boundary	
RM:			
NTS Map:		Major Basin:	
Elevation (ft)	1675	SubBasin:	30
Aquifer			

Well Information

Driller	Don Macrae Augering
Completion Date	1976.03.23
Hole #	001
Install Method	Augered
Borehole Depth (ft)	30
Bit Dia (in)	0
Water Level	0
Flowing Head	0
Water Use	Research
Well Use	Water Test Hole
Completion Method	
E-Log	None

Well Casings

Length (ft)	Btm (ft)	Dia (in)	Material

Well Screens

Length (ft)	Bottom (ft)	Dia (in)	Slot (in)	Material

Pump Test

Draw Down	0	ft
Duration	0	hrs
Pumping Rate	0	igpm
Temperature	0	deg. F
Rec. Pumping Rate	0	igpm

Lithology List

Depth (ft):	Material	Colour	Description
5	Unknown	Unknown	Unknown
25	Silt	Unknown	Noncalcareous
29	Sand	Unknown	Fine
30	Silt	Unknown	Calcareous

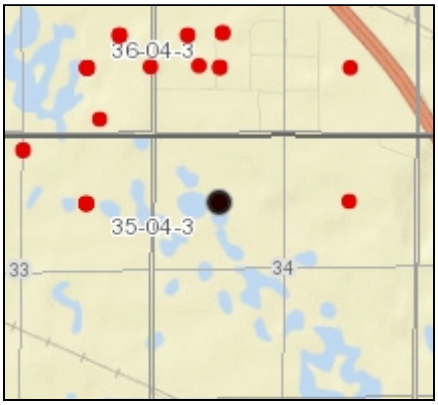

Water Well Driller's Report

5-Jul-2023
WSaskWWDR01
(c) Water Security Agency

Well Name: Saskatchewan Research Council WWDR #: 45657

Well Location

Land Location	NW-34-35-04-3	Location of Well (in Quarter)	
LSD		ft from N/S Boundary	
Reserve		ft from E/W Boundary	
RM:			
NTS Map:		Major Basin:	
Elevation (ft)	1675	SubBasin:	30
Aquifer			

Well Information

Driller	Don Macrae Augering
Completion Date	1976.03.24
Hole #	002
Install Method	Augered
Borehole Depth (ft)	25
Bit Dia (in)	0
Water Level	0
Flowing Head	0
Water Use	Research
Well Use	Water Test Hole
Completion Method	
E-Log	None

Well Casings

Length (ft)	Btm (ft)	Dia (in)	Material

Well Screens

Length (ft)	Bottom (ft)	Dia (in)	Slot (in)	Material

Pump Test

Draw Down	0	ft
Duration	0	hrs
Pumping Rate	0	igpm
Temperature	0	deg. F
Rec. Pumping Rate	0	igpm

Lithology List

Depth (ft):	Material	Colour	Description
4	Topsoil	Unknown	Unknown
15	Silt	Unknown	Noncalcareous
20	Sand	Unknown	Fine
25	Silt	Unknown	Calcareous

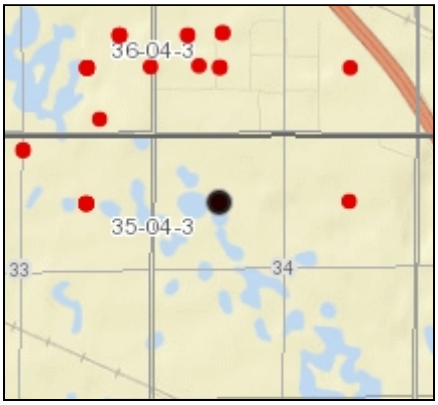

Water Well Driller's Report

14-Jun-2023
WSaskWWDR01
(c) Water Security Agency

Well Name: Saskatchewan Research Council WWDR #: 46738

Well Location

Land Location	SW-03-36-04-3	Location of Well (in Quarter)	
LSD		ft from N/S Boundary	
Reserve		ft from E/W Boundary	
RM:	344		
NTS Map:	73B01	Major Basin:	
Elevation (ft)	1705	SubBasin:	30
Aquifer			

Well Information

Driller	Don Macrae Augering
Completion Date	1976.05.31
Hole #	00000034
Install Method	Drilled
Borehole Depth (ft)	107
Bit Dia (in)	0
Water Level	0
Flowing Head	0
Water Use	Research
Well Use	Observation
Completion Method	Well Screen
E-Log	None

Well Casings

Length (ft)	Btm (ft)	Dia (in)	Material
61	60	1.5	P.V.C.

Well Screens

Length (ft)	Bottom (ft)	Dia (in)	Slot (in)	Material
5	65	2	12	A.B.S.

Pump Test

Draw Down	0	ft
Duration	0	hrs
Pumping Rate	0	igpm
Temperature	0	deg. F
Rec. Pumping Rate	0	igpm

Lithology List

Depth (ft):	Material	Colour	Description
7	Sand	Unknown	Unknown
35	Silt	Unknown	Unknown
57	Till	Unknown	Unoxidized
65	Sand	Unknown	Unknown
105	Till	Unknown	Unoxidized
107	Sand	Unknown	Unknown

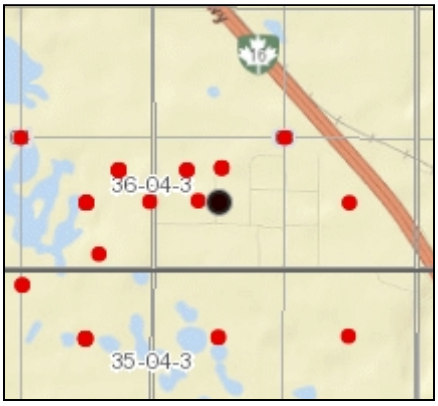

Water Well Driller's Report

14-Jun-2023
WSaskWWDR01
(c) Water Security Agency

Well Name: Saskatchewan Research Council WWDR #: 46739

Well Location

Land Location	SW-03-36-04-3	Location of Well (in Quarter)	
LSD		ft from N/S Boundary	
Reserve		ft from E/W Boundary	
RM:			
NTS Map:		Major Basin:	
Elevation (ft)	1705	SubBasin:	30
Aquifer			

Well Information

Driller	Don Macrae Augering
Completion Date	1976.05.31
Hole #	035
Install Method	Drilled
Borehole Depth (ft)	107
Bit Dia (in)	0
Water Level	0
Flowing Head	0
Water Use	Research
Well Use	Observation
Completion Method	Well Screen
E-Log	None

Well Casings

Length (ft)	Btm (ft)	Dia (in)	Material
104	102	1.5	P.V.C.

Well Screens

Length (ft)	Bottom (ft)	Dia (in)	Slot (in)	Material
4	107	2	10	A.B.S.

Pump Test

Draw Down	0	ft
Duration	0	hrs
Pumping Rate	0	igpm
Temperature	0	deg. F
Rec. Pumping Rate	0	igpm

Lithology List

Depth (ft):	Material	Colour	Description
7	Sand	Unknown	Unknown
35	Silt	Unknown	Unknown
57	Till	Unknown	Unoxidized
65	Sand	Unknown	Unknown
105	Till	Unknown	Unoxidized
107	Sand	Unknown	Unknown

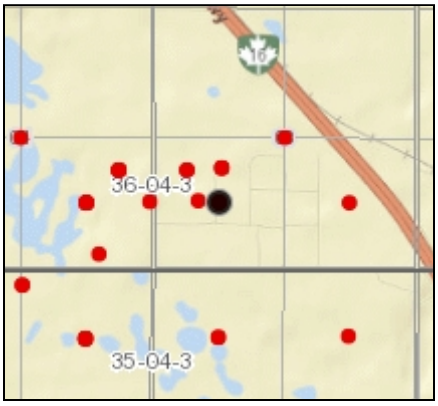

Water Well Driller's Report

5-Jul-2023

WSaskWWDR01

(c) Water Security Agency

Well Name: Saskatchewan Ministry of Highways and In

WWDR #: 116862

Well Location

Land Location	5-SW-03-36-04-3	Location of Well (in Quarter)	
LSD	5	ft from N/S Boundary	
Reserve		ft from E/W Boundary	
RM:	344		
NTS Map:	73B02	Major Basin:	
Elevation (ft)	1696	SubBasin:	30
Aquifer			

Well Information

Driller	Unknown Client 031
Completion Date	1987.07.28
Hole #	112
Install Method	Drilled
Borehole Depth (ft)	118
Bit Dia (in)	4.8
Water Level	0
Flowing Head	0
Water Use	Research
Well Use	Soil Test Hole
Completion Method	
E-Log	Colctd

Well Casings

Length (ft)	Btm (ft)	Dia (in)	Material

Well Screens

Length (ft)	Bottom (ft)	Dia (in)	Slot (in)	Material

Pump Test

Draw Down	0	ft
Duration	0	hrs
Pumping Rate	0	igpm
Temperature	0	deg. F
Rec. Pumping Rate	0	igpm

Lithology List

Depth (ft):	Material	Colour	Description
7	Sand	Grey	Fine
24	Silt	Grey	Calcareous
28	Clay	Brown	Calcareous
34	Silt	Grey	Sandy
56	Till	Grey	Soft
66	Till	Grey	Hard
87	Till	Grey	Sandy
102	Till	Grey	Calcareous
108	Till	Grey	Boulders
118	Sand	Grey	Medium-coarse

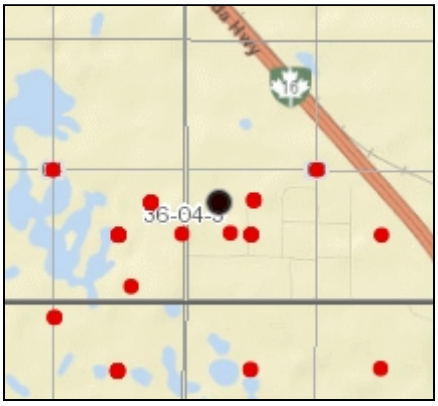

Water Well Driller's Report

5-Jul-2023

WSaskWWDR01

(c) Water Security Agency

Well Name: Saskatchewan Ministry of Highways and In

WWDR #: 116889

Well Location

Land Location	5-SW-13-36-04-3	Location of Well (in Quarter)	
LSD	5	ft from N/S Boundary	
Reserve		ft from E/W Boundary	
RM:	344		
NTS Map:	73B01	Major Basin:	
Elevation (ft)	1781	SubBasin:	30
Aquifer			

Well Information

Driller	Unknown Client 031
Completion Date	1989.07.25
Hole #	140
Install Method	Drilled
Borehole Depth (ft)	358
Bit Dia (in)	4.8
Water Level	0
Flowing Head	0
Water Use	Research
Well Use	Soil Test Hole
Completion Method	
E-Log	Colctd

Well Casings

Length (ft)	Btm (ft)	Dia (in)	Material

Well Screens

Length (ft)	Bottom (ft)	Dia (in)	Slot (in)	Material

Pump Test

Draw Down	0	ft
Duration	0	hrs
Pumping Rate	0	igpm
Temperature	0	deg. F
Rec. Pumping Rate	0	igpm

Lithology List

Depth (ft):	Material	Colour	Description
7	Silt	Grey	Calcareous
11	Sand	Yellow	Silty
17	Till	Grey	Sandy
21	Till	Grey	Sandy
43	Till	Grey	Sandy
62	Till	Grey	Sandy
99	Till	Grey	Calcareous
158	Till	Grey	Calcareous
169	Sand	Grey	Fine-medium
177	Till	Brown	Calcareous
200	Till	Grey	Calcareous
201	Till	Grey	Clayey
213	Till	Grey	Calcareous
259	Till	Grey	Calcareous

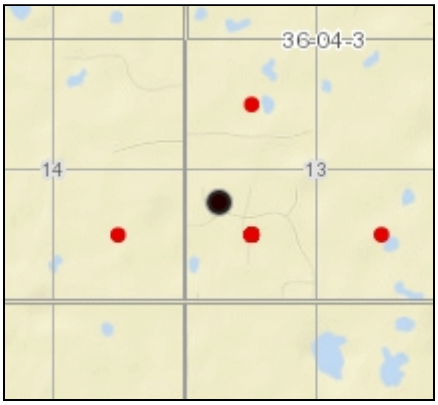

Water Security Agency

Water Well Driller's Report

5-Jul-2023

WSaskWWDR01

(c) Water Security Agency

274	Till	Grey	Calcareous
279	Silt	Grey	Clayey
287	Sand	Grey	Silty
288	Concretion	Unknown	Unknown
290	Sand	Grey	Fine
292	Bentonite	Unknown	Unknown
308	Sand	Grey	Silty
322	Silt	Grey	Sandy
345	Silt	Grey	Clayey
358	Silty Clay	Grey	Noncalcareous

Water Well Driller's Report

5-Jul-2023
WSaskWWDR01
(c) Water Security Agency

Well Name: Saskatchewan Ministry of Highways and In

WWDR #: 116890

Well Location

Land Location	5-SW-03-36-04-3	Location of Well (in Quarter)	
LSD	5	ft from N/S Boundary	
Reserve		ft from E/W Boundary	
RM:	344		
NTS Map:	73B02	Major Basin:	
Elevation (ft)	1690	SubBasin:	30
Aquifer			

Well Information

Driller	Unknown Client 031
Completion Date	1989.07.27
Hole #	141
Install Method	Drilled
Borehole Depth (ft)	397
Bit Dia (in)	4.8
Water Level	0
Flowing Head	0
Water Use	Research
Well Use	Soil Test Hole
Completion Method	
E-Log	Colctd

Well Casings

Length (ft)	Btm (ft)	Dia (in)	Material

Well Screens

Length (ft)	Bottom (ft)	Dia (in)	Slot (in)	Material

Pump Test

Draw Down	0	ft
Duration	0	hrs
Pumping Rate	0	igpm
Temperature	0	deg. F
Rec. Pumping Rate	0	igpm

Lithology List

Depth (ft):	Material	Colour	Description
15	Silt	Brown	Sandy
30	Silt	Grey	Clayey
43	Till	Grey	Silty
69	Till	Grey	Calcareous
115	Till	Grey	Stoney
131	Sand	Grey	Fine-medium
141	Till	Brown	Calcareous
177	Till	Grey	Calcareous
195	Till	Grey	Calcareous
205	Silt	Grey	Sandy
230	Silt	Grey	Clayey
313	Silty Clay	Grey	Noncalcareous
331	Sand	Grey	Silty
332	Bentonite	Unknown	Unknown

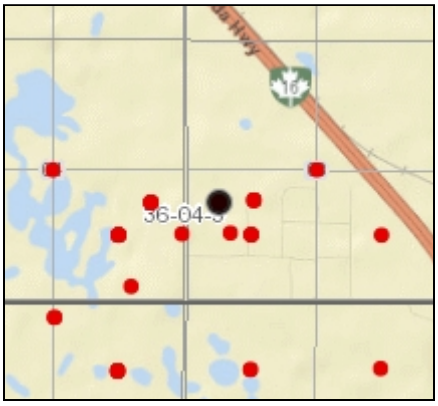

Water Well Driller's Report

5-Jul-2023

WSaskWWDR01

(c) Water Security Agency

348	Sand	Grey	Silty
368	Silt	Grey	Sandy
381	Silt	Grey	Clayey
397	Silty Clay	Grey	Noncalcareous

Water Well Driller's Report

5-Jul-2023
WSaskWWDR01
(c) Water Security Agency

Well Name: Saskatchewan Ministry of Highways and In

WWDR #: 116917

Well Location

Land Location	4-SW-19-35-04-3	Location of Well (in Quarter)	
LSD	4	ft from N/S Boundary	
Reserve		ft from E/W Boundary	
RM:	344		
NTS Map:	73B02	Major Basin:	
Elevation (ft)	1670	SubBasin:	30
Aquifer			

Well Information

Driller	Unknown Client 031
Completion Date	1991.07.03
Hole #	168
Install Method	Drilled
Borehole Depth (ft)	479
Bit Dia (in)	4.8
Water Level	0
Flowing Head	0
Water Use	Research
Well Use	Soil Test Hole
Completion Method	
E-Log	Colctd

Well Casings

Length (ft)	Btm (ft)	Dia (in)	Material

Well Screens

Length (ft)	Bottom (ft)	Dia (in)	Slot (in)	Material

Pump Test

Draw Down	0	ft
Duration	0	hrs
Pumping Rate	0	igpm
Temperature	0	deg. F
Rec. Pumping Rate	0	igpm

Lithology List

Depth (ft):	Material	Colour	Description
3	Sand	Brown	Silty
15	Silty Clay	Grey	Calcareous
50	Clay	Grey	Calcareous
50	Silt	Grey	Sand Streaks
56	Silty Clay	Grey	Calcareous
84	Silt	Grey	Calcareous
84	Clay	Grey	Sand Streaks
92	Clay	Grey	Calcareous
103	Till	Grey	Clay Streaks
298	Till	Grey	Sandy
303	Gravel	Unknown	Unknown
453	Till	Grey	Stoney
479	Silty Clay	Grey	Noncalcareous

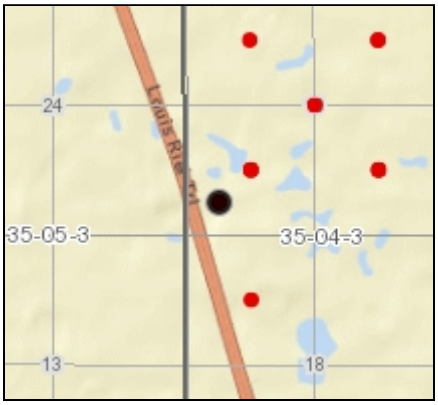

Water Well Driller's Report

5-Jul-2023

WSaskWWDR01

(c) Water Security Agency

Well Name: Saskatchewan Ministry of Highways and In

WWDR #: 116918

Well Location

Land Location	1-SE-03-35-05-3	Location of Well (in Quarter)	
LSD	1	ft from N/S Boundary	
Reserve		ft from E/W Boundary	
RM:	344		
NTS Map:	72O15	Major Basin:	
Elevation (ft)	1673	SubBasin:	30
Aquifer			

Well Information

Driller	Unknown Client 031
Completion Date	1991.07.09
Hole #	169
Install Method	Drilled
Borehole Depth (ft)	597
Bit Dia (in)	4.8
Water Level	0
Flowing Head	0
Water Use	Research
Well Use	Soil Test Hole
Completion Method	
E-Log	Colctd

Well Casings

Length (ft)	Btm (ft)	Dia (in)	Material

Well Screens

Length (ft)	Bottom (ft)	Dia (in)	Slot (in)	Material

Pump Test

Draw Down	0	ft
Duration	0	hrs
Pumping Rate	0	igpm
Temperature	0	deg. F
Rec. Pumping Rate	0	igpm

Lithology List

Depth (ft):	Material	Colour	Description
27	Sand	Brown	Fine
40	Silty Clay	Grey	Calcareous
44	Sand	Grey	Fine
48	Silt	Grey	Sandy
58	Sand	Grey	Fine
81	Silt	Grey	Sandy
98	Silt	Grey	Calcareous
110	Sand	Grey	Fine
118	Silt	Grey	Calcareous
124	Sand	Grey	Silty
149	Silt	Grey	Sandy
154	Silt	Grey	Clayey
158	Silt	Grey	Calcareous
183	Silty Clay	Grey	Calcareous

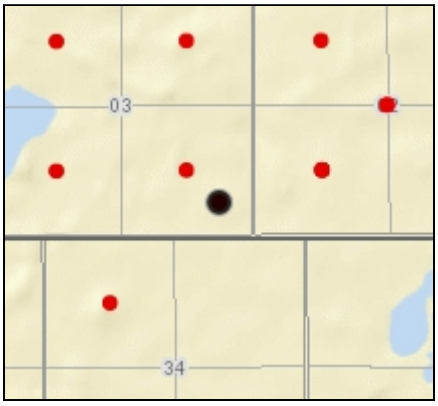

Water Well Driller's Report

5-Jul-2023

WSaskWWDR01

(c) Water Security Agency

190	Silt	Grey	Clayey
200	Silty Clay	Grey	Calcareous
206	Till	Grey	Stoney
210	Gravel	Grey	Medium-coarse
229	Till	Grey	Stoney
236	Sand	Grey	Medium-coarse
253	Till	Grey	Stoney
256	Gravel	Unknown	Unknown
284	Till	Grey	Sandy
326	Till	Grey	Sand Streaks
330	Sand	Grey	Medium-coarse
459	Till	Grey	Stoney
474	Sand	Grey	Medium-coarse
484	Till	Grey	Stoney
597	Silty Clay	Grey	Noncalcareous

Water Well Driller's Report

5-Jul-2023
WSaskWWDR01
(c) Water Security Agency

Well Name: Saskatchewan Ministry of Highways and In

WWDR #: 116929

Well Location

Land Location	16-NE-32-35-05-3	Location of Well (in Quarter)	
LSD	16	ft from N/S Boundary	
Reserve		ft from E/W Boundary	
RM:	344		
NTS Map:	73B02	Major Basin:	
Elevation (ft)	1673	SubBasin:	30
Aquifer			

Well Information

Driller	Unknown Client 031
Completion Date	1995.07.27
Hole #	180
Install Method	Drilled
Borehole Depth (ft)	450
Bit Dia (in)	4.8
Water Level	0
Flowing Head	0
Water Use	Research
Well Use	Soil Test Hole
Completion Method	
E-Log	Colctd

Well Casings

Length (ft)	Btm (ft)	Dia (in)	Material

Well Screens

Length (ft)	Bottom (ft)	Dia (in)	Slot (in)	Material

Pump Test

Draw Down	0	ft
Duration	0	hrs
Pumping Rate	0	igpm
Temperature	0	deg. F
Rec. Pumping Rate	0	igpm

Lithology List

Depth (ft):	Material	Colour	Description
30	Sand	Grey	Fine
30	Silt	Unknown	Clay Streaks
41	Silt	Grey	Clayey
49	Sand	Grey	Fine
56	Silt	Grey	Calcareous
62	Sand	Grey	Fine
79	Silty Clay	Grey	Calcareous
104	Sand	Grey	Fine
114	Sand	Grey	Fine
123	Silty Clay	Grey	Calcareous
131	Silt	Grey	Clayey
138	Silty Clay	Grey	Calcareous
162	Till	Grey	Sandy
162	Sand	Unknown	Gravel Streaks

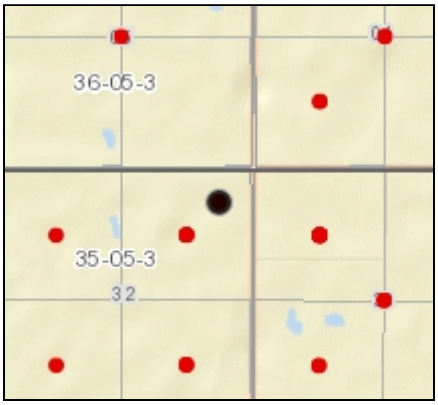

Water Well Driller's Report

5-Jul-2023

WSaskWWDR01

(c) Water Security Agency

194	Till	Grey	Sand Streaks
235	Till	Grey	Soft
241	Sand	Grey	Coarse
277	Till	Grey	Soft
281	Gravel	Unknown	Fine
324	Till	Grey	Calcareous
342	Till	Grey	Firm
377	Till	Grey	Stoney
405	Till	Grey	Firm
410	Sand	Grey	Medium-coarse
426	Till	Grey	Firm
432	Till	Grey	Stoney
434	Shale	Unknown	Unknown
438	Sand	Grey	Silty
439	Sandstone	Unknown	Unknown
446	Sand	Grey	Silty
450	Shale	Unknown	Unknown

Water Well Driller's Report

5-Jul-2023
WSaskWWDR01
(c) Water Security Agency

Well Name: Saskatchewan Research Council WWDR #: 120923

Well Location

Land Location	01-SE-04-36-04-3	Location of Well (in Quarter)	
LSD	01	ft from N/S Boundary	
Reserve		ft from E/W Boundary	
RM:	344		
NTS Map:	73B02	Major Basin:	
Elevation (ft)	1677	SubBasin:	30
Aquifer			

Well Information

Driller	Hayter Drilling Ltd.
Completion Date	1974.05.25
Hole #	
Install Method	Drilled
Borehole Depth (ft)	100
Bit Dia (in)	0
Water Level	0
Flowing Head	0
Water Use	Research
Well Use	Water Test Hole
Completion Method	
E-Log	Recd

Well Casings

Length (ft)	Btm (ft)	Dia (in)	Material

Well Screens

Length (ft)	Bottom (ft)	Dia (in)	Slot (in)	Material

Pump Test

Draw Down	0	ft
Duration	0	hrs
Pumping Rate	0	igpm
Temperature	0	deg. F
Rec. Pumping Rate	0	igpm

Lithology List

Depth (ft):	Material	Colour	Description
4	Sand	Grey	Silty
8	Silt	Grey	Calcareous
14	Sand	Brown	Fine
17	Silt	Grey	Calcareous
25	Sand	Grey	Fine
32	Sand	Grey	Fine
47	Sand	Grey	Fine
60	Sand	Grey	Silty
83	Silt	Grey	Calcareous
100	Till	Grey	Calcareous

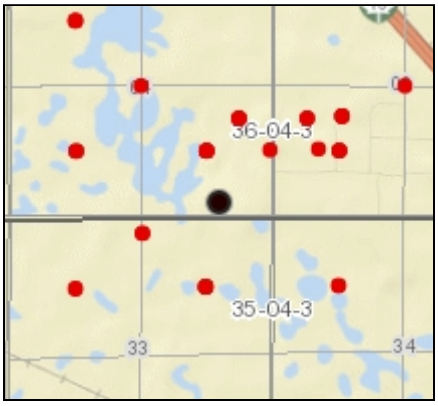

Water Well Driller's Report

14-Jun-2023
WSaskWWDR01
(c) Water Security Agency

Well Name: Saskatchewan Research Council WWDR #: 210584

Well Location

Land Location	05-SW-03-36-04-3	Location of Well (in Quarter)	
LSD	05	ft from N/S Boundary	
Reserve		ft from E/W Boundary	
RM:	344		
NTS Map:	73B01	Major Basin:	
Elevation (ft)	1693	SubBasin:	30
Aquifer			

Well Information

Driller	Don Macrae Augering
Completion Date	1976.05.31
Hole #	00000031
Install Method	Drilled
Borehole Depth (ft)	112
Bit Dia (in)	0
Water Level	18
Flowing Head	0
Water Use	Research
Well Use	Observation
Completion Method	Well Screen
E-Log	Recd

Well Casings

Length (ft)	Btm (ft)	Dia (in)	Material
54	53	2	P.V.C.

Well Screens

Length (ft)	Bottom (ft)	Dia (in)	Slot (in)	Material
4	57	2	10	A.B.S.

Pump Test

Draw Down	0	ft
Duration	0	hrs
Pumping Rate	0	igpm
Temperature	0	deg. F
Rec. Pumping Rate	0	igpm

Lithology List

Depth (ft):	Material	Colour	Description
112	Unknown	Unknown	Unknown

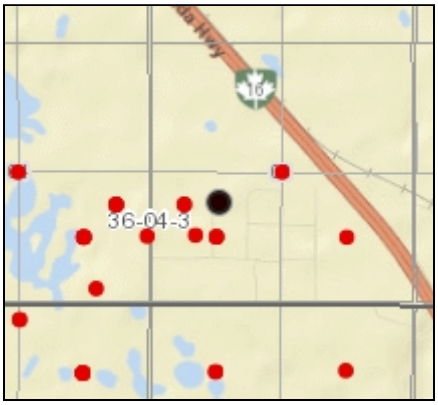

Water Well Driller's Report

5-Jul-2023
WSaskWWDR01
(c) Water Security Agency

Well Name: Saskatchewan Research Council WWDR #: 210585

Well Location

Land Location	05-SW-03-36-04-3	Location of Well (in Quarter)	
LSD	05	ft from N/S Boundary	
Reserve		ft from E/W Boundary	
RM:	344		
NTS Map:	73B01	Major Basin:	
Elevation (ft)	1693	SubBasin:	30
Aquifer			

Well Information

Driller	Don Macrae Augering
Completion Date	1976.05.31
Hole #	00000002
Install Method	Drilled
Borehole Depth (ft)	112
Bit Dia (in)	0
Water Level	18
Flowing Head	0
Water Use	Research
Well Use	Observation
Completion Method	Well Screen
E-Log	Recd

Well Casings

Length (ft)	Btm (ft)	Dia (in)	Material
103	102	2	P.V.C.

Well Screens

Length (ft)	Bottom (ft)	Dia (in)	Slot (in)	Material
3	105	2	13	A.B.S.

Pump Test

Draw Down	0	ft
Duration	0	hrs
Pumping Rate	0	igpm
Temperature	0	deg. F
Rec. Pumping Rate	0	igpm

Lithology List

Depth (ft):	Material	Colour	Description
112	Unknown	Unknown	Unknown

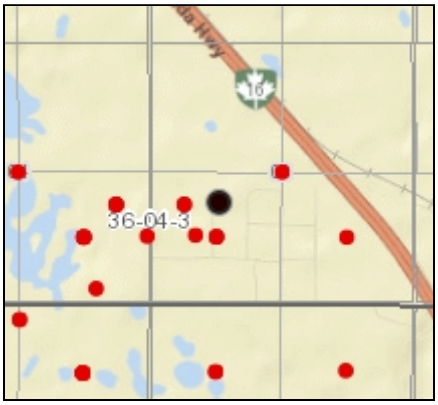

Water Well Driller's Report

5-Jul-2023
WSaskWWDR01
(c) Water Security Agency

Well Name: Grasswood WWDR #: 210619

Well Location

Land Location	16-NE-18-35-05-3	Location of Well (in Quarter)	
LSD	16	ft from N/S Boundary	
Reserve		ft from E/W Boundary	
RM:	344		
NTS Map:	73B02	Major Basin:	
Elevation (ft)	1624	SubBasin:	30
Aquifer			

Well Information

Driller	Hayter Drilling Ltd.
Completion Date	1974.01.01
Hole #	
Install Method	Drilled
Borehole Depth (ft)	740
Bit Dia (in)	0
Water Level	0
Flowing Head	0
Water Use	Research
Well Use	Water Test Hole
Completion Method	
E-Log	Recd

Well Casings

Length (ft)	Btm (ft)	Dia (in)	Material

Well Screens

Length (ft)	Bottom (ft)	Dia (in)	Slot (in)	Material

Pump Test

Draw Down	0	ft
Duration	0	hrs
Pumping Rate	0	igpm
Temperature	0	deg. F
Rec. Pumping Rate	0	igpm

Lithology List

Depth (ft):	Material	Colour	Description
18	Sand	Brown	Fine
39	Silt	Grey	Calcareous
59	Sand	Grey	Silty
78	Silt	Grey	Calcareous
83	Sand	Grey	Fine
99	Silt	Grey	Calcareous
108	Till	Grey	Soft
134	Till	Grey	Hard
197	Till	Grey	Calcareous
210	Till	Grey	Calcareous
236	Till	Grey	Clayey
300	Till	Grey	Calcareous
307	Sand	Grey	Fine-medium
357	Till	Grey	Calcareous

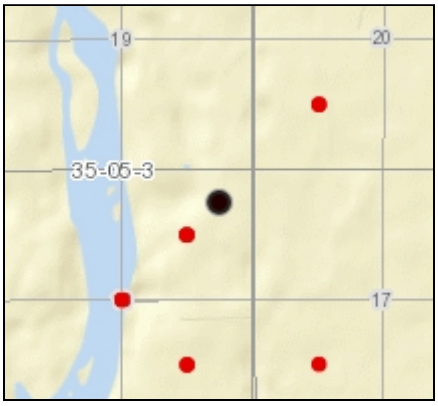

Water Well Driller's Report

5-Jul-2023

WSaskWWDR01

(c) Water Security Agency

367	Till	Grey	Calcareous
425	Till	Grey	Calcareous
426	Bedrock	Unknown	Unknown
444	Silt	Grey	Noncalcareous
474	Silt	Grey	Fine
698	Silt	Grey	Noncalcareous
712	Sand	Grey	Fine-medium
740	Silt	Grey	Clayey

Water Well Driller's Report

5-Jul-2023
WSaskWWDR01
(c) Water Security Agency

Well Name: University of Saskatchewan WWDR #: 210620

Well Location

Land Location	14-NW-30-35-05-3	Location of Well (in Quarter)	
LSD	14	ft from N/S Boundary	
Reserve		ft from E/W Boundary	
RM:	344		
NTS Map:	73B02	Major Basin:	
Elevation (ft)	1639	SubBasin:	30
Aquifer			

Well Information

Driller	Hayter Drilling Ltd.
Completion Date	1974.01.01
Hole #	
Install Method	Drilled
Borehole Depth (ft)	480
Bit Dia (in)	0
Water Level	0
Flowing Head	0
Water Use	Research
Well Use	Water Test Hole
Completion Method	
E-Log	Recd

Well Casings

Length (ft)	Btm (ft)	Dia (in)	Material

Well Screens

Length (ft)	Bottom (ft)	Dia (in)	Slot (in)	Material

Pump Test

Draw Down	0	ft
Duration	0	hrs
Pumping Rate	0	igpm
Temperature	0	deg. F
Rec. Pumping Rate	0	igpm

Lithology List

Depth (ft):	Material	Colour	Description
11	Sand	Grey	Fine-medium
18	Silt	Olive	Sandy
25	Silt	Grey	Calcareous
33	Sand	Grey	Fine
71	Silt	Grey	Calcareous
82	Till	Grey	Soft
102	Till	Grey	Hard
104	Sand	Grey	Fine
116	Till	Grey	Hard
117	Sand	Unknown	Unknown
131	Till	Grey	Calcareous
133	Sand	Grey	Fine-course
218	Till	Grey	Calcareous
221	Sand	Grey	Silty

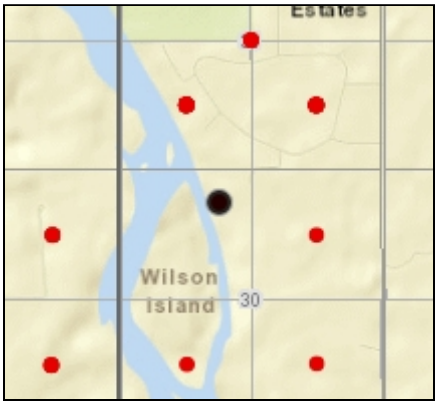

Water Well Driller's Report

5-Jul-2023

WSaskWWDR01

(c) Water Security Agency

260	Till	Grey	Calcareous
261	Bedrock	Unknown	Unknown
280	Silt	Grey	Noncalcareous
288	Clay	Grey	Silt
306	Silt	Grey	Clayey
318	Clay	Grey	Noncalcareous
341	Silt	Grey	Noncalcareous
362	Sand	Grey	Fine
380	Silt	Grey	Noncalcareous
390	Silt	Grey	Calcareous
405	Sand	Grey	Silty
409	Sand	Grey	Fine
436	Silt	Grey	Noncalcareous
440	Sand	Grey	Silty
480	Sand	Grey	Silt

Water Well Driller's Report

5-Jul-2023
WSaskWWDR01
(c) Water Security Agency

Well Name: University of Saskatchewan WWDR #: 210622

Well Location

Land Location	8-SE-18-36-05-3	Location of Well (in Quarter)	
LSD	8	ft from N/S Boundary	
Reserve		ft from E/W Boundary	
RM:	344		
NTS Map:	73B02	Major Basin:	
Elevation (ft)	1627	SubBasin:	30
Aquifer			

Well Information

Driller	Hayter Drilling Ltd.
Completion Date	1974.01.01
Hole #	
Install Method	Drilled
Borehole Depth (ft)	400
Bit Dia (in)	0
Water Level	0
Flowing Head	0
Water Use	Research
Well Use	Water Test Hole
Completion Method	
E-Log	Recd

Well Casings

Length (ft)	Btm (ft)	Dia (in)	Material

Well Screens

Length (ft)	Bottom (ft)	Dia (in)	Slot (in)	Material

Pump Test

Draw Down	0	ft
Duration	0	hrs
Pumping Rate	0	igpm
Temperature	0	deg. F
Rec. Pumping Rate	0	igpm

Lithology List

Depth (ft):	Material	Colour	Description
18	Silt	Grey	Calcareous
46	Sand	Grey	Silty
57	Till	Unknown	Silty
64	Till	Grey	Hard
66	Sand	Grey	Fine-medium
69	Till	Grey	Hard
71	Sand	Grey	Fine-medium
75	Till	Grey	Hard
77	Sand	Grey	Medium-coarse
226	Till	Grey	Calcareous
229	Sand	Grey	Silty
233	Sand	Grey	Silt
284	Till	Grey	Sand Streaks
292	Silt	Unknown	Sandy

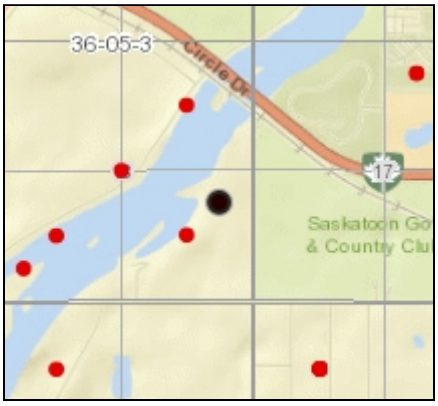

Water Well Driller's Report

5-Jul-2023

WSaskWWDR01

(c) Water Security Agency

304	Sand	Unknown	Fine-medium
338	Sand	Grey	Fine
400	Silt	Grey	Noncalcareous
400	Sand	Unknown	Silty

Water Well Driller's Report

14-Jun-2023
WSaskWWDR01
(c) Water Security Agency

Well Name: Goodale Farm

WWDR #: 211197

Well Location

Land Location	08-SE-04-36-04-3
LSD	08
Reserve	
RM:	344
NTS Map:	73B02
Elevation (ft)	1686
Aquifer	

Location of Well (in Quarter)

ft from N/S Boundary

ft from E/W Boundary

Major Basin:

SubBasin: 30

Well Information

Driller	Elk Point Drilling Corp.
Completion Date	1984.10.10
Hole #	0084-301
Install Method	Drilled
Borehole Depth (ft)	320
Bit Dia (in)	0
Water Level	0
Flowing Head	999
Water Use	Research
Well Use	Observation
Completion Method	Well Screen And Gravel Pack
E-Log	Recd

Well Casings

Length (ft)	Btm (ft)	Dia (in)	Material
0	0	2	P.V.C.

Well Screens

Length (ft)	Bottom (ft)	Dia (in)	Slot (in)	Material
0	304	2	0	P.V.C.

Pump Test

Draw Down	0	ft
Duration	0	hrs
Pumping Rate	0	igpm
Temperature	0	deg. F
Rec. Pumping Rate	0	igpm

Lithology List

Depth (ft):	Material	Colour	Description
20	Silt	Brown	Calcareous
40	Till	Grey	Silt
80	Till	Grey	Soft
114	Till	Unknown	Sandy
126	Sand	Grey	Medium
139	Till	Grey	Calcareous
180	Till	Grey	Calcareous
200	Till	Grey	Calcareous
208	Silt	Grey	Clayey
222	Till	Grey	Calcareous
230	Silt	Grey	Noncalcareous
292	Silty Clay	Grey	Noncalcareous
300	Silt	Grey	Sandy
320	Sand	Grey	Silty

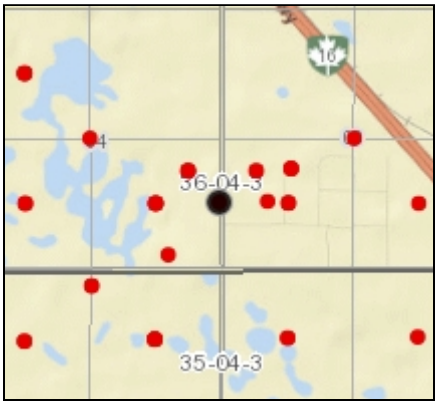

Water Well Driller's Report

14-Jun-2023
WSaskWWDR01
(c) Water Security Agency

Well Name: Goodale Farm

WWDR #: 211198

Well Location

Land Location	8-SE-04-36-04-3	Location of Well (in Quarter)	
LSD	8	ft from N/S Boundary	
Reserve		ft from E/W Boundary	
RM:	344		
NTS Map:	73B02	Major Basin:	
Elevation (ft)	1686	SubBasin:	30
Aquifer			

Well Information

Driller	Elk Point Drilling Corp.
Completion Date	1984.01.01
Hole #	084-301A
Install Method	Drilled
Borehole Depth (ft)	125
Bit Dia (in)	0
Water Level	0
Flowing Head	999
Water Use	Research
Well Use	Observation
Completion Method	Unknown
E-Log	Recd

Well Casings

Length (ft)	Btm (ft)	Dia (in)	Material
0	112	5	P.V.C.

Well Screens

Length (ft)	Bottom (ft)	Dia (in)	Slot (in)	Material
0	124	0	0	Unknown

Pump Test

Draw Down	0	ft
Duration	0	hrs
Pumping Rate	0	igpm
Temperature	0	deg. F
Rec. Pumping Rate	0	igpm

Lithology List

Depth (ft):	Material	Colour	Description
24	Silt	Unknown	Unknown
58	Till	Grey	Soft
94	Till	Grey	Sandy
111	Till	Grey	Stoney
125	Sand	Grey	Medium

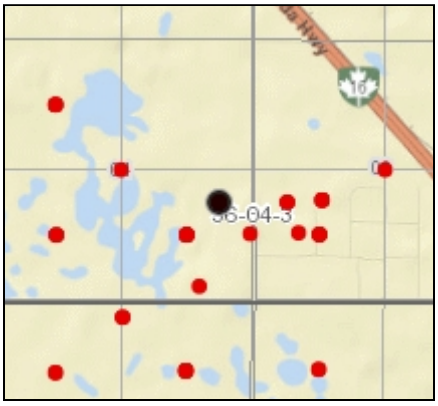

Water Well Driller's Report

5-Jul-2023
WSaskWWDR01
(c) Water Security Agency

Well Name: Goodale Farm WWDR #: 211199

Well Location

Land Location	8-SE-04-36-04-3	Location of Well (in Quarter)	
LSD	8	ft from N/S Boundary	
Reserve		ft from E/W Boundary	
RM:	344		
NTS Map:	73B02	Major Basin:	
Elevation (ft)	1670	SubBasin:	30
Aquifer			

Well Information

Driller	Hayter Drilling Ltd.
Completion Date	1974.01.01
Hole #	00000006
Install Method	Drilled
Borehole Depth (ft)	500
Bit Dia (in)	0
Water Level	0
Flowing Head	0
Water Use	Research
Well Use	Water Test Hole
Completion Method	
E-Log	Recd

Well Casings

Length (ft)	Btm (ft)	Dia (in)	Material

Well Screens

Length (ft)	Bottom (ft)	Dia (in)	Slot (in)	Material

Pump Test

Draw Down	0	ft
Duration	0	hrs
Pumping Rate	0	igpm
Temperature	0	deg. F
Rec. Pumping Rate	0	igpm

Lithology List

Depth (ft):	Material	Colour	Description
11	Sand	Brown	Fine
28	Sand	Grey	Silty
38	Sand	Grey	Fine
71	Sand	Grey	Silty
168	Till	Unknown	Rocky
171	Till	Unknown	Calcareous
316	Till	Grey	Calcareous
320	Sand	Grey	Medium-coarse
326	Gravel	Unknown	Unknown
330	Till	Unknown	Unknown
338	Silt	Grey	Noncalcareous
346	Sand	Grey	Silty
368	Silt	Grey	Noncalcareous
460	Silt	Grey	Clayey

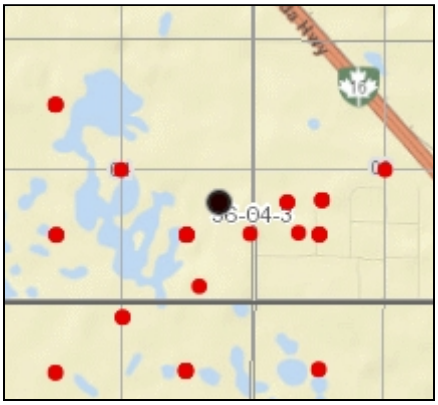

Water Well Driller's Report

5-Jul-2023

WSaskWWDR01

(c) Water Security Agency

470	Sand	Grey	Silty
478	Concretion	Unknown	Silty
491	Sand	Unknown	Fine
500	Silt	Grey	Sandy

Water Well Driller's Report

5-Jul-2023
WSaskWWDR01
(c) Water Security Agency

Well Name: Goodale Farm WWDR #: 211200

Well Location

Land Location	8-SE-04-36-04-3	Location of Well (in Quarter)	
LSD	8	ft from N/S Boundary	
Reserve		ft from E/W Boundary	
RM:	344		
NTS Map:	73B02	Major Basin:	
Elevation (ft)	1674	SubBasin:	30
Aquifer			

Well Information

Driller	Hayter Drilling Ltd.
Completion Date	1974.01.01
Hole #	00000005
Install Method	Drilled
Borehole Depth (ft)	460
Bit Dia (in)	0
Water Level	0
Flowing Head	0
Water Use	Research
Well Use	Water Test Hole
Completion Method	
E-Log	Recd

Well Casings

Length (ft)	Btm (ft)	Dia (in)	Material

Well Screens

Length (ft)	Bottom (ft)	Dia (in)	Slot (in)	Material

Pump Test

Draw Down	0	ft
Duration	0	hrs
Pumping Rate	0	igpm
Temperature	0	deg. F
Rec. Pumping Rate	0	igpm

Lithology List

Depth (ft):	Material	Colour	Description
8	Sand	Grey	Fine
21	Sand	Unknown	Silty
31	Silt	Grey	Sandy
33	Sand	Grey	Silty
57	Silt	Grey	Pebbly
91	Till	Grey	Soft
99	Till	Grey	Calcareous
100	Rock	Unknown	Unknown
103	Till	Grey	Calcareous
170	Till	Grey	Calcareous
171	Rock	Unknown	Unknown
177	Till	Grey	Calcareous
186	Clay	Grey	Calcareous
211	Till	Grey	Calcareous

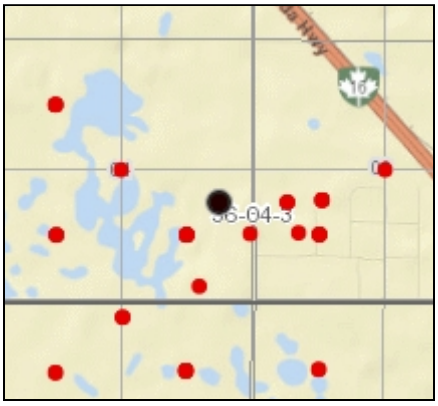

Water Security Agency

Water Well Driller's Report

5-Jul-2023

WSaskWWDR01

(c) Water Security Agency

252	Till	Grey	Calcareous
253	Bedrock	Unknown	Unknown
259	Silt	Grey	Noncalcareous
261	Bentonite	Grey	Unknown
278	Unknown	Unknown	Unknown
281	Unknown	Unknown	Unknown
290	Sand	Grey	Fine
324	Silt	Grey	Noncalcareous
325	Sand	Grey	Fine
403	Silt	Grey	Clayey
410	Silt	Grey	Sandy
412	Concretion	Unknown	Unknown
420	Sand	Grey	Fine
426	Sand	Grey	Silty
429	Bentonite	Grey	Unknown
460	Sand	Grey	Silty

Water Well Driller's Report

5-Jul-2023
WSaskWWDR01
(c) Water Security Agency

Well Name: Goodale Farm WWDR #: 212258

Well Location

Land Location	8-SE-04-36-04-3	Location of Well (in Quarter)	
LSD	8	ft from N/S Boundary	
Reserve		ft from E/W Boundary	
RM:	344		
NTS Map:	73B02	Major Basin:	
Elevation (ft)	1686	SubBasin:	30
Aquifer			

Well Information

Driller	Hayter Drilling Ltd.
Completion Date	1974.01.01
Hole #	00000004
Install Method	Drilled
Borehole Depth (ft)	324
Bit Dia (in)	0
Water Level	0
Flowing Head	0
Water Use	Research
Well Use	Water Test Hole
Completion Method	
E-Log	Recd

Well Casings

Length (ft)	Btm (ft)	Dia (in)	Material

Well Screens

Length (ft)	Bottom (ft)	Dia (in)	Slot (in)	Material

Pump Test

Draw Down	0	ft
Duration	0	hrs
Pumping Rate	0	igpm
Temperature	0	deg. F
Rec. Pumping Rate	0	igpm

Lithology List

Depth (ft):	Material	Colour	Description
5	Unknown	Unknown	Unknown
28	Silt	Grey	Clayey
61	Till	Grey	Silty
118	Till	Grey	Calcareous
124	Sand	Brown	Fine-medium
135	Sand	Grey	Medium-coarse
145	Till	Grey	Calcareous
182	Till	Grey	Calcareous
202	Till	Grey	Calcareous
203	Bedrock	Unknown	Unknown
308	Unknown	Unknown	Unknown
324	Sand	Grey	Fine

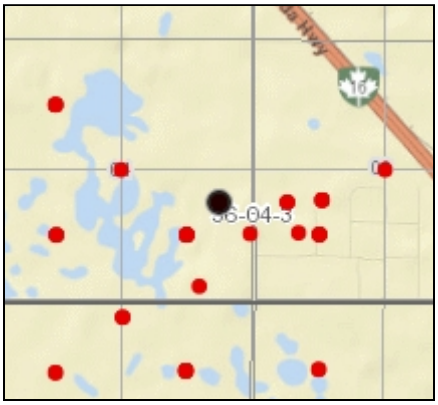

Water Well Driller's Report

5-Jul-2023

WSaskWWDR01

(c) Water Security Agency

Well Name: Saskatchewan Research Council

WWDR #: 219310

Well Location

Land Location	NE-22-35-04-3	Location of Well (in Quarter)	
LSD		ft from N/S Boundary	
Reserve		ft from E/W Boundary	
RM:	344		
NTS Map:	73B01	Major Basin:	
Elevation (ft)	1663	SubBasin:	30
Aquifer			

Well Information

Driller	Unknown Client 031
Completion Date	1968.10.13
Hole #	
Install Method	Augered
Borehole Depth (ft)	70
Bit Dia (in)	0
Water Level	0
Flowing Head	0
Water Use	Research
Well Use	Soil Test Hole
Completion Method	
E-Log	None

Well Casings

Length (ft)	Btm (ft)	Dia (in)	Material

Well Screens

Length (ft)	Bottom (ft)	Dia (in)	Slot (in)	Material

Pump Test

Draw Down	0	ft
Duration	0	hrs
Pumping Rate	0	igpm
Temperature	0	deg. F
Rec. Pumping Rate	0	igpm

Lithology List

Depth (ft):	Material	Colour	Description

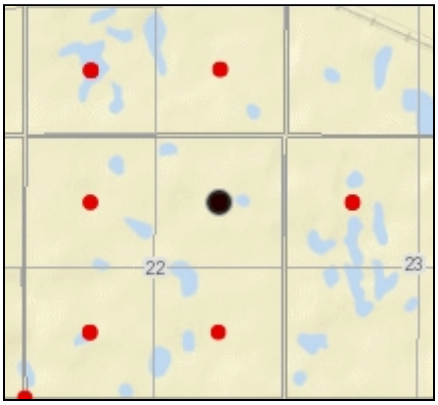

Water Well Driller's Report

5-Jul-2023

WSaskWWDR01

(c) Water Security Agency

Well Name: Saskatchewan Research Council

WWDR #: 219311

Well Location

Land Location	SE-25-35-04-3	Location of Well (in Quarter)	
LSD		ft from N/S Boundary	
Reserve		ft from E/W Boundary	
RM:	344		
NTS Map:	73B01	Major Basin:	
Elevation (ft)	1680	SubBasin:	30
Aquifer			

Well Information

Driller	Unknown Client 031
Completion Date	1964.10.13
Hole #	
Install Method	Augered
Borehole Depth (ft)	70
Bit Dia (in)	0
Water Level	0
Flowing Head	0
Water Use	Research
Well Use	Soil Test Hole
Completion Method	
E-Log	None

Well Casings

Length (ft)	Btm (ft)	Dia (in)	Material

Well Screens

Length (ft)	Bottom (ft)	Dia (in)	Slot (in)	Material

Pump Test

Draw Down	0	ft
Duration	0	hrs
Pumping Rate	0	igpm
Temperature	0	deg. F
Rec. Pumping Rate	0	igpm

Lithology List

Depth (ft):	Material	Colour	Description

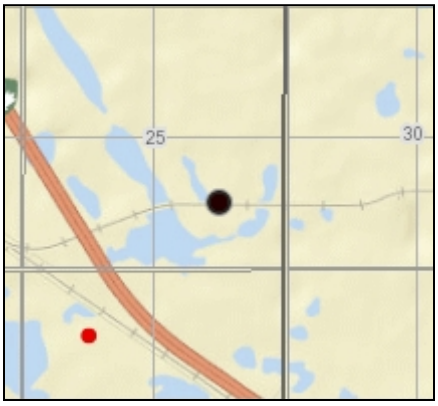

Water Well Driller's Report

5-Jul-2023
WSaskWWDR01
(c) Water Security Agency

Well Name: Unknown Client 031 WWDR #: 219553

Well Location

Land Location	4-SW-19-35-04-3	Location of Well (in Quarter)	
LSD	4	ft from N/S Boundary	
Reserve		ft from E/W Boundary	
RM:	344		
NTS Map:	73B02	Major Basin:	
Elevation (ft)	1653	SubBasin:	30
Aquifer			

Well Information

Driller	Unknown Client 031
Completion Date	
Hole #	
Install Method	
Borehole Depth (ft)	479
Bit Dia (in)	0
Water Level	0
Flowing Head	0
Water Use	
Well Use	
Completion Method	
E-Log	None

Well Casings

Length (ft)	Btm (ft)	Dia (in)	Material

Well Screens

Length (ft)	Bottom (ft)	Dia (in)	Slot (in)	Material

Pump Test

Draw Down	0	ft
Duration	0	hrs
Pumping Rate	0	igpm
Temperature	0	deg. F
Rec. Pumping Rate	0	igpm

Lithology List

Depth (ft):	Material	Colour	Description

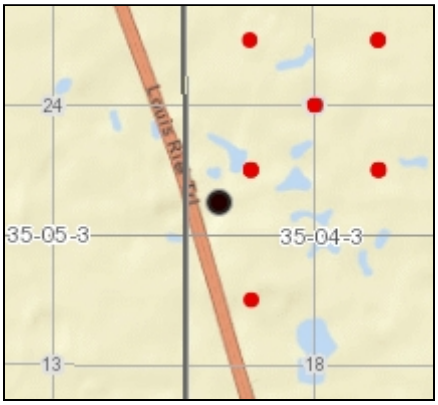

Water Well Driller's Report

5-Jul-2023

WSaskWWDR01

(c) Water Security Agency

Well Name: Unknown Client 031 WWDR #: 219555

Well Location

Land Location	4-SW-26-35-05-3	Location of Well (in Quarter)	
LSD	4	ft from N/S Boundary	
Reserve		ft from E/W Boundary	
RM:	344		
NTS Map:	73B02	Major Basin:	
Elevation (ft)	1666	SubBasin:	30
Aquifer			

Well Information

Driller	Unknown Client 031
Completion Date	
Hole #	
Install Method	
Borehole Depth (ft)	470
Bit Dia (in)	0
Water Level	0
Flowing Head	0
Water Use	
Well Use	
Completion Method	
E-Log	None

Well Casings

Length (ft)	Btm (ft)	Dia (in)	Material

Well Screens

Length (ft)	Bottom (ft)	Dia (in)	Slot (in)	Material

Pump Test

Draw Down	0	ft
Duration	0	hrs
Pumping Rate	0	igpm
Temperature	0	deg. F
Rec. Pumping Rate	0	igpm

Lithology List

Depth (ft):	Material	Colour	Description

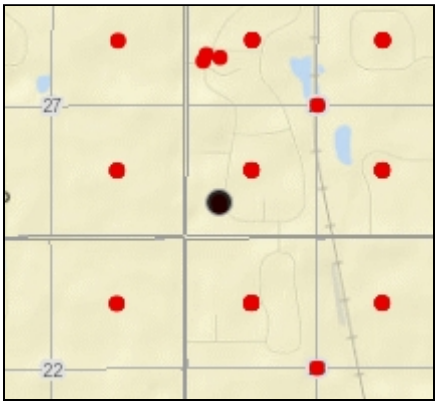

Water Well Driller's Report

5-Jul-2023

WSaskWWDR01

(c) Water Security Agency

Well Name: Saskatchewan Research Council

WWDR #: 220030

Well Location

Land Location	SW-08-36-05-3	Location of Well (in Quarter)	
LSD		ft from N/S Boundary	
Reserve		ft from E/W Boundary	
RM:	344		
NTS Map:	73B02	Major Basin:	
Elevation (ft)	1653	SubBasin:	30
Aquifer			

Well Information

Driller	Unknown Client 031
Completion Date	1967.10.31
Hole #	
Install Method	Augered
Borehole Depth (ft)	75
Bit Dia (in)	0
Water Level	0
Flowing Head	0
Water Use	Research
Well Use	Soil Test Hole
Completion Method	
E-Log	None

Well Casings

Length (ft)	Btm (ft)	Dia (in)	Material

Well Screens

Length (ft)	Bottom (ft)	Dia (in)	Slot (in)	Material

Pump Test

Draw Down	0	ft
Duration	0	hrs
Pumping Rate	0	igpm
Temperature	0	deg. F
Rec. Pumping Rate	0	igpm

Lithology List

Depth (ft):	Material	Colour	Description

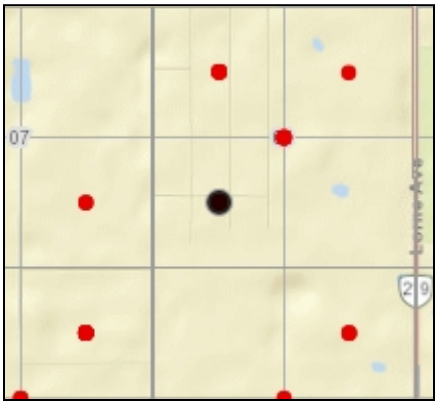

Water Well Driller's Report

5-Jul-2023

WSaskWWDR01

(c) Water Security Agency

Well Name: Saskatchewan Research Council

WWDR #: 220186

Well Location

Land Location	NE-33-35-04-3	Location of Well (in Quarter)	
LSD		ft from N/S Boundary	
Reserve		ft from E/W Boundary	
RM:	344		
NTS Map:	73B02	Major Basin:	
Elevation (ft)	1660	SubBasin:	30
Aquifer			

Well Information

Driller	Unknown Client 031
Completion Date	1976.12.31
Hole #	
Install Method	Augered
Borehole Depth (ft)	50
Bit Dia (in)	0
Water Level	0
Flowing Head	0
Water Use	Research
Well Use	Soil Test Hole
Completion Method	
E-Log	None

Well Casings

Length (ft)	Btm (ft)	Dia (in)	Material

Well Screens

Length (ft)	Bottom (ft)	Dia (in)	Slot (in)	Material

Pump Test

Draw Down	0	ft
Duration	0	hrs
Pumping Rate	0	igpm
Temperature	0	deg. F
Rec. Pumping Rate	0	igpm

Lithology List

Depth (ft):	Material	Colour	Description

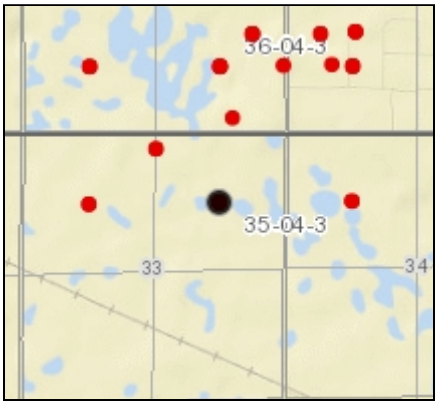

Water Well Driller's Report

5-Jul-2023
WSaskWWDR01
(c) Water Security Agency

Well Name: Unknown Client 031 WWDR #: 220240

Well Location

Land Location	4-SW-02-36-04-3	Location of Well (in Quarter)	
LSD	4	ft from N/S Boundary	
Reserve		ft from E/W Boundary	
RM:	344		
NTS Map:	73B01	Major Basin:	
Elevation (ft)	1712	SubBasin:	30
Aquifer			

Well Information

Driller	Unknown Client 031
Completion Date	
Hole #	00000001
Install Method	
Borehole Depth (ft)	3206
Bit Dia (in)	0
Water Level	0
Flowing Head	0
Water Use	
Well Use	
Completion Method	
E-Log	None

Well Casings

Length (ft)	Btm (ft)	Dia (in)	Material

Well Screens

Length (ft)	Bottom (ft)	Dia (in)	Slot (in)	Material

Pump Test

Draw Down	0	ft
Duration	0	hrs
Pumping Rate	0	igpm
Temperature	0	deg. F
Rec. Pumping Rate	0	igpm

Lithology List

Depth (ft):	Material	Colour	Description

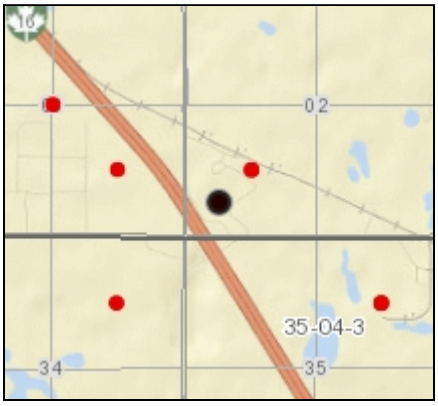

Water Well Driller's Report

5-Jul-2023
WSaskWWDR01
(c) Water Security Agency

Well Name: Unknown Client 031 WWDR #: 220259

Well Location

Land Location	1-SE-07-35-05-3	Location of Well (in Quarter)	
LSD	1	ft from N/S Boundary	
Reserve		ft from E/W Boundary	
RM:	344		
NTS Map:	72O15	Major Basin:	
Elevation (ft)	1607	SubBasin:	30
Aquifer			

Well Information

Driller	Unknown Client 031
Completion Date	
Hole #	00000001
Install Method	
Borehole Depth (ft)	3078
Bit Dia (in)	0
Water Level	0
Flowing Head	0
Water Use	
Well Use	
Completion Method	
E-Log	None

Well Casings

Length (ft)	Btm (ft)	Dia (in)	Material

Well Screens

Length (ft)	Bottom (ft)	Dia (in)	Slot (in)	Material

Pump Test

Draw Down	0	ft
Duration	0	hrs
Pumping Rate	0	igpm
Temperature	0	deg. F
Rec. Pumping Rate	0	igpm

Lithology List

Depth (ft):	Material	Colour	Description

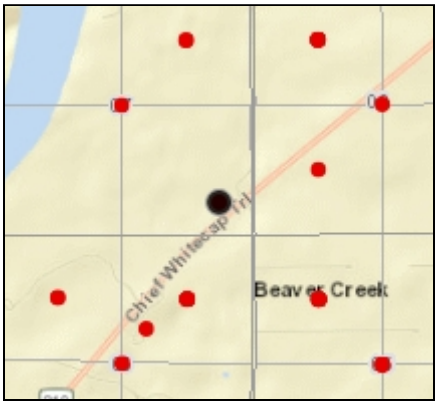

Water Well Driller's Report

5-Jul-2023

WSaskWWDR01

(c) Water Security Agency

Well Name: Midas Oils

WWDR #: 220557

Well Location

Land Location	SW-14-36-04-3	Location of Well (in Quarter)	
LSD		ft from N/S Boundary	
Reserve		ft from E/W Boundary	
RM:	344		
NTS Map:	73B01	Major Basin:	
Elevation (ft)	1765	SubBasin:	30
Aquifer			

Well Information

Driller	Unknown Client 031
Completion Date	1952.07.19
Hole #	
Install Method	
Borehole Depth (ft)	970
Bit Dia (in)	0
Water Level	0
Flowing Head	0
Water Use	
Well Use	
Completion Method	
E-Log	None

Well Casings

Length (ft)	Btm (ft)	Dia (in)	Material

Well Screens

Length (ft)	Bottom (ft)	Dia (in)	Slot (in)	Material

Pump Test

Draw Down	0	ft
Duration	0	hrs
Pumping Rate	0	igpm
Temperature	0	deg. F
Rec. Pumping Rate	0	igpm

Lithology List

Depth (ft):	Material	Colour	Description

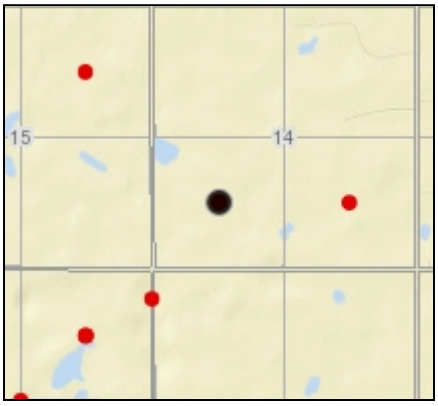

Water Well Driller's Report

5-Jul-2023

WSaskWWDR01

(c) Water Security Agency

Well Name: Goodale Farm

WWDR #: 220559

Well Location

Land Location	SW-04-36-04-3	Location of Well (in Quarter)	
LSD		ft from N/S Boundary	
Reserve		ft from E/W Boundary	
RM:	344		
NTS Map:	73B02	Major Basin:	
Elevation (ft)	1653	SubBasin:	30
Aquifer			

Well Information

Driller	Unknown Client 031
Completion Date	1974.12.31
Hole #	
Install Method	
Borehole Depth (ft)	100
Bit Dia (in)	0
Water Level	0
Flowing Head	0
Water Use	
Well Use	
Completion Method	
E-Log	None

Well Casings

Length (ft)	Btm (ft)	Dia (in)	Material

Well Screens

Length (ft)	Bottom (ft)	Dia (in)	Slot (in)	Material

Pump Test

Draw Down	0	ft
Duration	0	hrs
Pumping Rate	0	igpm
Temperature	0	deg. F
Rec. Pumping Rate	0	igpm

Lithology List

Depth (ft):	Material	Colour	Description

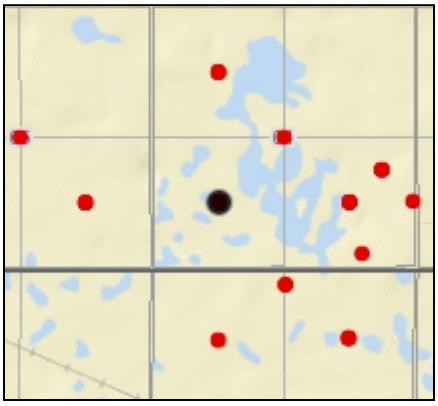

Water Well Driller's Report

5-Jul-2023

WSaskWWDR01

(c) Water Security Agency

Well Name: Rajakumar

WWDR #: 221666

Well Location

Land Location	NW-04-36-04-3	Location of Well (in Quarter)	
LSD		ft from N/S Boundary	
Reserve		ft from E/W Boundary	
RM:	344		
NTS Map:	73B02	Major Basin:	
Elevation (ft)	1666	SubBasin:	30
Aquifer			

Well Information

Driller	Hayter Drilling Ltd.
Completion Date	2012.09.05
Hole #	00000002
Install Method	Drilled
Borehole Depth (ft)	100
Bit Dia (in)	6.8
Water Level	0
Flowing Head	0
Water Use	
Well Use	
Completion Method	
E-Log	Recd

Well Casings

Length (ft)	Btm (ft)	Dia (in)	Material

Well Screens

Length (ft)	Bottom (ft)	Dia (in)	Slot (in)	Material

Pump Test

Draw Down	0	ft
Duration	0	hrs
Pumping Rate	0	igpm
Temperature	0	deg. F
Rec. Pumping Rate	0	igpm

Lithology List

Depth (ft):	Material	Colour	Description
100	Till	Unknown	Unknown

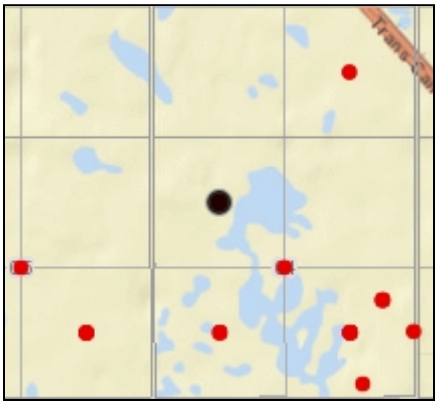

Water Well Driller's Report

14-Jun-2023
WSaskWWDR01
(c) Water Security Agency

Well Name: ISL Engineering and Land Services Ltd. WWDR #: 225555

Well Location

Land Location	SE-33-35-05-3	Location of Well (in Quarter)	
LSD		ft from N/S Boundary	
Reserve		ft from E/W Boundary	
RM:	344		
NTS Map:	73B02	Major Basin:	
Elevation (ft)	1673	SubBasin:	30
Aquifer			

Well Information

Driller	Mobile Augers & Research Ltd.
Completion Date	2017.02.10
Hole #	0000MW01
Install Method	Augered
Borehole Depth (ft)	17
Bit Dia (in)	6
Water Level	0
Flowing Head	0
Water Use	Research
Well Use	Water Test Hole
Completion Method	Well Screen And Gravel Pack
E-Log	None

Well Casings

Length (ft)	Btm (ft)	Dia (in)	Material
17	17	2	P.V.C.

Well Screens

Length (ft)	Bottom (ft)	Dia (in)	Slot (in)	Material
10	17	2	10	P.V.C.

Pump Test

Draw Down	0	ft
Duration	0	hrs
Pumping Rate	0	igpm
Temperature	0	deg. F
Rec. Pumping Rate	0	igpm

Lithology List

Depth (ft):	Material	Colour	Description
3	Till	Unknown	Unknown
5	Silty Clay	Unknown	Unknown
8	Silty Clay	Unknown	Unknown
17	Sand	Unknown	Unknown

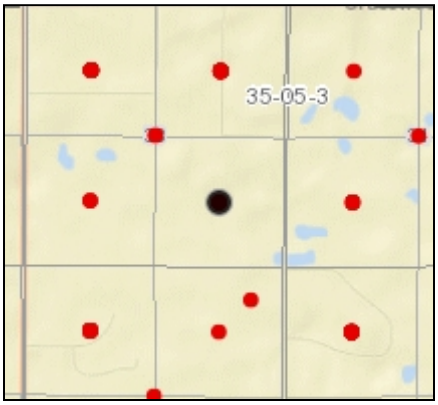

Water Well Driller's Report

5-Jul-2023
WSaskWWDR01
(c) Water Security Agency

Well Name: Saskatchewan Research Council WWDR #: 231504

Well Location

Land Location	02-SE-04-36-04-3	Location of Well (in Quarter)	
LSD	02	ft from N/S Boundary	
Reserve		ft from E/W Boundary	
RM:	344		
NTS Map:	73B02	Major Basin:	
Elevation (ft)	1669	SubBasin:	30
Aquifer			

Well Information

Driller	Hayter Drilling Ltd.
Completion Date	1976.01.01
Hole #	
Install Method	
Borehole Depth (ft)	525
Bit Dia (in)	0
Water Level	0
Flowing Head	0
Water Use	
Well Use	
Completion Method	
E-Log	None

Well Casings

Length (ft)	Btm (ft)	Dia (in)	Material

Well Screens

Length (ft)	Bottom (ft)	Dia (in)	Slot (in)	Material

Pump Test

Draw Down	0	ft
Duration	0	hrs
Pumping Rate	0	igpm
Temperature	0	deg. F
Rec. Pumping Rate	0	igpm

Lithology List

Depth (ft):	Material	Colour	Description
10	Clay	Olive	Silty
22	Silt	Olive	Calcareous
32	Silt	Grey	Calcareous
64	Sand	Grey	Fine
85	Silt	Grey	Clayey
178	Till	Grey	Calcareous
284	Till	Grey	Calcareous
383	Till	Grey	Sandy
408	Till	Grey	Calcareous
478	Silt	Grey	Clayey
494	Sand	Grey	Fine
510	Silt	Grey	Sandy
525	Silt	Unknown	Sandy

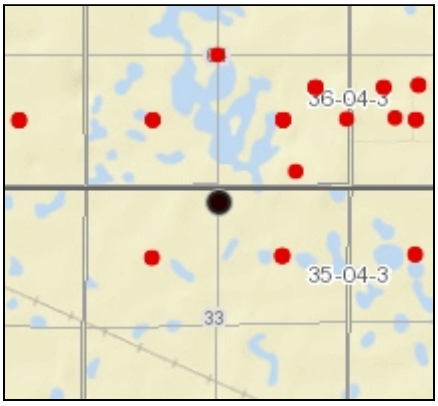

Water Well Driller's Report

5-Jul-2023

WSaskWWDR01

(c) Water Security Agency

Well Name: Saskatchewan Research Council

WWDR #: 231717

Well Location

Land Location	11-NW-06-35-05-3	Location of Well (in Quarter)	
LSD	11	ft from N/S Boundary	
Reserve		ft from E/W Boundary	
RM:	344		
NTS Map:	72O15	Major Basin:	
Elevation (ft)	1626	SubBasin:	30
Aquifer			

Well Information

Driller	Saskatchewan Ministry of Highways and In
Completion Date	1989.09.21
Hole #	00000103
Install Method	
Borehole Depth (ft)	380
Bit Dia (in)	4.8
Water Level	0
Flowing Head	0
Water Use	
Well Use	
Completion Method	
E-Log	None

Well Casings

Length (ft)	Btm (ft)	Dia (in)	Material

Well Screens

Length (ft)	Bottom (ft)	Dia (in)	Slot (in)	Material

Pump Test

Draw Down	0	ft
Duration	0	hrs
Pumping Rate	0	igpm
Temperature	0	deg. F
Rec. Pumping Rate	0	igpm

Lithology List

Depth (ft):	Material	Colour	Description
16	Sand	Grey	Fine-medium
24	Silt	Brown	Sandy
30	Silt	Grey	Calcareous
105	Silt	Grey	Calcareous
123	Till	Grey	Sandy
157	Till	Grey	Stoney
174	Till	Grey	Stoney
184	Sand	Grey	Fine-medium
240	Till	Grey	Stoney
253	Till	Brown	Stoney
286	Till	Grey	Calcareous
290	Sand	Grey	Medium-coarse
338	Till	Grey	Calcareous
358	Sand	Grey	Silty

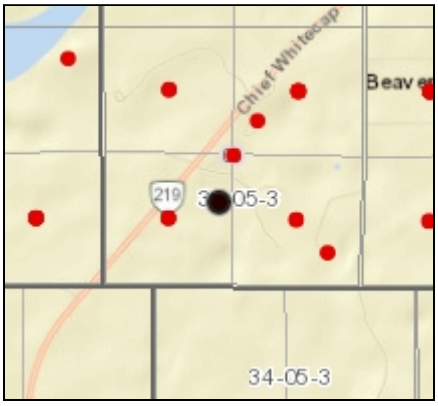

Water Well Driller's Report

5-Jul-2023

WSaskWWDR01

(c) Water Security Agency

363	Silt	Grey	Sandy
367	Clay	Grey	Silty
380	Silt	Grey	Sandy

Water Well Driller's Report

5-Jul-2023

WSaskWWDR01

(c) Water Security Agency

Well Name: Saskatchewan Research Council

WWDR #: 231718

Well Location

Land Location	15-NE-06-35-05-3	Location of Well (in Quarter)	
LSD	15	ft from N/S Boundary	
Reserve		ft from E/W Boundary	
RM:	344		
NTS Map:	72O15	Major Basin:	
Elevation (ft)	1611	SubBasin:	30
Aquifer			

Well Information

Driller	Saskatchewan Ministry of Highways and In
Completion Date	1989.06.27
Hole #	00000102
Install Method	
Borehole Depth (ft)	360
Bit Dia (in)	4.8
Water Level	0
Flowing Head	0
Water Use	
Well Use	
Completion Method	
E-Log	None

Well Casings

Length (ft)	Btm (ft)	Dia (in)	Material

Well Screens

Length (ft)	Bottom (ft)	Dia (in)	Slot (in)	Material

Pump Test

Draw Down	0	ft
Duration	0	hrs
Pumping Rate	0	igpm
Temperature	0	deg. F
Rec. Pumping Rate	0	igpm

Lithology List

Depth (ft):	Material	Colour	Description
26	Sand	Brown	Medium
39	Sand	Grey	Fine
46	Silt	Grey	Sandy
59	Silt	Grey	Calcareous
74	Sand	Grey	Fine
83	Silt	Grey	Calcareous
102	Clay	Grey	Silty
115	Till	Grey	Sandy
138	Till	Grey	Sandy
142	Till	Grey	Stoney
154	Till	Grey	Sandy
157	Sand	Grey	Medium-coarse
203	Till	Grey	Sandy
324	Till	Grey	Calcareous

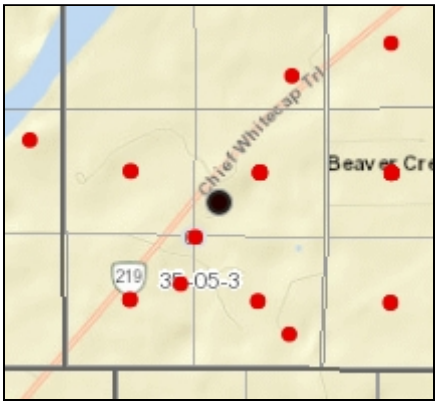

Water Well Driller's Report

(c) Water Security Agency

328	Till	Grey	Calcareous
349	Sand	Grey	Silty
360	Silt	Grey	Sandy

Water Well Driller's Report

5-Jul-2023
WSaskWWDR01
(c) Water Security Agency

Well Name: Kenmore Land Co. WWDR #: 234001

Well Location

Land Location	SE-29-35-05-3	Location of Well (in Quarter)	
LSD		ft from N/S Boundary	
Reserve		ft from E/W Boundary	
RM:	344		
NTS Map:	73B02	Major Basin:	
Elevation (ft)	1646	SubBasin:	30
Aquifer			

Well Information

Driller	Wellen Boring Ltd.
Completion Date	2014.07.24
Hole #	00000004
Install Method	Augered
Borehole Depth (ft)	55
Bit Dia (in)	6
Water Level	15
Flowing Head	0
Water Use	
Well Use	Water Test Hole
Completion Method	
E-Log	None

Well Casings

Length (ft)	Btm (ft)	Dia (in)	Material

Well Screens

Length (ft)	Bottom (ft)	Dia (in)	Slot (in)	Material

Pump Test

Draw Down	0	ft
Duration	0	hrs
Pumping Rate	0	igpm
Temperature	0	deg. F
Rec. Pumping Rate	0	igpm

Lithology List

Depth (ft):	Material	Colour	Description
24	Sand	Brown	Fine
55	Sand	Grey	Fine

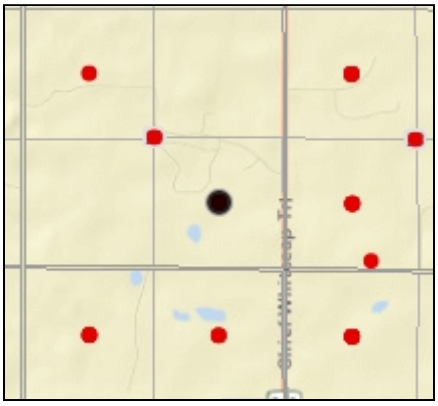

Water Well Driller's Report

5-Jul-2023
WSaskWWDR01
(c) Water Security Agency

Well Name: Kulvacki

WWDR #: 234029

Well Location

Land Location	SW-28-35-04-3	Location of Well (in Quarter)	
LSD		ft from N/S Boundary	
Reserve		ft from E/W Boundary	
RM:	344		
NTS Map:	73B02	Major Basin:	
Elevation (ft)	1663	SubBasin:	30
Aquifer			

Well Information

Driller	Wellen Boring Ltd.
Completion Date	2014.05.12
Hole #	00000003
Install Method	Augered
Borehole Depth (ft)	70
Bit Dia (in)	6
Water Level	0
Flowing Head	0
Water Use	
Well Use	Water Test Hole
Completion Method	
E-Log	None

Well Casings

Length (ft)	Btm (ft)	Dia (in)	Material

Well Screens

Length (ft)	Bottom (ft)	Dia (in)	Slot (in)	Material

Pump Test

Draw Down	0	ft
Duration	0	hrs
Pumping Rate	0	igpm
Temperature	0	deg. F
Rec. Pumping Rate	0	igpm

Lithology List

Depth (ft):	Material	Colour	Description
18	Sand	Brown	Fine
60	Clay	Grey	Firm
70	Clay	Grey	Silty

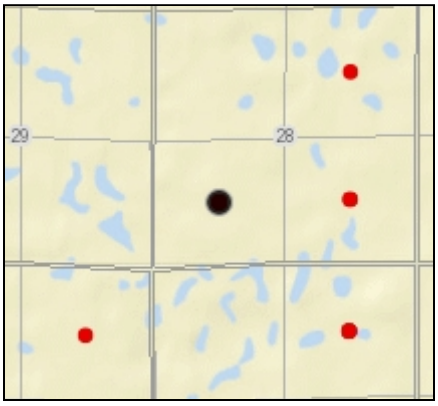

Water Well Driller's Report

5-Jul-2023
WSaskWWDR01
(c) Water Security Agency

Well Name: Kulvacki

WWDR #: 234030

Well Location

Land Location	SW-28-35-04-3	Location of Well (in Quarter)	
LSD		ft from N/S Boundary	
Reserve		ft from E/W Boundary	
RM:	344		
NTS Map:	73B02	Major Basin:	
Elevation (ft)	1663	SubBasin:	30
Aquifer			

Well Information

Driller	Wellen Boring Ltd.
Completion Date	2014.05.12
Hole #	00000004
Install Method	
Borehole Depth (ft)	70
Bit Dia (in)	6
Water Level	0
Flowing Head	0
Water Use	
Well Use	Water Test Hole
Completion Method	
E-Log	None

Well Casings

Length (ft)	Btm (ft)	Dia (in)	Material

Well Screens

Length (ft)	Bottom (ft)	Dia (in)	Slot (in)	Material

Pump Test

Draw Down	0	ft
Duration	0	hrs
Pumping Rate	0	igpm
Temperature	0	deg. F
Rec. Pumping Rate	0	igpm

Lithology List

Depth (ft):	Material	Colour	Description
12	Sand	Brown	Fine
22	Clay	Brown	Unknown
40	Clay	Grey	Unknown
55	Sand	Unknown	Fine
70	Clay	Grey	Silty

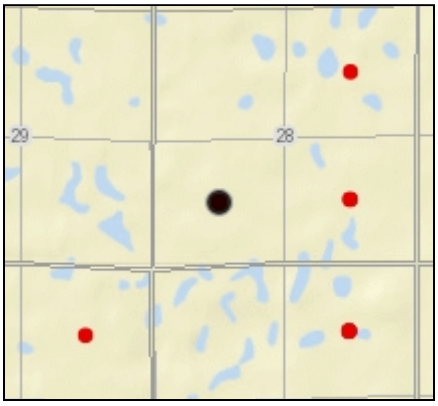

Water Well Driller's Report

5-Jul-2023
WSaskWWDR01
(c) Water Security Agency

Well Name: Kulvacki

WWDR #: 234031

Well Location

Land Location	SW-28-35-04-3	Location of Well (in Quarter)	
LSD		ft from N/S Boundary	
Reserve		ft from E/W Boundary	
RM:	344		
NTS Map:	73B02	Major Basin:	
Elevation (ft)	1663	SubBasin:	30
Aquifer			

Well Information

Driller	Wellen Boring Ltd.
Completion Date	2014.05.12
Hole #	00000005
Install Method	Augered
Borehole Depth (ft)	75
Bit Dia (in)	6
Water Level	50
Flowing Head	0
Water Use	
Well Use	Water Test Hole
Completion Method	
E-Log	None

Well Casings

Length (ft)	Btm (ft)	Dia (in)	Material

Well Screens

Length (ft)	Bottom (ft)	Dia (in)	Slot (in)	Material

Pump Test

Draw Down	0	ft
Duration	0	hrs
Pumping Rate	0	igpm
Temperature	0	deg. F
Rec. Pumping Rate	0	igpm

Lithology List

Depth (ft):	Material	Colour	Description
11	Sand	Brown	Fine
16	Clay	Brown	Unknown
70	Clay	Grey	Firm
85	Sand	Grey	Fine

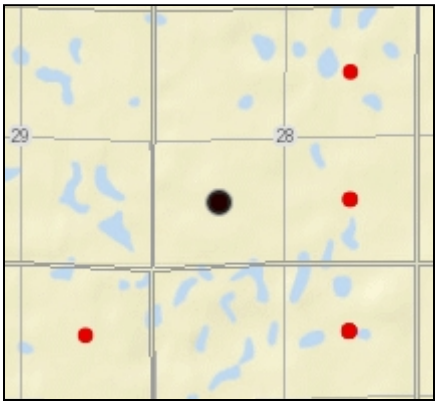

Water Well Driller's Report

5-Jul-2023

WSaskWWDR01

(c) Water Security Agency

Well Name: Kenmore Land Co. WWDR #: 234048

Well Location

Land Location	SE-29-35-05-3	Location of Well (in Quarter)	
LSD		ft from N/S Boundary	
Reserve		ft from E/W Boundary	
RM:	344		
NTS Map:	73B02	Major Basin:	
Elevation (ft)	1646	SubBasin:	30
Aquifer			

Well Information

Driller	Wellen Boring Ltd.
Completion Date	2014.07.24
Hole #	00000001
Install Method	Augered
Borehole Depth (ft)	60
Bit Dia (in)	5
Water Level	12
Flowing Head	0
Water Use	
Well Use	Water Test Hole
Completion Method	
E-Log	None

Well Casings

Length (ft)	Btm (ft)	Dia (in)	Material

Well Screens

Length (ft)	Bottom (ft)	Dia (in)	Slot (in)	Material

Pump Test

Draw Down	0	ft
Duration	0	hrs
Pumping Rate	0	igpm
Temperature	0	deg. F
Rec. Pumping Rate	0	igpm

Lithology List

Depth (ft):	Material	Colour	Description
28	Sand	Brown	Silty
60	Sand	Grey	Clay Streaks

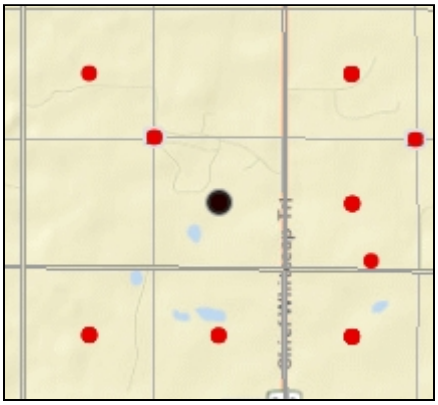

Water Well Driller's Report

5-Jul-2023
WSaskWWDR01
(c) Water Security Agency

Well Name: Kenmore Land Co. WWDR #: 234049

Well Location

Land Location	SE-29-35-05-3	Location of Well (in Quarter)	
LSD		ft from N/S Boundary	
Reserve		ft from E/W Boundary	
RM:	344		
NTS Map:	73B02	Major Basin:	
Elevation (ft)	1646	SubBasin:	30
Aquifer			

Well Information

Driller	Wellen Boring Ltd.
Completion Date	2014.07.24
Hole #	00000002
Install Method	Augered
Borehole Depth (ft)	50
Bit Dia (in)	6
Water Level	20
Flowing Head	0
Water Use	
Well Use	Water Test Hole
Completion Method	
E-Log	None

Well Casings

Length (ft)	Btm (ft)	Dia (in)	Material

Well Screens

Length (ft)	Bottom (ft)	Dia (in)	Slot (in)	Material

Pump Test

Draw Down	0	ft
Duration	0	hrs
Pumping Rate	0	igpm
Temperature	0	deg. F
Rec. Pumping Rate	0	igpm

Lithology List

Depth (ft):	Material	Colour	Description
24	Clay	Brown	Firm
28	Sand	Brown	Fine
35	Clay	Grey	Unknown
50	Clay	Unknown	Unknown

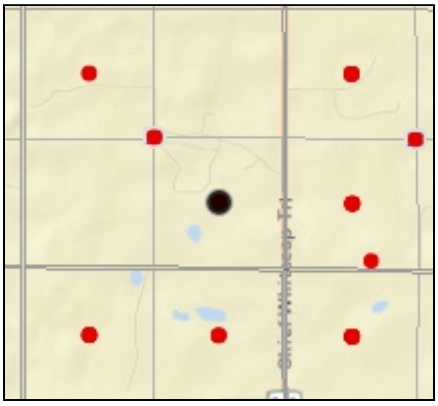

Water Well Driller's Report

5-Jul-2023
WSaskWWDR01
(c) Water Security Agency

Well Name: Kenmore Land Co. WWDR #: 234050

Well Location

Land Location	SE-29-35-05-3	Location of Well (in Quarter)	
LSD		ft from N/S Boundary	
Reserve		ft from E/W Boundary	
RM:	344		
NTS Map:	73B02	Major Basin:	
Elevation (ft)	1646	SubBasin:	30
Aquifer			

Well Information

Driller	Wellen Boring Ltd.
Completion Date	2014.07.24
Hole #	00000003
Install Method	Augered
Borehole Depth (ft)	50
Bit Dia (in)	6
Water Level	25
Flowing Head	0
Water Use	
Well Use	Water Test Hole
Completion Method	
E-Log	None

Well Casings

Length (ft)	Btm (ft)	Dia (in)	Material

Well Screens

Length (ft)	Bottom (ft)	Dia (in)	Slot (in)	Material

Pump Test

Draw Down	0	ft
Duration	0	hrs
Pumping Rate	0	igpm
Temperature	0	deg. F
Rec. Pumping Rate	0	igpm

Lithology List

Depth (ft):	Material	Colour	Description
6	Sand	Brown	Fine
18	Clay	Brown	Unknown
28	Clay	Grey	Unknown
34	Sand	Grey	Fine
50	Clay	Grey	Silty

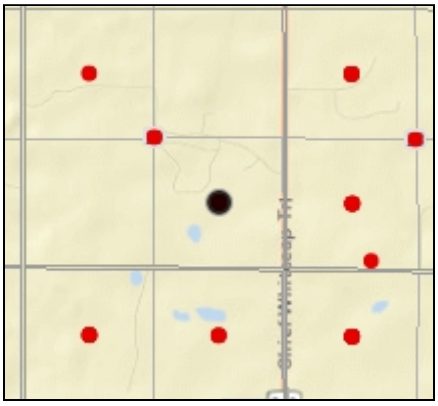

Water Well Driller's Report

14-Jun-2023
WSaskWWDR01
(c) Water Security Agency

Well Name: Saskatoon SPCA

WWDR #: 238033

Well Location

Land Location	16-NE-28-35-05-3
LSD	16
Reserve	
RM:	344
NTS Map:	73B02
Elevation (ft)	1673
Aquifer	

Location of Well (in Quarter)

ft from N/S Boundary

ft from E/W Boundary

Major Basin:

SubBasin: 30

Well Information

Driller	Parkland Drilling Ltd.
Completion Date	2017.07.24
Hole #	00000001
Install Method	Drilled
Borehole Depth (ft)	35
Bit Dia (in)	8.8
Water Level	10
Flowing Head	0
Water Use	Other
Well Use	Withdrawal
Completion Method	Well Screen And Gravel Pack
E-Log	None

Well Casings

Length (ft)	Btm (ft)	Dia (in)	Material
10	8	6.3	Steel

Well Screens

Length (ft)	Bottom (ft)	Dia (in)	Slot (in)	Material
26	33	6	5	Steel Casing

Pump Test

Draw Down	0	ft
Duration	48	hrs
Pumping Rate	1.3	igpm
Temperature	40	deg. F
Rec. Pumping Rate	2	igpm

Lithology List

Depth (ft):	Material	Colour	Description
8	Sand	Grey	Fine
16	Clay	Unknown	Silty
23	Sand	Brown	Fine
35	Silt	Unknown	Soft

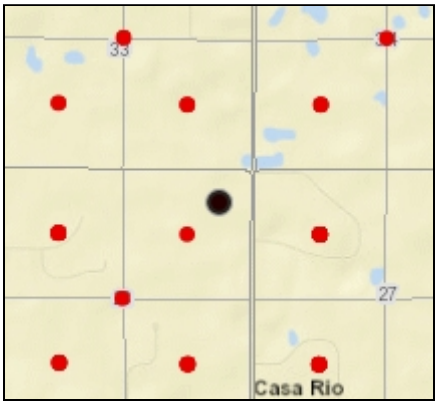

Water Well Driller's Report

5-Jul-2023
WSaskWWDR01
(c) Water Security Agency

Well Name: Lucyshyn WWDR #: 239769

Well Location

Land Location	NE-33-35-05-3	Location of Well (in Quarter)	
LSD		ft from N/S Boundary	
Reserve		ft from E/W Boundary	
RM:	344		
NTS Map:	73B02	Major Basin:	
Elevation (ft)	1673	SubBasin:	30
Aquifer			

Well Information

Driller	Wellen Boring Ltd.
Completion Date	2018.06.26
Hole #	00000002
Install Method	Augered
Borehole Depth (ft)	50
Bit Dia (in)	60
Water Level	12
Flowing Head	0
Water Use	
Well Use	Water Test Hole
Completion Method	
E-Log	None

Well Casings

Length (ft)	Btm (ft)	Dia (in)	Material

Well Screens

Length (ft)	Bottom (ft)	Dia (in)	Slot (in)	Material

Pump Test

Draw Down	0	ft
Duration	0	hrs
Pumping Rate	0	igpm
Temperature	0	deg. F
Rec. Pumping Rate	0	igpm

Lithology List

Depth (ft):	Material	Colour	Description
4	Sand	Brown	Fine
9	Clay	Brown	Firm
18	Sand	Brown	Fine
35	Silty Clay	Grey	Unknown
50	Clay	Grey	Firm

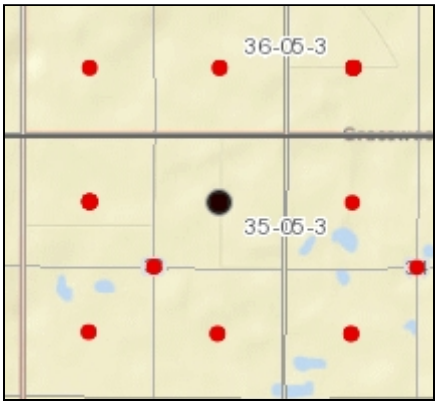

Water Well Driller's Report

5-Jul-2023
WSaskWWDR01
(c) Water Security Agency

Well Name: Lucyshyn WWDR #: 239770

Well Location

Land Location	NE-33-35-05-3	Location of Well (in Quarter)	
LSD		ft from N/S Boundary	
Reserve		ft from E/W Boundary	
RM:	344		
NTS Map:	73B02	Major Basin:	
Elevation (ft)	1673	SubBasin:	30
Aquifer			

Well Information

Driller	Wellen Boring Ltd.
Completion Date	2018.06.26
Hole #	00000003
Install Method	Augered
Borehole Depth (ft)	40
Bit Dia (in)	6
Water Level	12
Flowing Head	0
Water Use	
Well Use	Water Test Hole
Completion Method	
E-Log	None

Well Casings

Length (ft)	Btm (ft)	Dia (in)	Material

Well Screens

Length (ft)	Bottom (ft)	Dia (in)	Slot (in)	Material

Pump Test

Draw Down	0	ft
Duration	0	hrs
Pumping Rate	0	igpm
Temperature	0	deg. F
Rec. Pumping Rate	0	igpm

Lithology List

Depth (ft):	Material	Colour	Description
4	Sand	Brown	Fine
10	Clay	Brown	Unknown
16	Sand	Brown	Fine
24	Silty Clay	Brown	Unknown
30	Silty Clay	Grey	Unknown
40	Clay	Grey	Firm

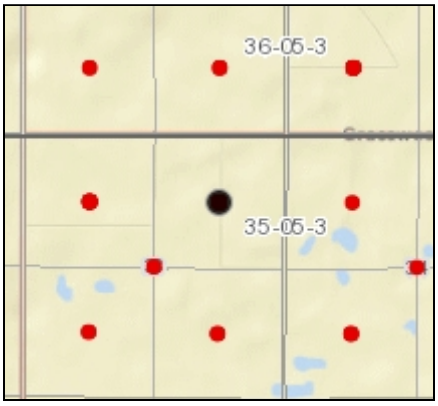

Water Well Driller's Report

5-Jul-2023

WSaskWWDR01

(c) Water Security Agency

Well Name: Gillespie Developments

WWDR #: 239801

Well Location

Land Location	SE-23-35-05-3	Location of Well (in Quarter)	
LSD		ft from N/S Boundary	
Reserve		ft from E/W Boundary	
RM:	344		
NTS Map:	73B02	Major Basin:	
Elevation (ft)	1673	SubBasin:	30
Aquifer			

Well Information

Driller	Wellen Boring Ltd.
Completion Date	2018.05.16
Hole #	00000001
Install Method	Augered
Borehole Depth (ft)	30
Bit Dia (in)	6
Water Level	0
Flowing Head	0
Water Use	
Well Use	Water Test Hole
Completion Method	
E-Log	None

Well Casings

Length (ft)	Btm (ft)	Dia (in)	Material

Well Screens

Length (ft)	Bottom (ft)	Dia (in)	Slot (in)	Material

Pump Test

Draw Down	0	ft
Duration	0	hrs
Pumping Rate	0	igpm
Temperature	0	deg. F
Rec. Pumping Rate	0	igpm

Lithology List

Depth (ft):	Material	Colour	Description
5	Sand	Brown	Silty
12	Clay	Brown	Firm
30	Clay	Grey	Firm

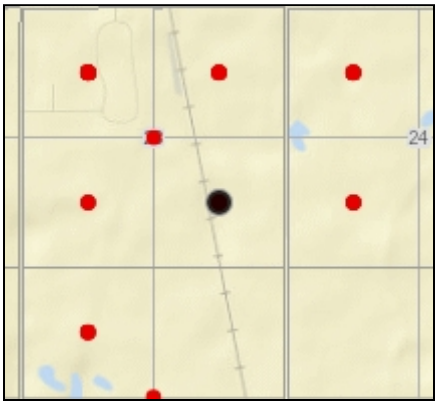

Water Well Driller's Report

5-Jul-2023

WSaskWWDR01

(c) Water Security Agency

Well Name: Gillespie Developments

WWDR #: 239802

Well Location

Land Location	SE-23-35-05-3	Location of Well (in Quarter)	
LSD		ft from N/S Boundary	
Reserve		ft from E/W Boundary	
RM:	344		
NTS Map:	73B02	Major Basin:	
Elevation (ft)	1673	SubBasin:	30
Aquifer			

Well Information

Driller	Wellen Boring Ltd.
Completion Date	2018.05.16
Hole #	00000002
Install Method	Augered
Borehole Depth (ft)	30
Bit Dia (in)	6
Water Level	7
Flowing Head	0
Water Use	
Well Use	Water Test Hole
Completion Method	
E-Log	None

Well Casings

Length (ft)	Btm (ft)	Dia (in)	Material

Well Screens

Length (ft)	Bottom (ft)	Dia (in)	Slot (in)	Material

Pump Test

Draw Down	0	ft
Duration	0	hrs
Pumping Rate	0	igpm
Temperature	0	deg. F
Rec. Pumping Rate	0	igpm

Lithology List

Depth (ft):	Material	Colour	Description
7	Sand	Brown	Fine
9	Clay	Brown	Soft
16	Sand	Grey	Fine
22	Clay	Grey	Silty
30	Clay	Grey	Unknown

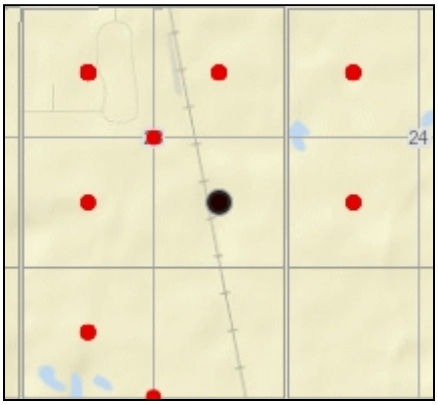

Water Well Driller's Report

5-Jul-2023
WSaskWWDR01
(c) Water Security Agency

Well Name: Meewasin Valley Authority WWDR #: 240949

Well Location

Land Location	NE-06-35-05-3	Location of Well (in Quarter)	
LSD		ft from N/S Boundary	
Reserve		ft from E/W Boundary	
RM:	344		
NTS Map:	72O15	Major Basin:	
Elevation (ft)	1614	SubBasin:	30
Aquifer			

Well Information

Driller	Wellen Boring Ltd.
Completion Date	2018.09.20
Hole #	00000001
Install Method	Augered
Borehole Depth (ft)	50
Bit Dia (in)	6
Water Level	0
Flowing Head	0
Water Use	
Well Use	Water Test Hole
Completion Method	
E-Log	None

Well Casings

Length (ft)	Btm (ft)	Dia (in)	Material

Well Screens

Length (ft)	Bottom (ft)	Dia (in)	Slot (in)	Material

Pump Test

Draw Down	0	ft
Duration	0	hrs
Pumping Rate	0	igpm
Temperature	0	deg. F
Rec. Pumping Rate	0	igpm

Lithology List

Depth (ft):	Material	Colour	Description
28	Sand	Brown	Fine
35	Sand	Brown	Unknown
43	Sand	Grey	Unknown
50	Sand	Grey	Fine

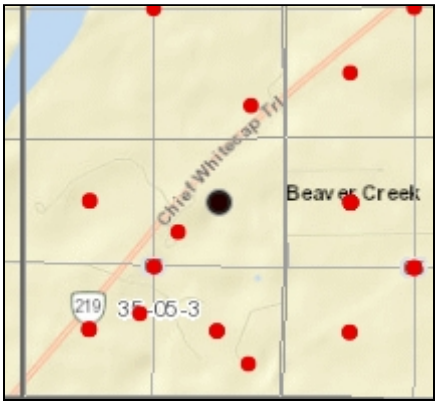

Water Well Driller's Report

5-Jul-2023
WSaskWWDR01
(c) Water Security Agency

Well Name: Meewasin Valley Authority WWDR #: 240950

Well Location

Land Location	NE-06-35-05-3	Location of Well (in Quarter)	
LSD		ft from N/S Boundary	
Reserve		ft from E/W Boundary	
RM:	344		
NTS Map:	72O15	Major Basin:	
Elevation (ft)	1614	SubBasin:	30
Aquifer			

Well Information

Driller	Wellen Boring Ltd.
Completion Date	2018.09.20
Hole #	00000002
Install Method	Augered
Borehole Depth (ft)	30
Bit Dia (in)	5
Water Level	0
Flowing Head	0
Water Use	
Well Use	Water Test Hole
Completion Method	
E-Log	None

Well Casings

Length (ft)	Btm (ft)	Dia (in)	Material

Well Screens

Length (ft)	Bottom (ft)	Dia (in)	Slot (in)	Material

Pump Test

Draw Down	0	ft
Duration	0	hrs
Pumping Rate	0	igpm
Temperature	0	deg. F
Rec. Pumping Rate	0	igpm

Lithology List

Depth (ft):	Material	Colour	Description
15	Sand	Brown	Fine
23	Clay	Brown	Unknown
30	Clay	Grey	Unknown

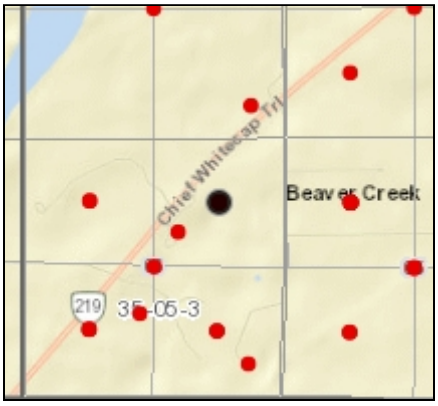

Water Well Driller's Report

5-Jul-2023

WSaskWWDR01

(c) Water Security Agency

Well Name: Meewasin Valley Authority

WWDR #: 241001

Well Location

Land Location	NE-06-35-05-3	Location of Well (in Quarter)	
LSD		ft from N/S Boundary	
Reserve		ft from E/W Boundary	
RM:	344		
NTS Map:	72O15	Major Basin:	
Elevation (ft)	1614	SubBasin:	30
Aquifer			

Well Information

Driller	Wellen Boring Ltd.
Completion Date	2018.09.20
Hole #	00000001
Install Method	Augered
Borehole Depth (ft)	25
Bit Dia (in)	6
Water Level	0
Flowing Head	0
Water Use	
Well Use	Water Test Hole
Completion Method	
E-Log	None

Well Casings

Length (ft)	Btm (ft)	Dia (in)	Material

Well Screens

Length (ft)	Bottom (ft)	Dia (in)	Slot (in)	Material

Pump Test

Draw Down	0	ft
Duration	0	hrs
Pumping Rate	0	igpm
Temperature	0	deg. F
Rec. Pumping Rate	0	igpm

Lithology List

Depth (ft):	Material	Colour	Description
15	Sand	Brown	Fine
23	Clay	Brown	Unknown
25	Clay	Grey	Unknown

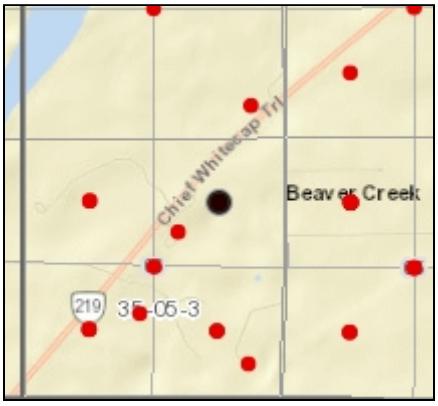

Water Well Driller's Report

14-Jun-2023
WSaskWWDR01
(c) Water Security Agency

Well Name: Vanderpost

WWDR #: 241009

Well Location

Land Location	NE-07-35-04-3	Location of Well (in Quarter)	
LSD		ft from N/S Boundary	
Reserve		ft from E/W Boundary	
RM:	344		
NTS Map:	72O15	Major Basin:	
Elevation (ft)	1682	SubBasin:	30
Aquifer			

Well Information

Driller	Wellen Boring Ltd.
Completion Date	2018.10.22
Hole #	
Install Method	Bored
Borehole Depth (ft)	51
Bit Dia (in)	42
Water Level	13
Flowing Head	0
Water Use	Research
Well Use	Withdrawal
Completion Method	Perforated Casing
E-Log	None

Well Casings

Length (ft)	Btm (ft)	Dia (in)	Material
53	51	30	Fiberglass

Well Screens

Length (ft)	Bottom (ft)	Dia (in)	Slot (in)	Material
35	51	30	70	Fiberglass

Pump Test

Draw Down	0	ft
Duration	1	hrs
Pumping Rate	20	igpm
Temperature	0	deg. F
Rec. Pumping Rate	16	igpm

Lithology List

Depth (ft):	Material	Colour	Description
15	Sand	Brown	Silty
20	Sand	Brown	Unknown
28	Sand	Grey	Unknown
35	Silty Clay	Grey	Unknown
51	Silty Clay	Grey	Sand Streaks

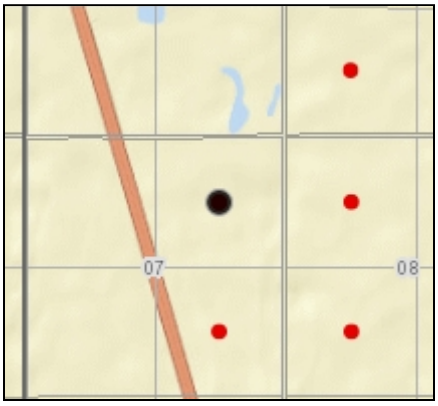

Water Well Driller's Report

5-Jul-2023
WSaskWWDR01
(c) Water Security Agency

Well Name: Khan

WWDR #: 241029

Well Location

Land Location	SW-31-35-05-3	Location of Well (in Quarter)	
LSD		ft from N/S Boundary	
Reserve		ft from E/W Boundary	
RM:	344		
NTS Map:	73B02	Major Basin:	
Elevation (ft)	1611	SubBasin:	30
Aquifer			

Well Information

Driller	Wellen Boring Ltd.
Completion Date	2020.05.28
Hole #	00000001
Install Method	Augered
Borehole Depth (ft)	50
Bit Dia (in)	0
Water Level	0
Flowing Head	0
Water Use	
Well Use	Water Test Hole
Completion Method	
E-Log	None

Well Casings

Length (ft)	Btm (ft)	Dia (in)	Material

Well Screens

Length (ft)	Bottom (ft)	Dia (in)	Slot (in)	Material

Pump Test

Draw Down	0	ft
Duration	0	hrs
Pumping Rate	0	igpm
Temperature	0	deg. F
Rec. Pumping Rate	0	igpm

Lithology List

Depth (ft):	Material	Colour	Description
12	Sand	Brown	Unknown
25	Clay	Unknown	Silty
50	Clay	Grey	Unknown

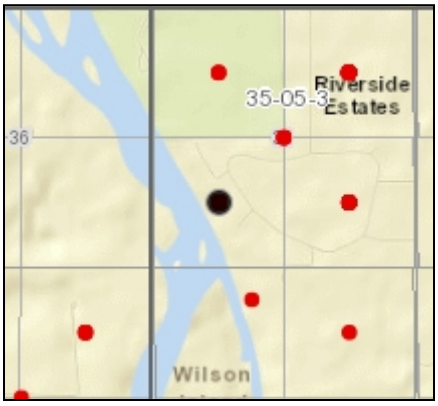

Water Well Driller's Report

5-Jul-2023
WSaskWWDR01
(c) Water Security Agency

Well Name: Khan

WWDR #: 241030

Well Location

Land Location	SW-31-35-05-3	Location of Well (in Quarter)	
LSD		ft from N/S Boundary	
Reserve		ft from E/W Boundary	
RM:	344		
NTS Map:	73B02	Major Basin:	
Elevation (ft)	1611	SubBasin:	30
Aquifer			

Well Information

Driller	Wellen Boring Ltd.
Completion Date	2020.05.28
Hole #	00000002
Install Method	Augered
Borehole Depth (ft)	40
Bit Dia (in)	0
Water Level	0
Flowing Head	0
Water Use	
Well Use	Water Test Hole
Completion Method	
E-Log	None

Well Casings

Length (ft)	Btm (ft)	Dia (in)	Material

Well Screens

Length (ft)	Bottom (ft)	Dia (in)	Slot (in)	Material

Pump Test

Draw Down	0	ft
Duration	0	hrs
Pumping Rate	0	igpm
Temperature	0	deg. F
Rec. Pumping Rate	0	igpm

Lithology List

Depth (ft):	Material	Colour	Description
25	Sand	Brown	Unknown
40	Clay	Grey	Silty

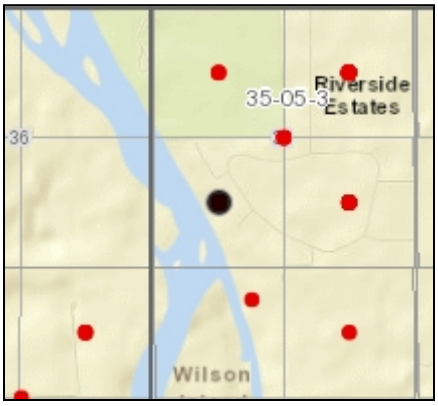

Water Well Driller's Report

5-Jul-2023
WSaskWWDR01
(c) Water Security Agency

Well Name: Khan

WWDR #: 241031

Well Location

Land Location	SW-31-35-05-3	Location of Well (in Quarter)	
LSD		ft from N/S Boundary	
Reserve		ft from E/W Boundary	
RM:	344		
NTS Map:	73B02	Major Basin:	
Elevation (ft)	1611	SubBasin:	30
Aquifer			

Well Information

Driller	Wellen Boring Ltd.
Completion Date	2020.05.28
Hole #	00000003
Install Method	Augered
Borehole Depth (ft)	60
Bit Dia (in)	0
Water Level	0
Flowing Head	0
Water Use	
Well Use	Water Test Hole
Completion Method	
E-Log	None

Well Casings

Length (ft)	Btm (ft)	Dia (in)	Material

Well Screens

Length (ft)	Bottom (ft)	Dia (in)	Slot (in)	Material

Pump Test

Draw Down	0	ft
Duration	0	hrs
Pumping Rate	0	igpm
Temperature	0	deg. F
Rec. Pumping Rate	0	igpm

Lithology List

Depth (ft):	Material	Colour	Description
18	Sand	Brown	Fine
30	Clay	Unknown	Silty
50	Sand	Unknown	Silty
60	Clay	Grey	Unknown

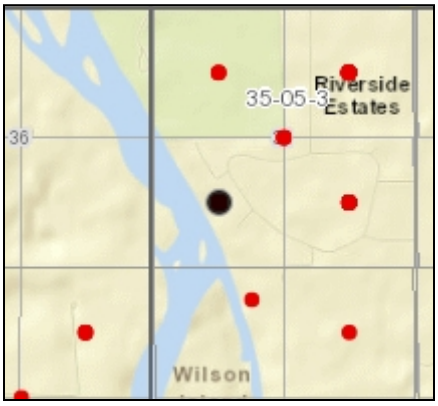

Water Well Driller's Report

5-Jul-2023
WSaskWWDR01
(c) Water Security Agency

Well Name: Khan

WWDR #: 241032

Well Location

Land Location	SW-31-35-05-3	Location of Well (in Quarter)	
LSD		ft from N/S Boundary	
Reserve		ft from E/W Boundary	
RM:	344		
NTS Map:	73B02	Major Basin:	
Elevation (ft)	1611	SubBasin:	30
Aquifer			

Well Information

Driller	Wellen Boring Ltd.
Completion Date	2020.05.28
Hole #	00000004
Install Method	Augered
Borehole Depth (ft)	40
Bit Dia (in)	0
Water Level	0
Flowing Head	0
Water Use	
Well Use	Water Test Hole
Completion Method	
E-Log	None

Well Casings

Length (ft)	Btm (ft)	Dia (in)	Material

Well Screens

Length (ft)	Bottom (ft)	Dia (in)	Slot (in)	Material

Pump Test

Draw Down	0	ft
Duration	0	hrs
Pumping Rate	0	igpm
Temperature	0	deg. F
Rec. Pumping Rate	0	igpm

Lithology List

Depth (ft):	Material	Colour	Description
18	Sand	Brown	Silty
40	Clay	Unknown	Silty

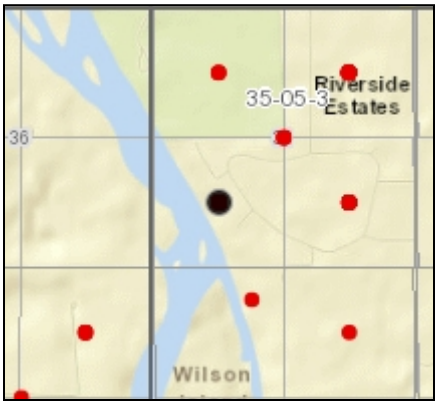

Water Well Driller's Report

5-Jul-2023

WSaskWWDR01

(c) Water Security Agency

Well Name: Green Prairie Environmental

WWDR #: 241193

Well Location

Land Location	NW-20-35-05-3	Location of Well (in Quarter)	
LSD		ft from N/S Boundary	
Reserve		ft from E/W Boundary	
RM:	344		
NTS Map:	73B02	Major Basin:	
Elevation (ft)	1668	SubBasin:	30
Aquifer			

Well Information

Driller	Mitchell Drilling Water Wells Ltd.
Completion Date	2019.05.01
Hole #	00000001
Install Method	Drilled
Borehole Depth (ft)	96
Bit Dia (in)	5.1
Water Level	0
Flowing Head	0
Water Use	
Well Use	Water Test Hole
Completion Method	
E-Log	Recd

Well Casings

Length (ft)	Btm (ft)	Dia (in)	Material

Well Screens

Length (ft)	Bottom (ft)	Dia (in)	Slot (in)	Material

Pump Test

Draw Down	0	ft
Duration	0	hrs
Pumping Rate	0	igpm
Temperature	0	deg. F
Rec. Pumping Rate	0	igpm

Lithology List

Depth (ft):	Material	Colour	Description
12	Sand	Brown	Unknown
22	Till	Brown	Unknown
52	Till	Grey	Unknown
96	Till	Grey	Silty

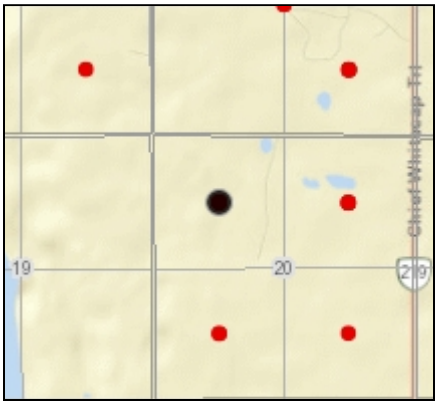

Water Well Driller's Report

5-Jul-2023

WSaskWWDR01

(c) Water Security Agency

Well Name: Green Prairie Environmental

WWDR #: 241194

Well Location

Land Location	NW-20-35-05-3	Location of Well (in Quarter)	
LSD		ft from N/S Boundary	
Reserve		ft from E/W Boundary	
RM:	344		
NTS Map:	73B02	Major Basin:	
Elevation (ft)	1668	SubBasin:	30
Aquifer			

Well Information

Driller	Mitchell Drilling Water Wells Ltd.
Completion Date	2019.05.02
Hole #	00000002
Install Method	Drilled
Borehole Depth (ft)	96
Bit Dia (in)	5.1
Water Level	0
Flowing Head	0
Water Use	
Well Use	Water Test Hole
Completion Method	
E-Log	Recd

Well Casings

Length (ft)	Btm (ft)	Dia (in)	Material

Well Screens

Length (ft)	Bottom (ft)	Dia (in)	Slot (in)	Material

Pump Test

Draw Down	0	ft
Duration	0	hrs
Pumping Rate	0	igpm
Temperature	0	deg. F
Rec. Pumping Rate	0	igpm

Lithology List

Depth (ft):	Material	Colour	Description
16	Till	Brown	Unknown
30	Till	Brown	Unknown
69	Till	Grey	Firm
96	Till	Grey	Silty

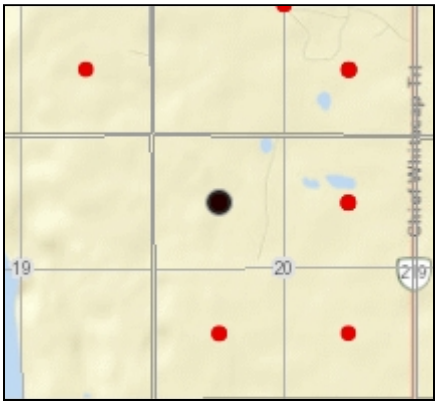

Water Well Driller's Report

5-Jul-2023

WSaskWWDR01

(c) Water Security Agency

Well Name: Green Prairie Environmental

WWDR #: 241195

Well Location

Land Location	NW-20-35-05-3	Location of Well (in Quarter)	
LSD		ft from N/S Boundary	
Reserve		ft from E/W Boundary	
RM:	344		
NTS Map:	73B02	Major Basin:	
Elevation (ft)	1668	SubBasin:	30
Aquifer			

Well Information

Driller	Mitchell Drilling Water Wells Ltd.
Completion Date	2019.05.02
Hole #	00000003
Install Method	Drilled
Borehole Depth (ft)	96
Bit Dia (in)	5.1
Water Level	0
Flowing Head	0
Water Use	
Well Use	Water Test Hole
Completion Method	
E-Log	Recd

Well Casings

Length (ft)	Btm (ft)	Dia (in)	Material

Well Screens

Length (ft)	Bottom (ft)	Dia (in)	Slot (in)	Material

Pump Test

Draw Down	0	ft
Duration	0	hrs
Pumping Rate	0	igpm
Temperature	0	deg. F
Rec. Pumping Rate	0	igpm

Lithology List

Depth (ft):	Material	Colour	Description
10	Sand	Brown	Unknown
25	Till	Brown	Unknown
41	Till	Grey	Unknown
59	Silt	Grey	Fine
96	Silty Clay	Unknown	Soft

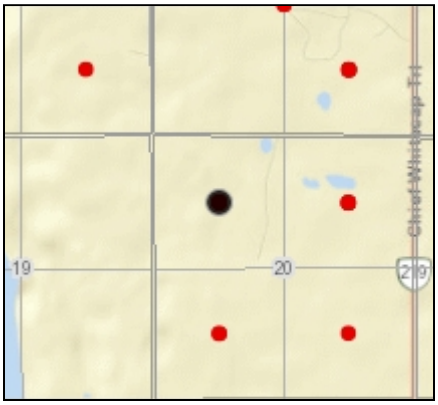

Water Well Driller's Report

14-Jun-2023
WSaskWWDR01
(c) Water Security Agency

Well Name: Green Prairie Environmental WWDR #: 241196

Well Location

Land Location	NW-20-35-05-3	Location of Well (in Quarter)	
LSD		ft from N/S Boundary	
Reserve		ft from E/W Boundary	
RM:	344		
NTS Map:	73B02	Major Basin:	
Elevation (ft)	1668	SubBasin:	30
Aquifer			

Well Information

Driller	Mitchell Drilling Water Wells Ltd.
Completion Date	2019.05.03
Hole #	00000004
Install Method	Drilled
Borehole Depth (ft)	96
Bit Dia (in)	5.1
Water Level	17
Flowing Head	0
Water Use	Industrial
Well Use	Withdrawal
Completion Method	Well Screen And Gravel Pack
E-Log	Recd

Well Casings

Length (ft)	Btm (ft)	Dia (in)	Material
27	25	5	P.V.C.

Well Screens

Length (ft)	Bottom (ft)	Dia (in)	Slot (in)	Material
15	40	5	15	Steel Casing

Pump Test

Draw Down	6	ft
Duration	4	hrs
Pumping Rate	5	igpm
Temperature	44	deg. F
Rec. Pumping Rate	5	igpm

Lithology List

Depth (ft):	Material	Colour	Description
32	Sand	Brown	Unknown
40	Sand	Grey	Unknown
72	Silt	Grey	Fine
96	Silty Clay	Grey	Soft

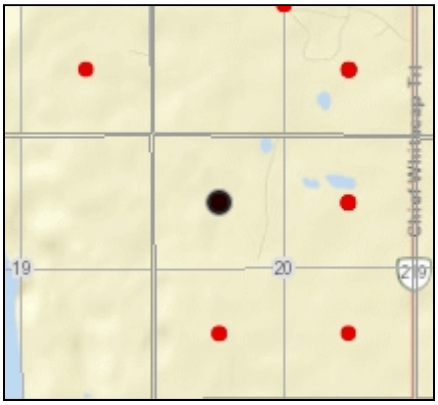

Water Well Driller's Report

8-Jun-2023
WSaskWWDR01
(c) Water Security Agency

Well Name: 102047560 Saskatchewan Ltd. WWDR #: 241215

Well Location

Land Location	NE-20-35-05-3	Location of Well (in Quarter)	
LSD		ft from N/S Boundary	
Reserve		ft from E/W Boundary	
RM:	344		
NTS Map:	73B02	Major Basin:	
Elevation (ft)	1673	SubBasin:	30
Aquifer			

Well Information

Driller	Mitchell Drilling Water Wells Ltd.
Completion Date	2019.10.11
Hole #	00000001
Install Method	
Borehole Depth (ft)	0
Bit Dia (in)	0
Water Level	0
Flowing Head	0
Water Use	
Well Use	Water Test Hole
Completion Method	
E-Log	None

Well Casings

Length (ft)	Btm (ft)	Dia (in)	Material

Well Screens

Length (ft)	Bottom (ft)	Dia (in)	Slot (in)	Material

Pump Test

Draw Down	0	ft
Duration	0	hrs
Pumping Rate	0	igpm
Temperature	0	deg. F
Rec. Pumping Rate	0	igpm

Lithology List

Depth (ft):	Material	Colour	Description
19	Till	Brown	Unknown
29	Till	Brown	Unknown
56	Clay	Grey	Soft

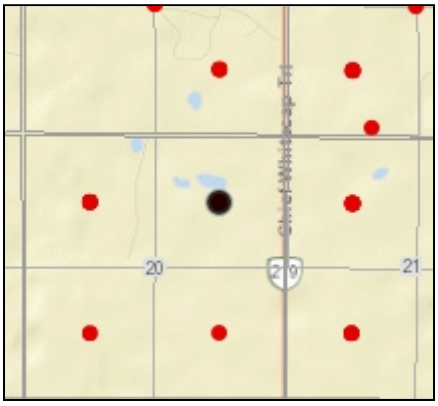

Water Well Driller's Report

5-Jul-2023
WSaskWWDR01
(c) Water Security Agency

Well Name: 102047560 Saskatchewan Ltd. WWDR #: 241216

Well Location

Land Location	NE-20-35-05-3	Location of Well (in Quarter)	
LSD		ft from N/S Boundary	
Reserve		ft from E/W Boundary	
RM:	344		
NTS Map:	73B02	Major Basin:	
Elevation (ft)	1673	SubBasin:	30
Aquifer			

Well Information

Driller	Mitchell Drilling Water Wells Ltd.
Completion Date	2019.10.11
Hole #	00000002
Install Method	Drilled
Borehole Depth (ft)	76
Bit Dia (in)	5.1
Water Level	0
Flowing Head	0
Water Use	
Well Use	Water Test Hole
Completion Method	
E-Log	None

Well Casings

Length (ft)	Btm (ft)	Dia (in)	Material

Well Screens

Length (ft)	Bottom (ft)	Dia (in)	Slot (in)	Material

Pump Test

Draw Down	0	ft
Duration	0	hrs
Pumping Rate	0	igpm
Temperature	0	deg. F
Rec. Pumping Rate	0	igpm

Lithology List

Depth (ft):	Material	Colour	Description
14	Sand	Brown	Unknown
22	Till	Brown	Unknown
36	Clay	Grey	Unknown
76	Clay	Grey	Soft

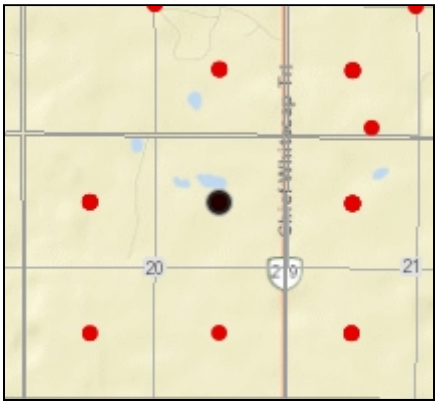

Water Well Driller's Report

5-Jul-2023
WSaskWWDR01
(c) Water Security Agency

Well Name: 102047560 Saskatchewan Ltd. WWDR #: 241217

Well Location

Land Location	NE-20-35-05-3	Location of Well (in Quarter)	
LSD		ft from N/S Boundary	
Reserve		ft from E/W Boundary	
RM:	344		
NTS Map:	73B02	Major Basin:	
Elevation (ft)	1673	SubBasin:	30
Aquifer			

Well Information

Driller	Mitchell Drilling Water Wells Ltd.
Completion Date	2019.10.11
Hole #	00000003
Install Method	
Borehole Depth (ft)	76
Bit Dia (in)	5.1
Water Level	0
Flowing Head	0
Water Use	
Well Use	Water Test Hole
Completion Method	
E-Log	Recd

Well Casings

Length (ft)	Btm (ft)	Dia (in)	Material

Well Screens

Length (ft)	Bottom (ft)	Dia (in)	Slot (in)	Material

Pump Test

Draw Down	0	ft
Duration	0	hrs
Pumping Rate	0	igpm
Temperature	0	deg. F
Rec. Pumping Rate	0	igpm

Lithology List

Depth (ft):	Material	Colour	Description
17	Sand	Brown	Unknown
23	Till	Brown	Unknown
29	Sand	Brown	Unknown
30	Cobblestones	Unknown	Unknown
36	Sand	Grey	Silty
59	Clay	Grey	Soft
76	Clay	Grey	Unknown

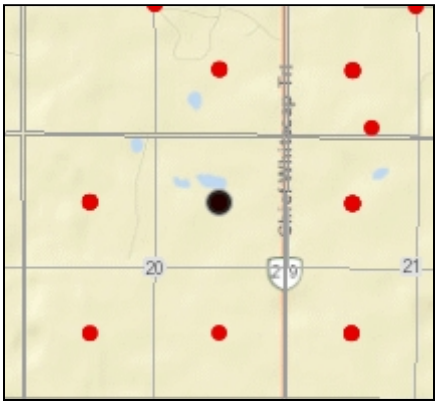

Water Well Driller's Report

14-Jun-2023
WSaskWWDR01
(c) Water Security Agency

Well Name: Meewasin Valley Authority
WWDR #: 241698

Well Location

Land Location	NE-06-35-05-3	Location of Well (in Quarter)	
LSD		ft from N/S Boundary	
Reserve		ft from E/W Boundary	
RM:	344		
NTS Map:	72O15	Major Basin:	
Elevation (ft)	1607	SubBasin:	30
Aquifer			

Well Information

Driller	Wellen Boring Ltd.
Completion Date	2019.08.20
Hole #	
Install Method	Bored
Borehole Depth (ft)	54
Bit Dia (in)	4.5
Water Level	23
Flowing Head	0
Water Use	Recreation
Well Use	Withdrawal
Completion Method	Perforated Casing
E-Log	None

Well Casings

Length (ft)	Btm (ft)	Dia (in)	Material
56	54	30	Fiberglass

Well Screens

Length (ft)	Bottom (ft)	Dia (in)	Slot (in)	Material
26	54	30	70	Fiberglass

Pump Test

Draw Down	0	ft
Duration	1	hrs
Pumping Rate	80	igpm
Temperature	0	deg. F
Rec. Pumping Rate	60	igpm

Lithology List

Depth (ft):	Material	Colour	Description
28	Sand	Brown	Unknown
44	Sand	Grey	Unknown
46	Clay	Grey	Silt
54	Sand	Grey	Unknown

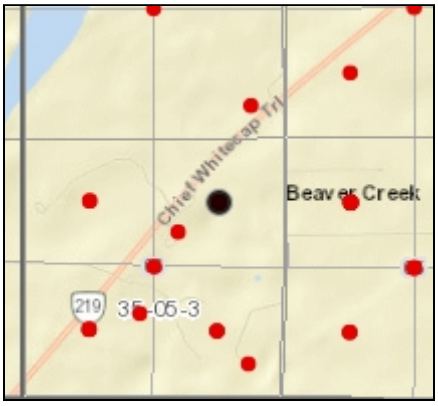

Appendix A.2

Figures for 2.0 Potable Water

The inventory of the public water wells located within the SADP is included as an Excel spreadsheet.

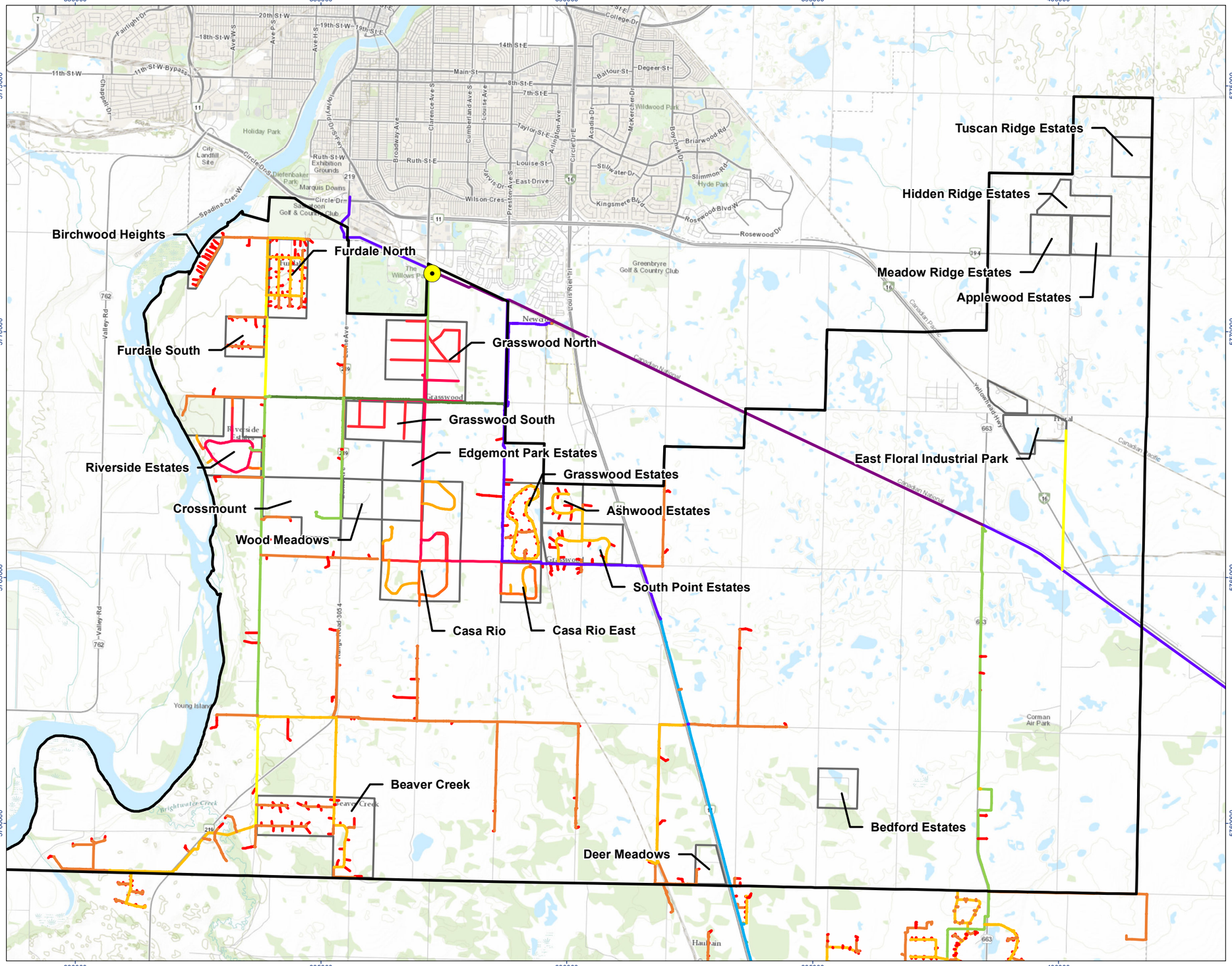

Stantec

Legend

- Study Area
- Clarence Avenue Booster Station
- Community Boundaries

Water Rural Pipelines

- 25mm
- 50mm
- 75mm
- 100mm
- 150mm
- 200mm
- 250mm
- 300mm
- 350mm

N

0 1 2 Kilometers

(At original document size of 11x17)
1:80,000

Notes

1. Coordinate System: NAD 1983 UTM Zone 13N
2. Data Sources: Base features produced under license with the Government of Saskatchewan and the Government of Canada.
3. Background Orthoimagery: Sources: Esri, HERE, Garmin, Intermap, increment P Corp., GEBCO, USGS, FAO, NPS, NRCAN, GeoBase, IGN, Kadaster NL, Ordnance Survey, Esri

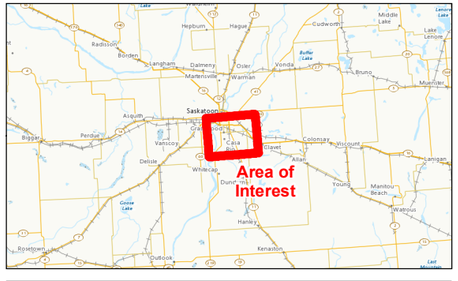

Project Location
RM of Corman Park,
Saskatchewan

Prepared by ADC on 2023-10-23
TR by SS on 2023-10-23
IR Review by XX on 2023-10-23

Client/Project
RM of Corman Park

111000545-001 REVB

Figure No.
A.2.1

Title
Potable Water Servicing – Water Distribution Pipelines

G:_GIS_Project_Folder\00_FromSask\111000545_RMCormanParkLandmin\data_in\20230628_water-study\FigureA-2-1_PotableWaterServicing_20231020.mxd Revised: 2023-10-23 By: mathughes

Disclaimer: This document has been prepared based on information provided by others as cited in the Notes section. Stantec has not verified the accuracy and/or completeness of this information and shall not be responsible for any errors or omissions which may be incorporated herein as a result. Stantec assumes no responsibility for data supplied in electronic format, and the recipient accepts full responsibility for verifying the accuracy and completeness of the data.

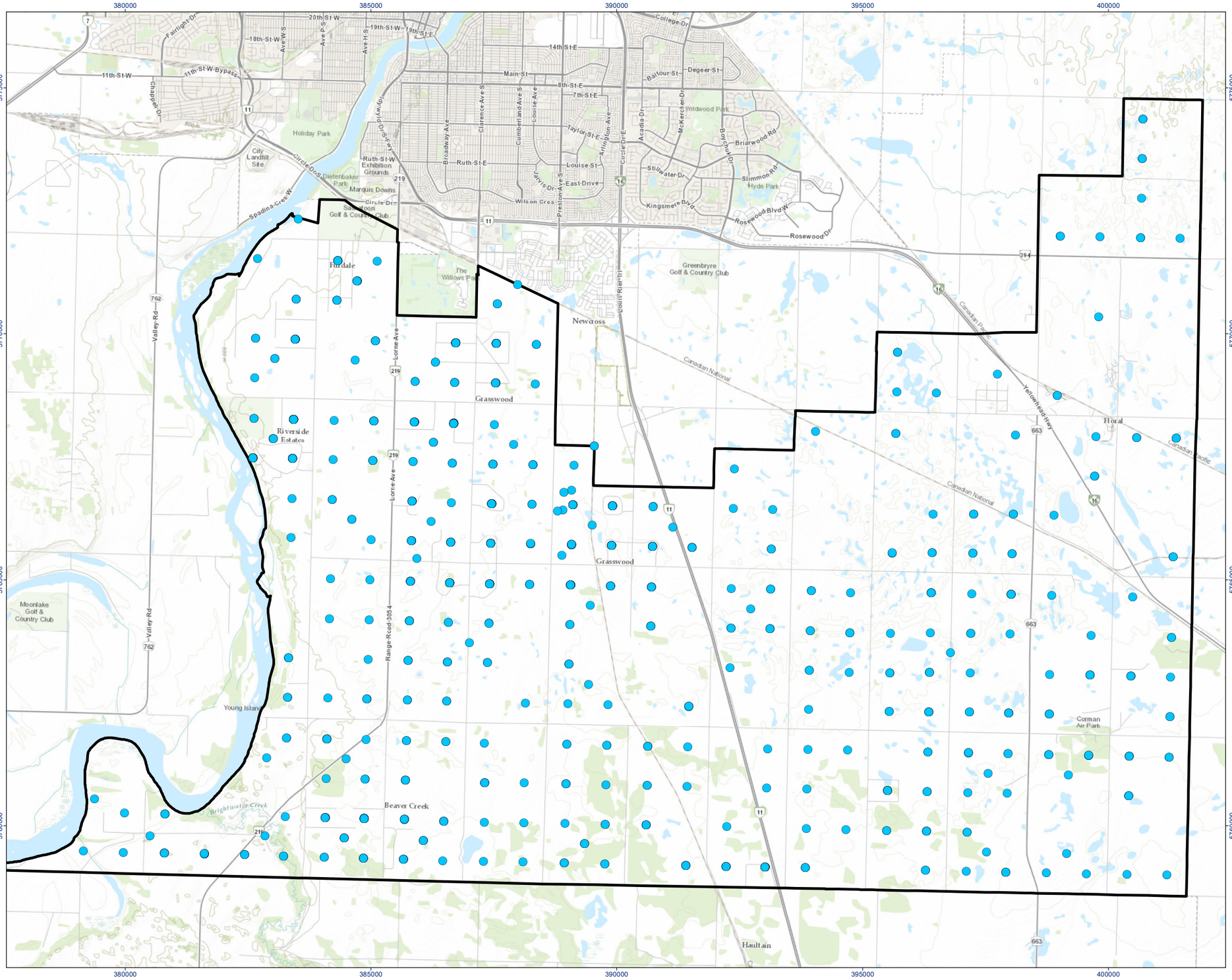

Stantec

Legend

- Study Area
- Domestic Water Withdrawal Well Locations *

* Markers do not represent the actual location of the well but rather the centroid of the quarter-section where it is contained.

N

0 1 2 Kilometers

(At original document size of 11x17)
1:80,000

Notes

1. Coordinate System: NAD 1983 UTM Zone 13N
2. Data Sources: Base features produced under license with the Government of Saskatchewan and the Government of Canada.
3. Background Orthoimagery: Sources: Esri, HERE, Garmin, Intermap, increment P Corp., GEBCO, USGS, FAO, NPS, NRCAN, GeoBase, IGN, Kadaster NL, Ordnance Survey, Esri

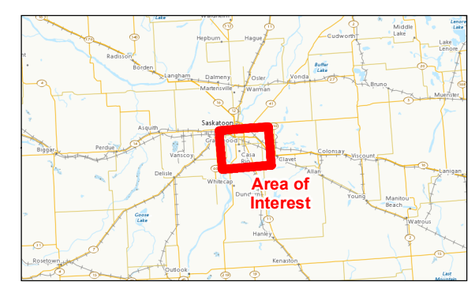

Project Location
RM of Corman Park,
Saskatchewan

Prepared by ADC on 2023-10-20
TR by SS on 2023-10-20
IR Review by XX on 2023-10-20

Client/Project
RM of Corman Park

111000545-001 REVB

Figure No.
A.2.2

Title
Potable Water Servicing – Domestic Water Wells

G:_GIS_Project_Folder\00_FromSask\111000545_RMCormanPark\admin\data_in\20230628_water-study\FigureA-2-2_PotableWaterServicing_20231020.mxd Revised: 2023-10-20 By: mathughes

Disclaimer: This document has been prepared based on information provided by others as cited in the Notes section. Stantec has not verified the accuracy and/or completeness of this information and shall not be responsible for any errors or omissions which may be incorporated herein as a result. Stantec assumes no responsibility for data supplied in electronic format, and the recipient accepts full responsibility for verifying the accuracy and completeness of the data.

Water Distribution - Others

1. Canron Water Supply
2. Southeast Corman Park Rural Water Corporation
3. Edgemont Estates
4. Hidden Ridge Country Estates
5. Tuscan Ridge - LWRU
6. RR3045 South Water Corporation
7. South Yellowhead Water Corporation

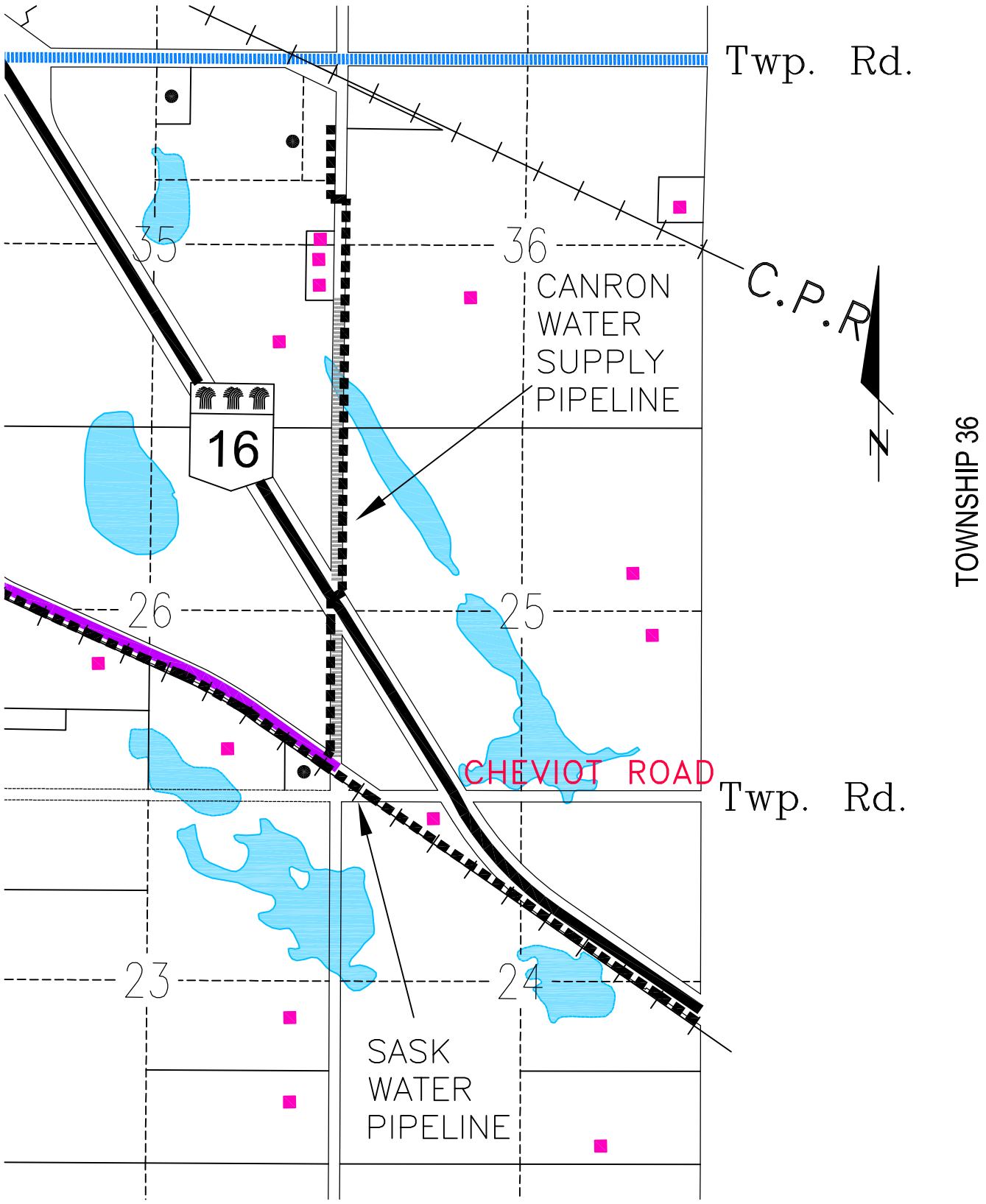

R.M. OF CORMAN PARK #344 111 PINEHOUSE DRIVE SASKATOON, SASKATCHEWAN		SASK WATER SASKATOON EAST TREATED WATER SUPPLY and CANRON WATER SUPPLY PIPELINE LOCATION LOCATION MAP		
		DRAWN D.T.K.	SCALE N.T.S.	DATE SEPT 23, 2009

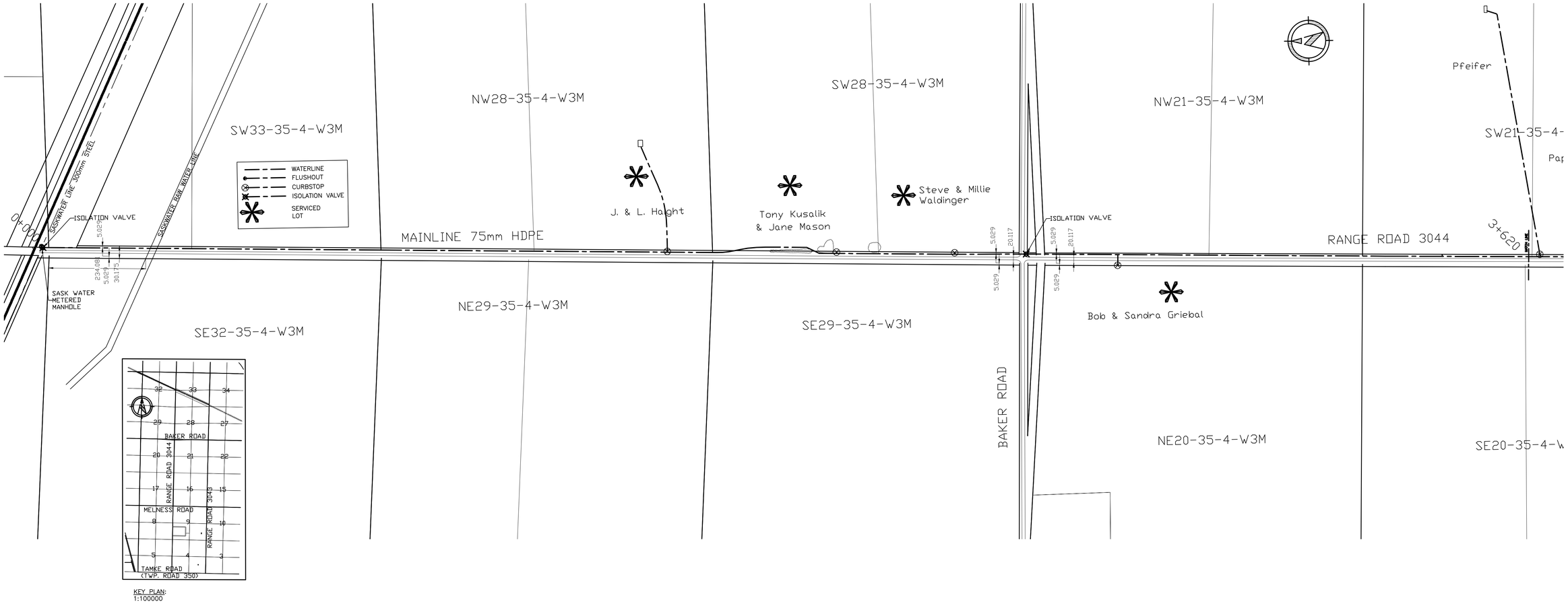

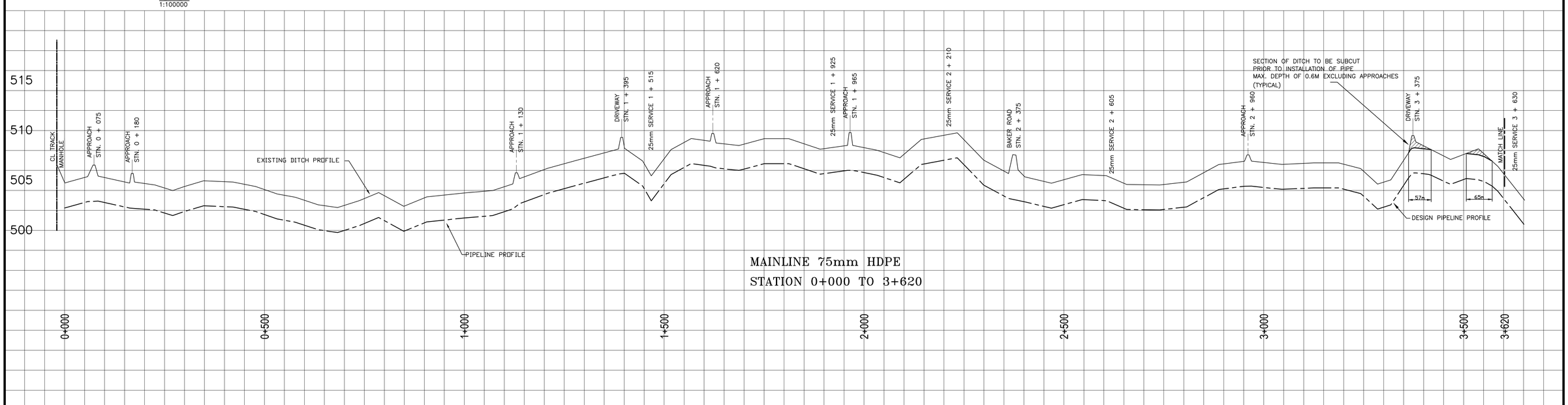

NOTES

CONTRACTOR: GLEN TALL TRENCHING LTD.
MATERIALS: DR17 HDPE PIPE

DATE	REVISION
MAY 20, 2002	GENERAL REVISIONS FOR CONSTRUCTION
AUG. 14, 2002	AS CONSTRUCTED

Association of Professional Engineers & Geoscientists of Saskatchewan
CERTIFICATE OF AUTHORIZATION
CATTERALL & WRIGHT
Number C848
Permission to Consult held by:
Discipline Sk. Reg. No. Signature
CIVIL

PROFESSIONAL ENGINEER
N. L. McLEOD
MEMBER 4394
YR. MN. DAY
SASKATCHEWAN

CATTERALL & WRIGHT
CONSULTING ENGINEERS
1221 - 8th Street East
SASKATOON SK S7H 0S5
Tel: (306) 343-7280, Fax: (306) 956-3199

PROJECT: SOUTHEAST CORMAN PARK
RURAL WATER CORPORATION
WATER DISTRIBUTION PIPELINES

SHEET TITLE: MAINLINE STN. 0+000 TO 3+620

SCALE	HOR 1:5000 VERT 1:200
DRAWN	D.J.G., G.R.M.
DESIGNED	W.J.W.
CHECKED	W.J.W.
DATE	APRIL 2002
SHEET	1 OF 4
DRAWING NUMBER	228-101

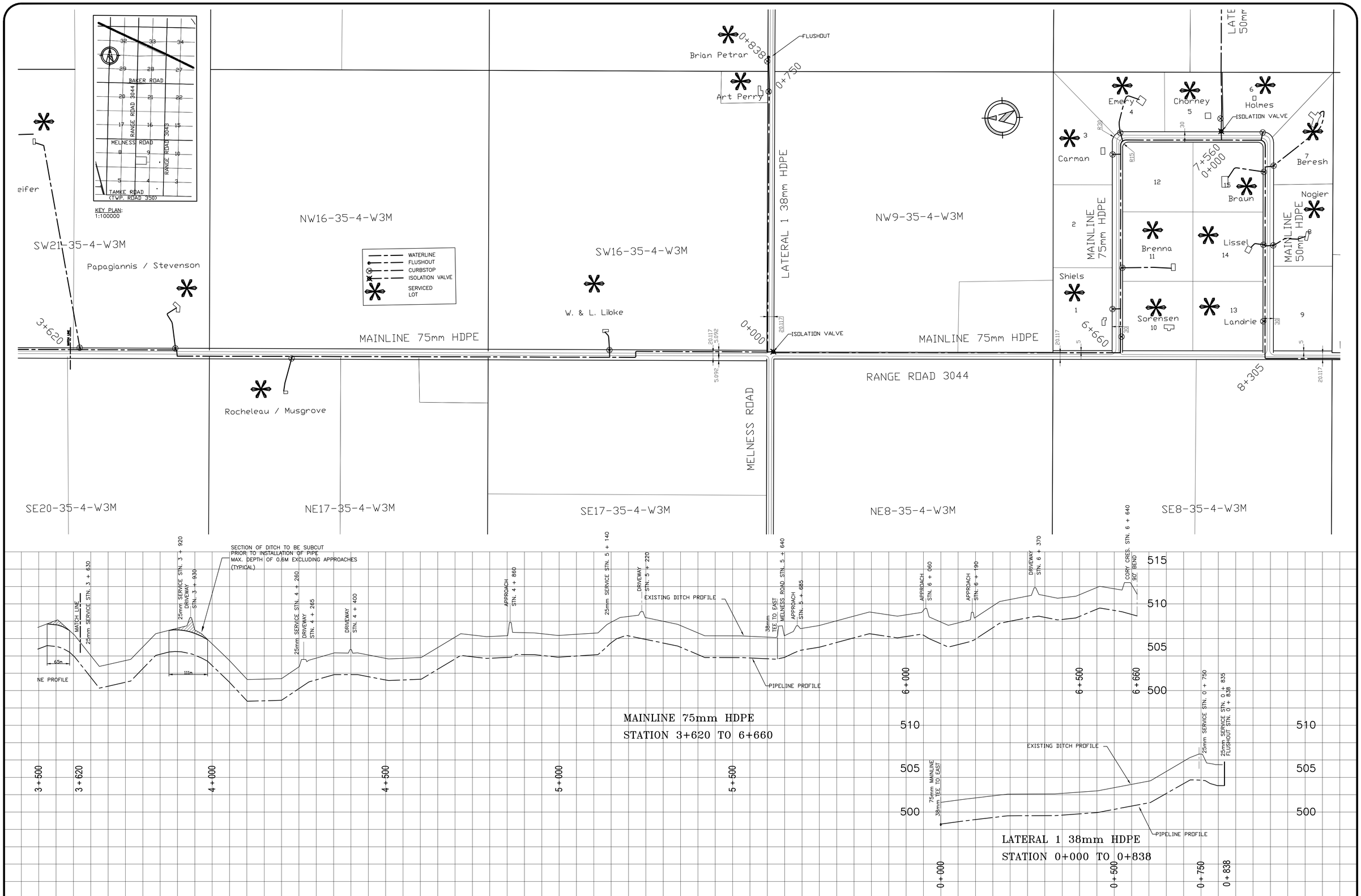

NOTES

CONTRACTOR: GLEN TALL TRENCHING LTD.
MATERIALS: DR17 HDPE PIPE

DATE	REVISION
MAY 20, 2002	GENERAL REVISIONS FOR CONSTRUCTION
AUG. 14, 2002	AS CONSTRUCTED

PROFESSIONAL ENGINEER
N. L. McLEOD
MEMBER 4394
YR. MN. DAY
SASKATCHEWAN

CATTERALL & WRIGHT
CONSULTING ENGINEERS
1221 - 8th Street East
SASKATOON SK S7H 0S5
Tel: (306) 343-7280, Fax: (306) 956-3199

PROJECT: SOUTHEAST CORMAN PARK
RURAL WATER CORPORATION
WATER DISTRIBUTION PIPELINES

SHEET TITLE: MAINLINE STN. 3 + 620 TO STN. 6 + 660
LATERAL 1

SCALE	HOR 1:5000 VERT 1:200
DRAWN	D.J.G., G.R.M.
DESIGNED	W.J.W.
CHECKED	W.J.W.
DATE	APRIL 2002
SHEET	2 OF 4
DRAWING NUMBER	228-102

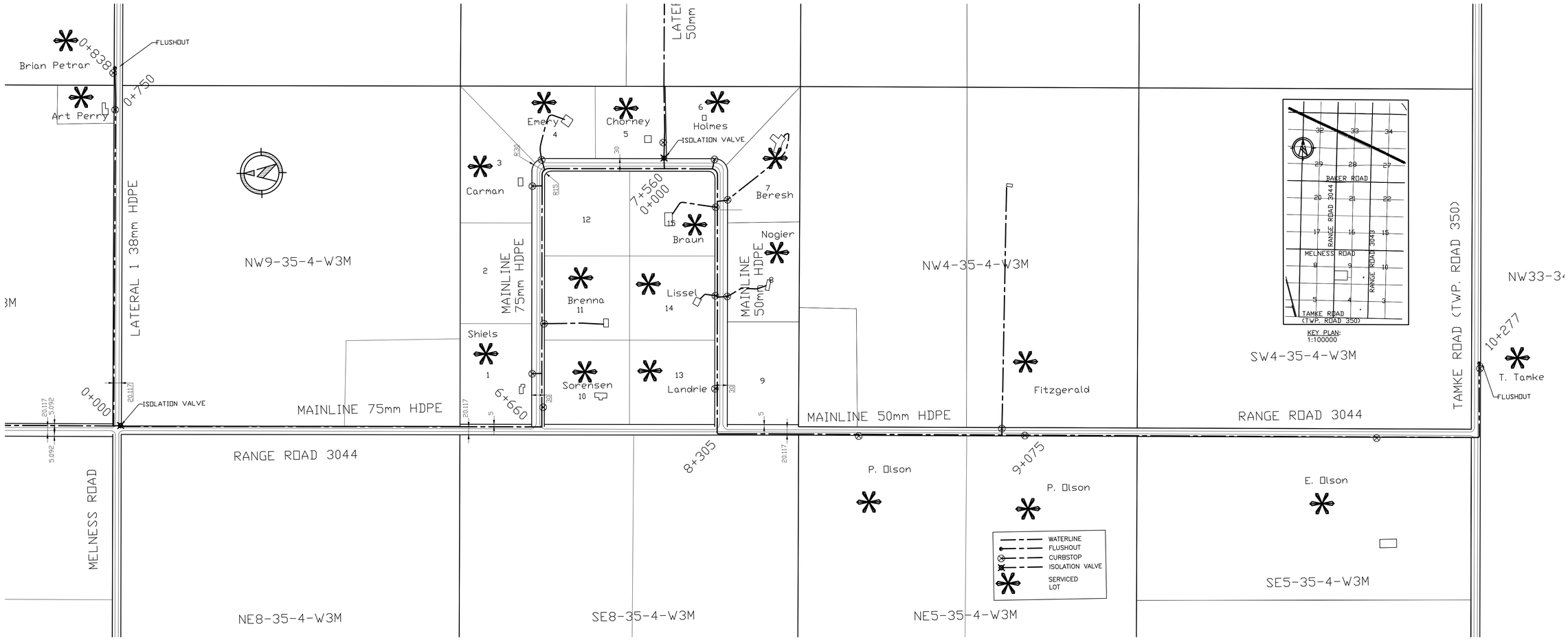

NOTES

CONTRACTOR: GLEN TALL TRENCHING LTD.
MATERIALS: DR17 HDPE PIPE

DATE	REVISION
MAY 20, 2002	GENERAL REVISIONS FOR CONSTRUCTION
AUG. 14, 2002	AS CONSTRUCTED

PROFESSIONAL ENGINEER
N. L. McLEOD
MEMBER 4394
YR. MN. DAY
SASKATCHEWAN

CATTERALL & WRIGHT
CONSULTING ENGINEERS
1221 - 8th Street East
SASKATOON SK S7H 0S5
Tel: (306) 343-7280, Fax: (306) 956-3199

PROJECT: SOUTHEAST CORMAN PARK
RURAL WATER CORPORATION
WATER DISTRIBUTION PIPELINES

SHEET TITLE: MAINLINE ST. 6 + 660 TO END

SCALE	HOR 1:5000 VERT 1:200
DRAWN	D.J.G., G.R.M.
DESIGNED	W.J.W.
CHECKED	W.J.W.
DATE	APRIL 2002
SHEET	3 OF 4
DRAWING NUMBER	228-103

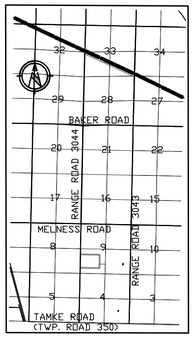

KEY PLAN:
1:100000

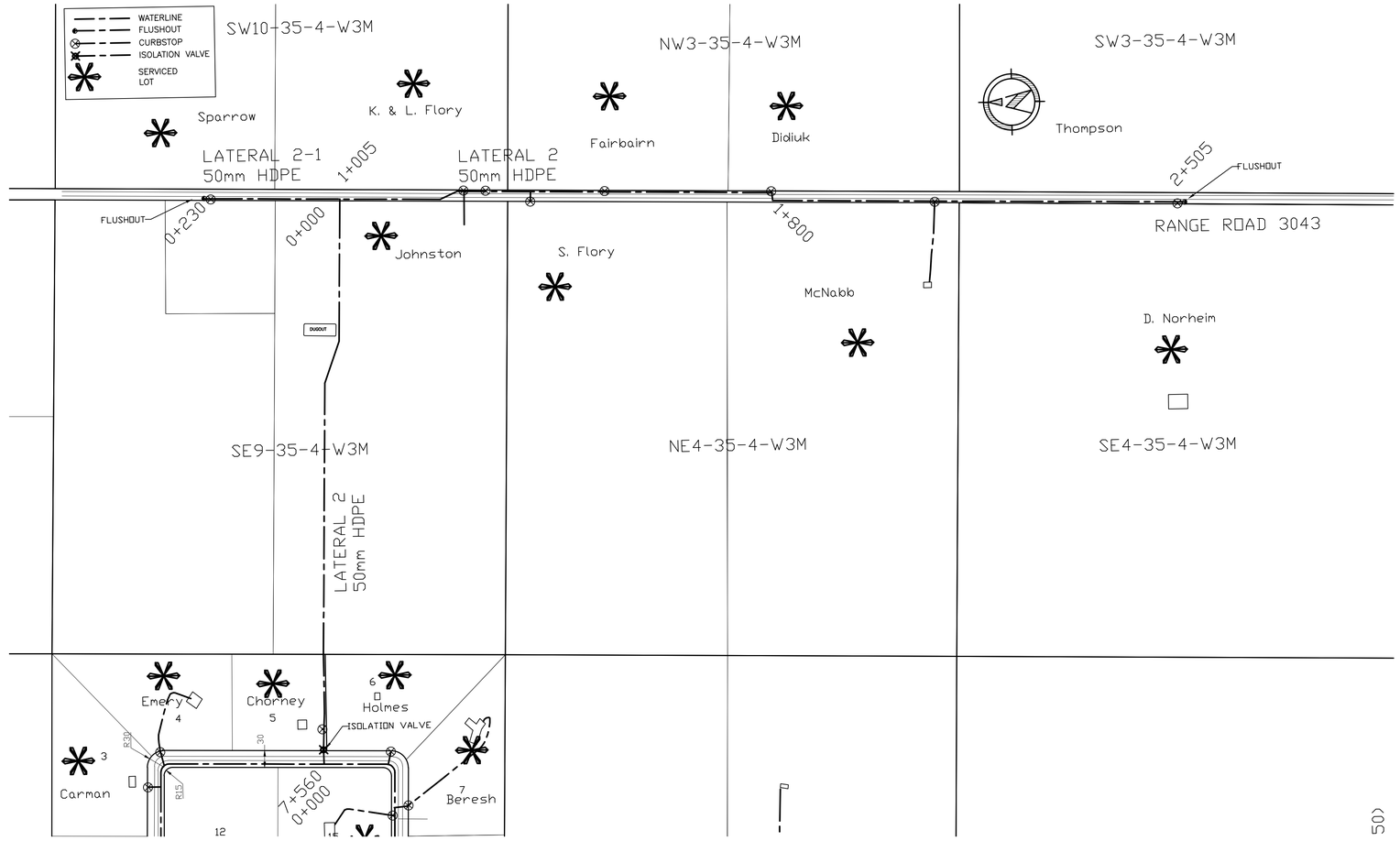

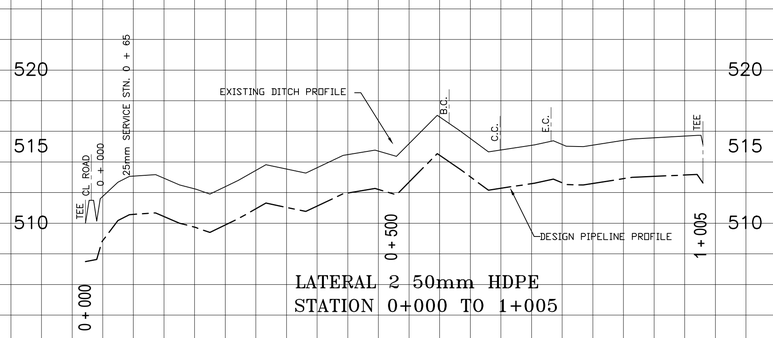

LATERAL 2 50mm HDPE
STATION 0+000 TO 1+005

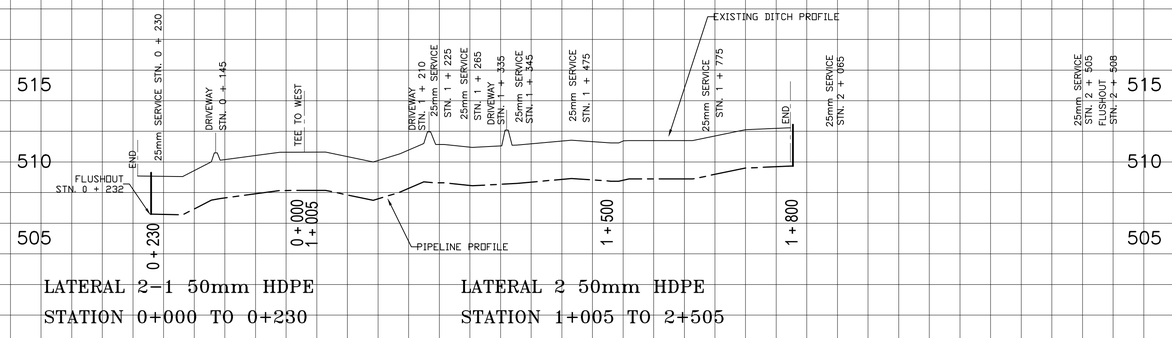

LATERAL 2-1 50mm HDPE
STATION 0+000 TO 0+230

LATERAL 2 50mm HDPE
STATION 1+005 TO 2+505

NOTES

CONTRACTOR: GLEN TALL TRENCHING LTD.
MATERIALS: DR17 HDPE PIPE

DATE	REVISION
MAY 20, 2002	GENERAL REVISIONS FOR CONSTRUCTION
AUG. 14, 2002	AS CONSTRUCTED

PROFESSIONAL ENGINEER
N. L. McLEOD
MEMBER 4394
YR. MN. DAY
SASKATCHEWAN

CATTERALL & WRIGHT
CONSULTING ENGINEERS
1221 - 8th Street East
SASKATOON SK S7H 0S5
Tel: (306) 343-7280, Fax: (306) 956-3199

PROJECT: SOUTHEAST CORMAN PARK
RURAL WATER CORPORATION
WATER DISTRIBUTION PIPELINES

SHEET TITLE: LATERAL 2
LATERAL 2-1

SCALE	HOR 1:5000 VERT 1:200
DRAWN	D.J.G., G.R.M.
DESIGNED	W.J.W.
CHECKED	W.J.W.
DATE	APRIL 2002
SHEET	4 OF 4
DRAWING NUMBER	228-104

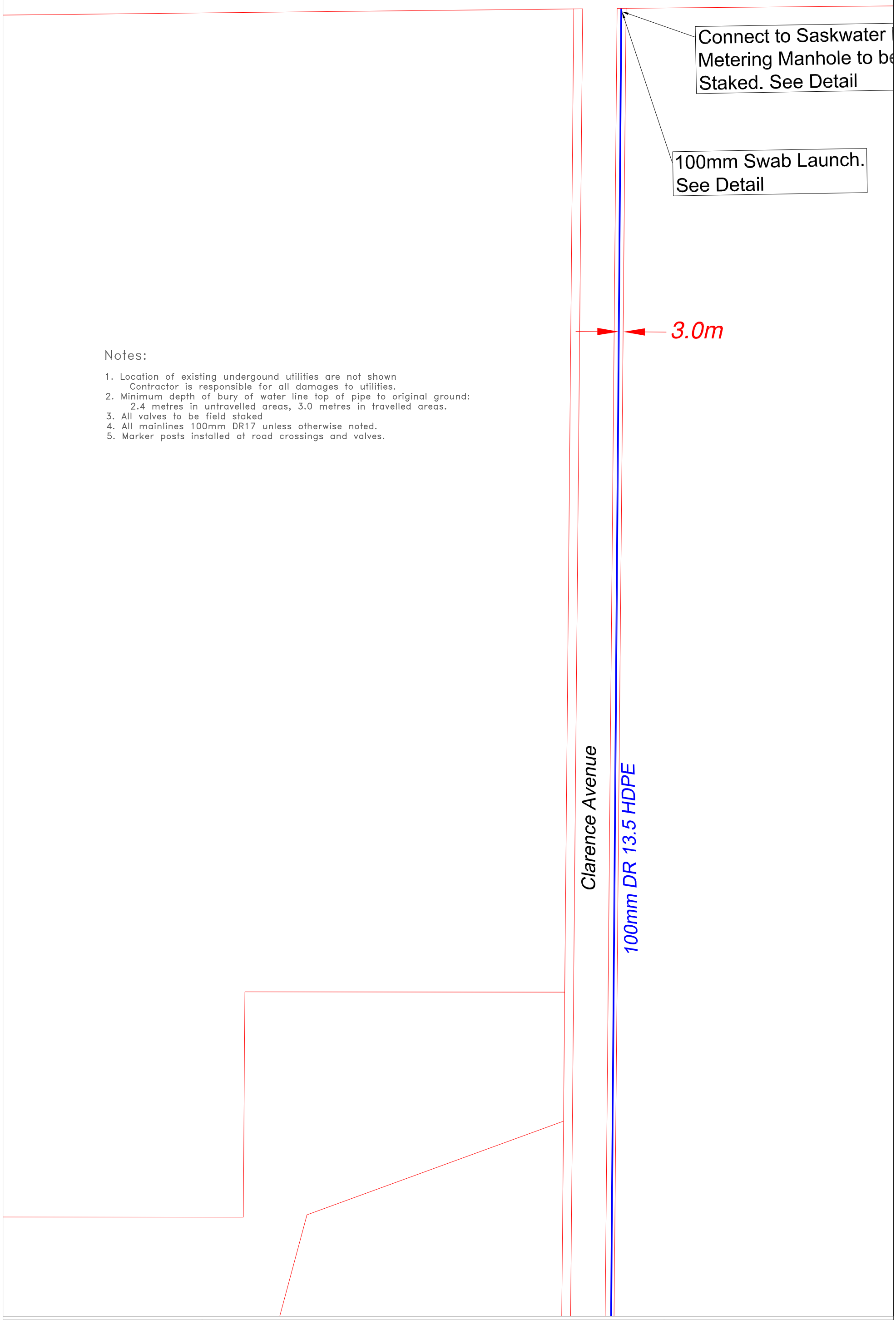

Notes:

1. Location of existing undergound utilities are not shown
   Contractor is responsible for all damages to utilities.
2. Minimum depth of bury of water line top of pipe to original ground:
   2.4 metres in untravelled areas, 3.0 metres in travelled areas.
3. All valves to be field staked
4. All mainlines 100mm DR17 unless otherwise noted.
5. Marker posts installed at road crossings and valves.

Sources	Revisions					Drawing Information			Edgemont Estates Phase 1 Water Supply Pipeline
	Date	By	No.	Description	Approved	Designed: Doug Thompson	Drawn: PFU	Checked:	
	03/06/19	PFU	0	Regulatory Reviews	DT	Drawing Name: Phase1Mar01_19	Scale: 1:2000	Date: 03/06/19	Tamarack Professional Services Ltd.
						Contractor: TBA			Revision:
Coordinates are UTM NAD83 Zone 13						DESTROY ALL PRINTS BEARING EARLIER DATE AND/OR REVISION.			Design Drawing 2019 Design Drawing Sheet 2 of 6
									Drawing No. 002

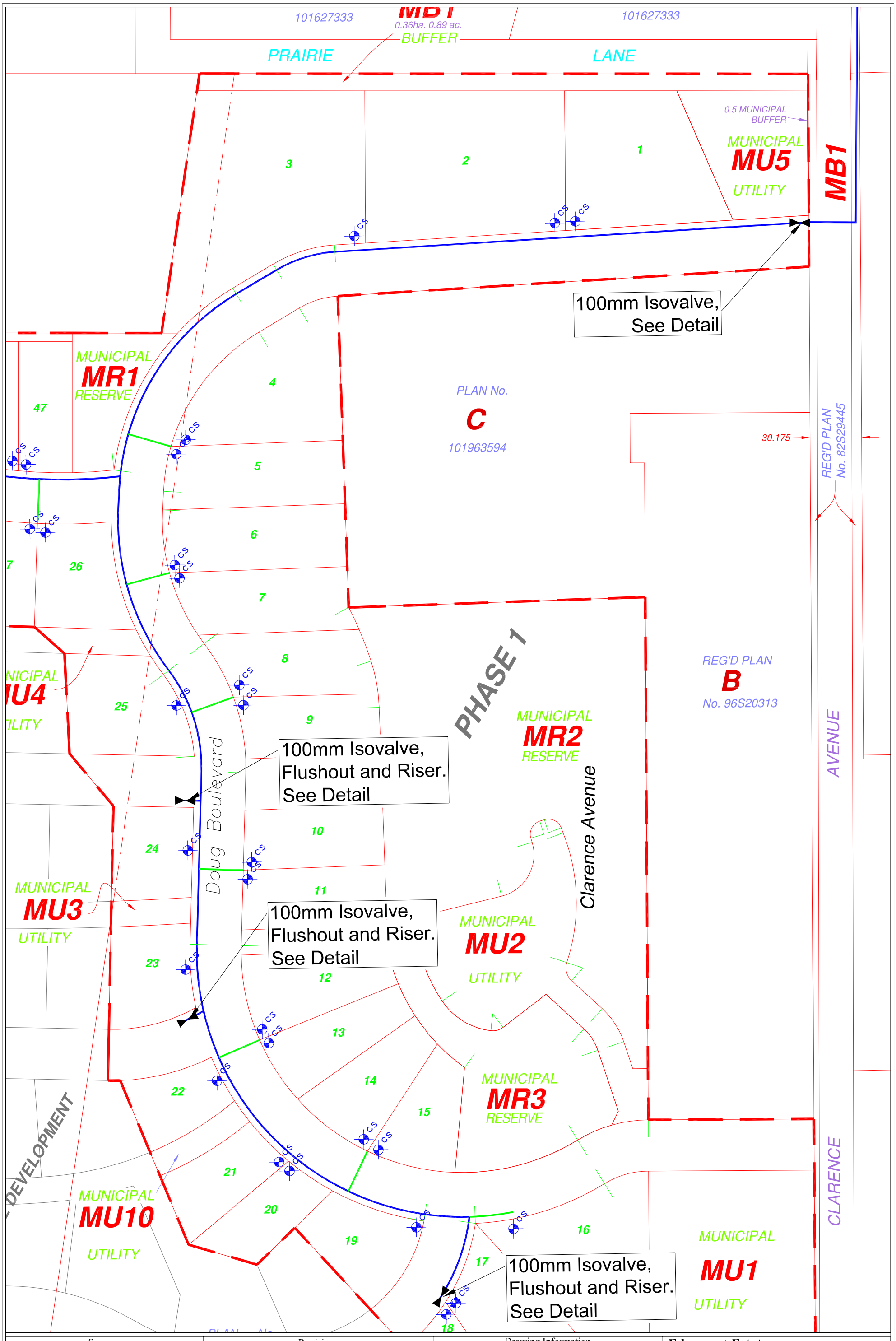

Sources	Revisions					Drawing Information			Edgemont Estates Phase1 Water Supply Pipeline
	Date	By	No.	Description	Approved	Designed: Doug Thompson	Drawn: PFU	Checked:	
						Drawing Name: Phase1Mar01_19	Scale: 1:2000	Date: 03/06/19	Tamarack Professional Services Ltd. — Revision:
						Contractor: TBA			
Coordinates are UTM NAD83 Zone 13						DESTROY ALL PRINTS BEARING EARLIER DATE AND/OR REVISION.			Design Drawing 2019 Design Drawing Sheet 3 of 6 — Drawing No. 003

HIDDEN RIDGE COUNTRY ESTATES
PROPOSED ROUTE
WATER SUPPLY PIPELINE

OWNERS:
EAGLE RISE DEVELOPMENTS
TOWER HILL RANCH LTD
DESIGN INTERVENTION INC.

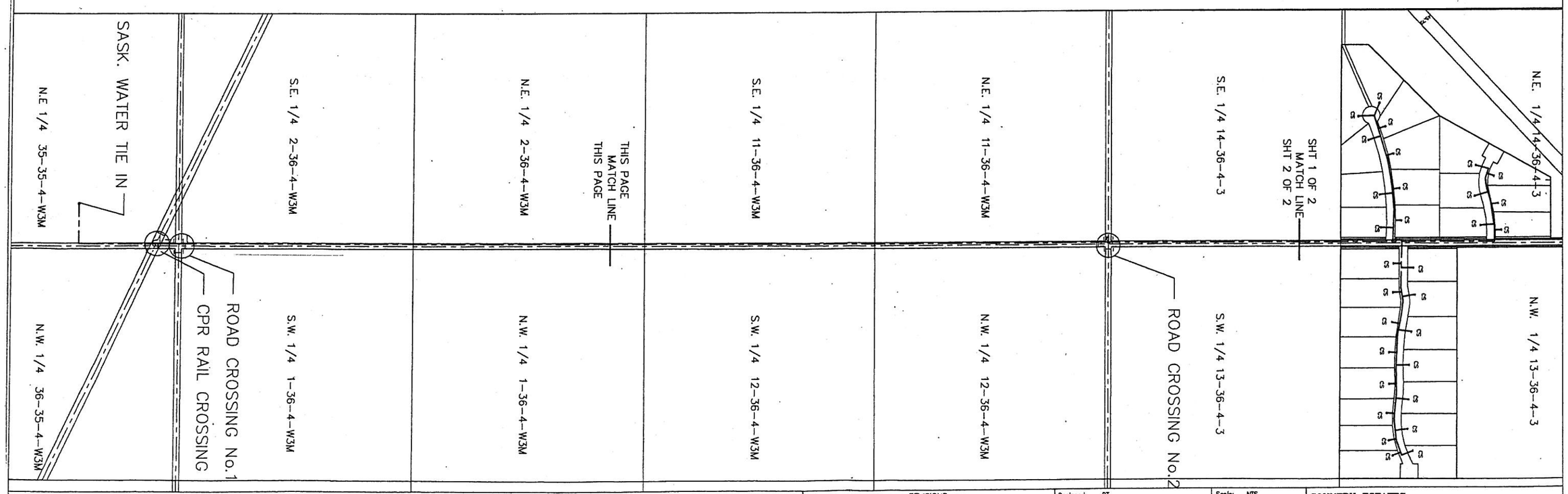

NOTE:
THE CONTRACTOR IS RESPONSIBLE FOR THE LOCATION AND PROTECTION OF ALL UNDERGROUND UTILITIES.

REVISIONS				
Date	By	No.	Description	Approved

NOT APPROVED FOR CONSTRUCTION UNLESS SIGNED AND DATED.
DESTROY ALL PRINTS BEARING EARLIER DATE AND/OR REVISION.

Designed: DT		Scale: NTS
Drawn: CJM	Checked: DT	Date: 03/21/05
DRAWING STATUS		
Issued		Date
Preliminary:		
Approved for Construction:		

COUNTRY ESTATES
WATER SUPPLY PIPELINE

TAMARACK
PROFESSIONAL SERVICES LTD

PROPOSED PIPLINE

Revision: A

Drawing No. 1

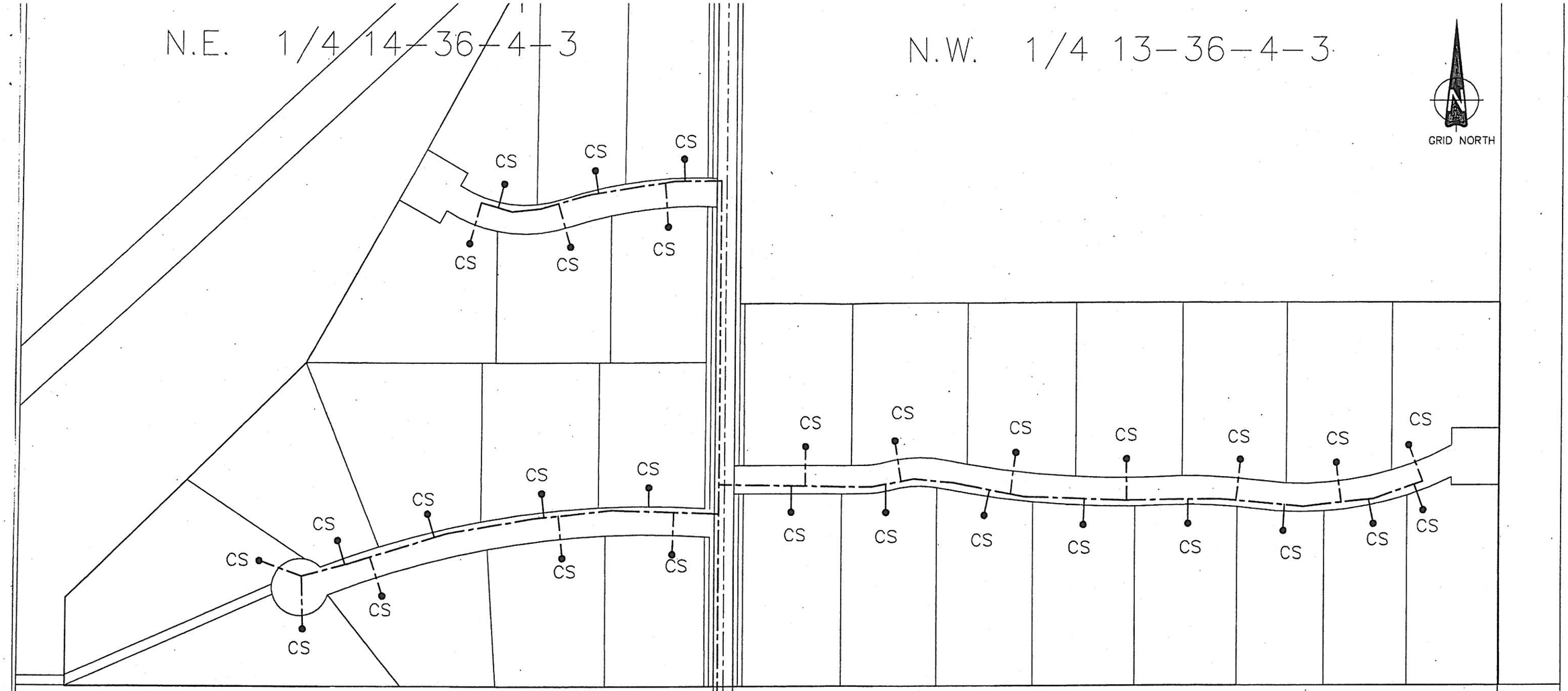

SHT 1 OF 2
MATCH LINE
SHT 2 OF 2

NOTE:
THE CONTRACTOR IS RESPONSIBLE FOR THE LOCATION AND PROTECTION OF ALL UNDERGROUND UTILITIES.

NOTE:
LOCATION OF CURBSTOPS IS APPROXIMATE
ALL CURBSTOPS TO BE LOCATED ON PROPERTY LINE

REVISIONS				
Date	By	No	Description	Approved

NOT APPROVED FOR CONSTRUCTION UNLESS SIGNED AND DATED.
DESTROY ALL PRINTS BEARING EARLIER DATE AND/OR REVISION.

Designed: DT | Scale: 1=4000
Drawn: CJM | Checked: DT | Date: 03/21/05

DRAWING STATUS	
Issued	Date
Preliminary:	
Approved for Construction:	

COUNTRY ESTATES
WATER SUPPLY PIPELINE

TAMARACK
PROFESSIONAL SERVICES LTD

PIPELINE ROUTE DRAWING
SHEET 1 OF 2

Revision: A
Drawing No. 2

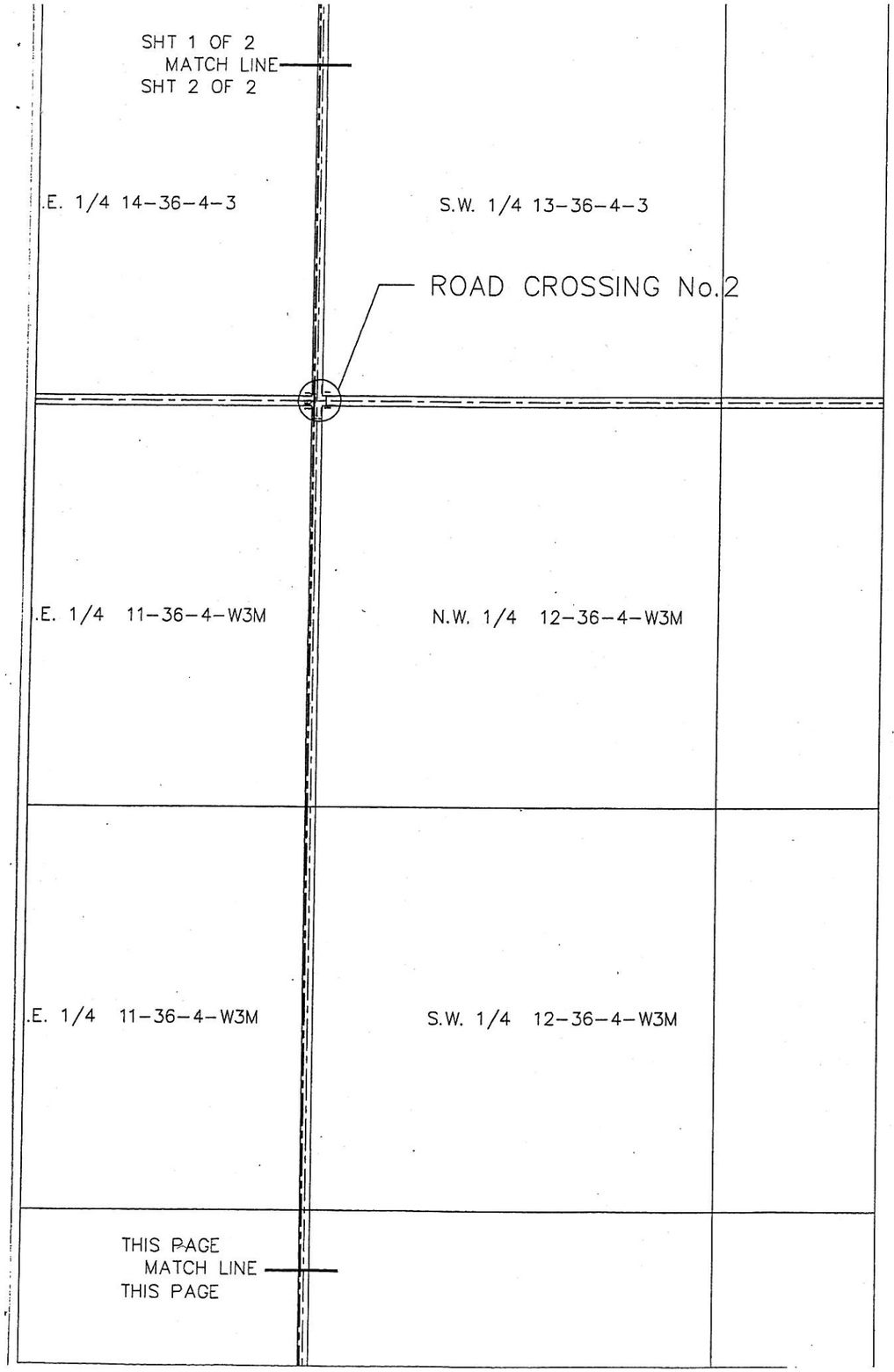

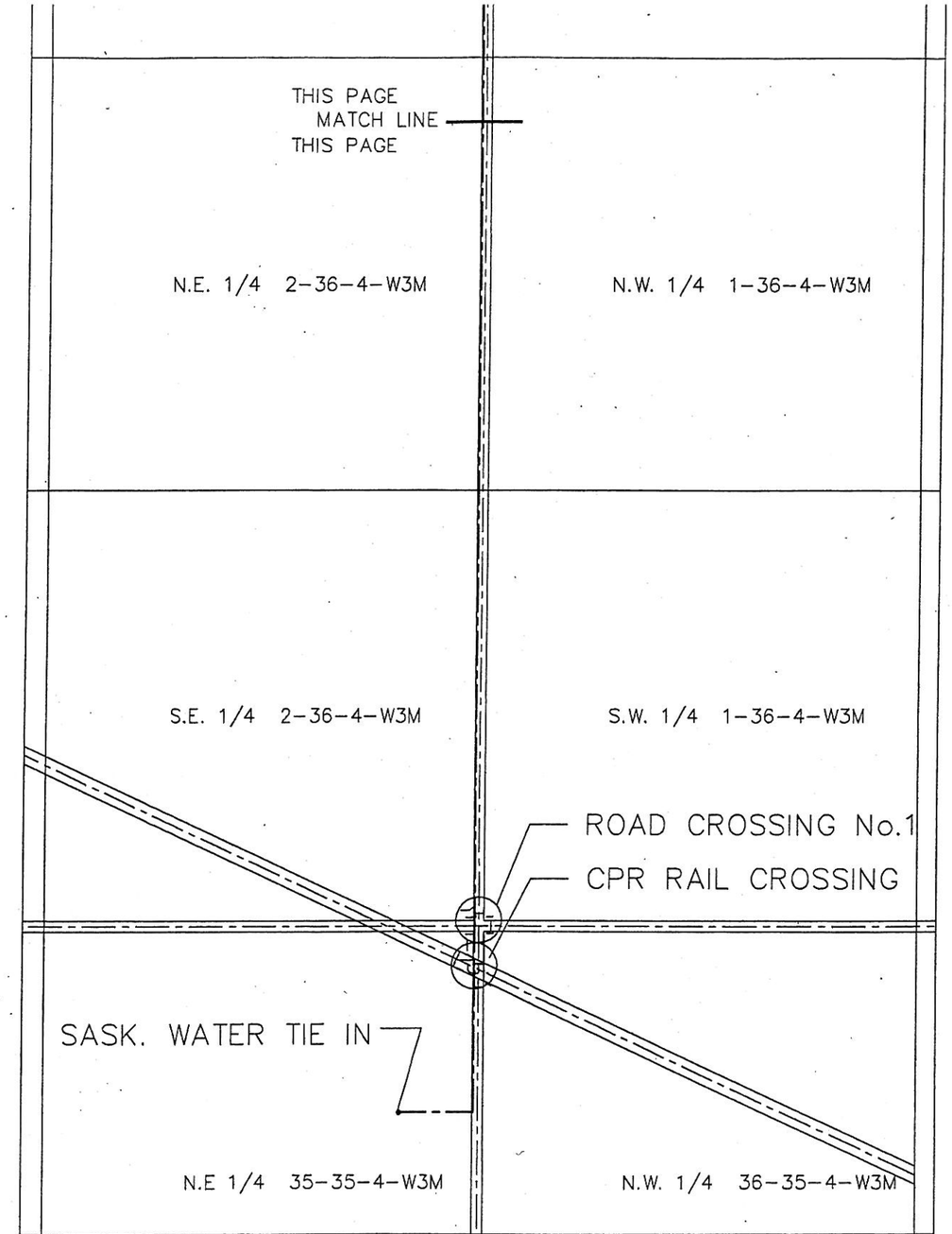

NOTE:
THE CONTRACTOR IS RESPONSIBLE FOR THE LOCATION AND PROTECTION OF ALL UNDERGROUND UTILITIES.

REVISIONS				
Date	By	No	Description	Approved

NOT APPROVED FOR CONSTRUCTION UNLESS SIGNED AND DATED. DESTROY ALL PRINTS BEARING EARLIER DATE AND/OR REVISION.

Designed: DT | Scale: 1=10000
Drawn: CJM | Checked: DT | Date: 03/21/05

DRAWING STATUS	
Issued	Date
Preliminary:	
Approved for Construction:	

COUNTRY ESTATES
WATER SUPPLY PIPELINE

TAMARACK
PROFESSIONAL SERVICES LTD

PIPELINE ROUTE DRAWING
SHEET 2 OF 2

Revision: A

Drawing No. 3

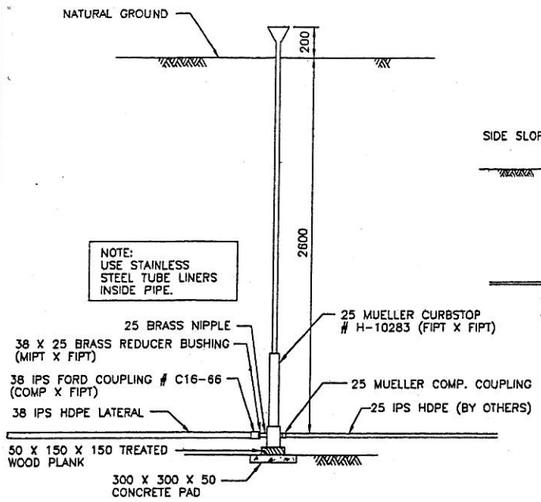

CURB STOP DETAIL

N.T.S.

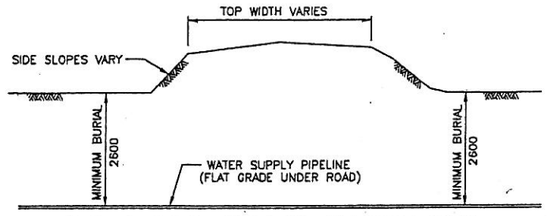

TYPICAL FIELD APPROACH, MUNICIPAL ROAD OR FARM ACCESS ROAD CROSSING

N.T.S.

NOTE: GRAVELLED MUNICIPAL ROAD CROSSINGS MUST BE AUGERED, BORED OR PUSHED.

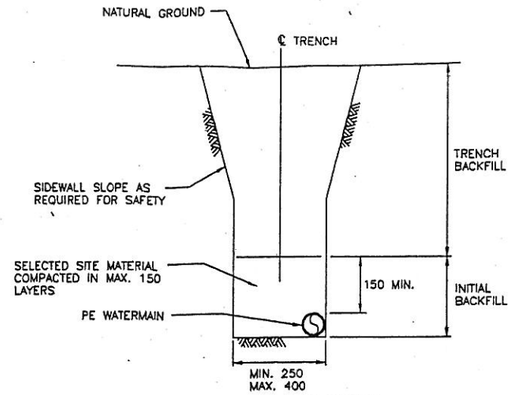

PE BEDDING DETAIL

N.T.S.

NOTE: ONLY REQUIRED FOR STONY SOILS.

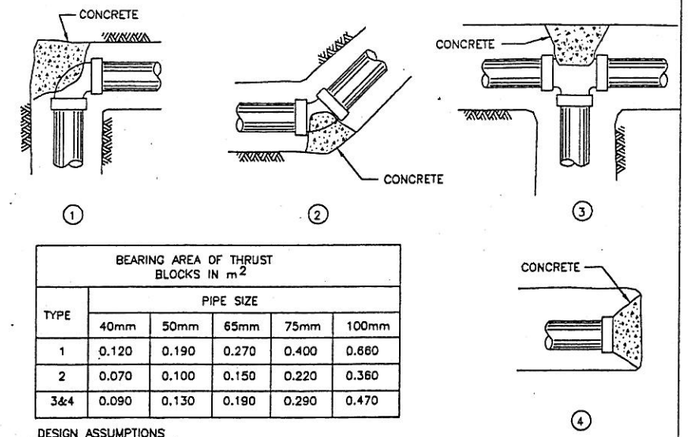

BEARING AREA OF THRUST BLOCKS IN m^2					
TYPE	PIPE SIZE				
	40mm	50mm	65mm	75mm	100mm
1	0.120	0.190	0.270	0.400	0.660
2	0.070	0.100	0.150	0.220	0.360
3&4	0.090	0.130	0.190	0.290	0.470

DESIGN ASSUMPTIONS

1. HYDRAULIC HEAD 1103.0 KPa AND ABOVE.
2. CONCRETE AREAS ARE FOR SOIL BEARING CAPACITIES OF 23.9 KPa.

THRUST BLOCK DETAILS (FOR PVC PIPE)

N.T.S.

ONLY REQUIRED ON PE PIPE AT VERTICAL TRANSITION OR PE / PVC JOINTS.

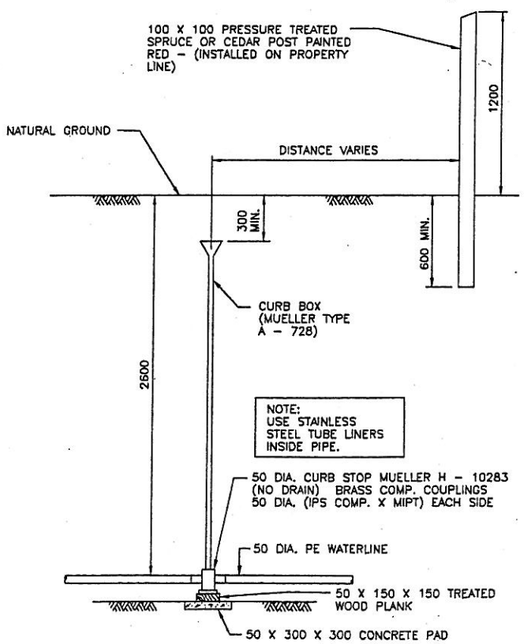

ISOLATION VALVE (50mm DIA. VALVES)

N.T.S.

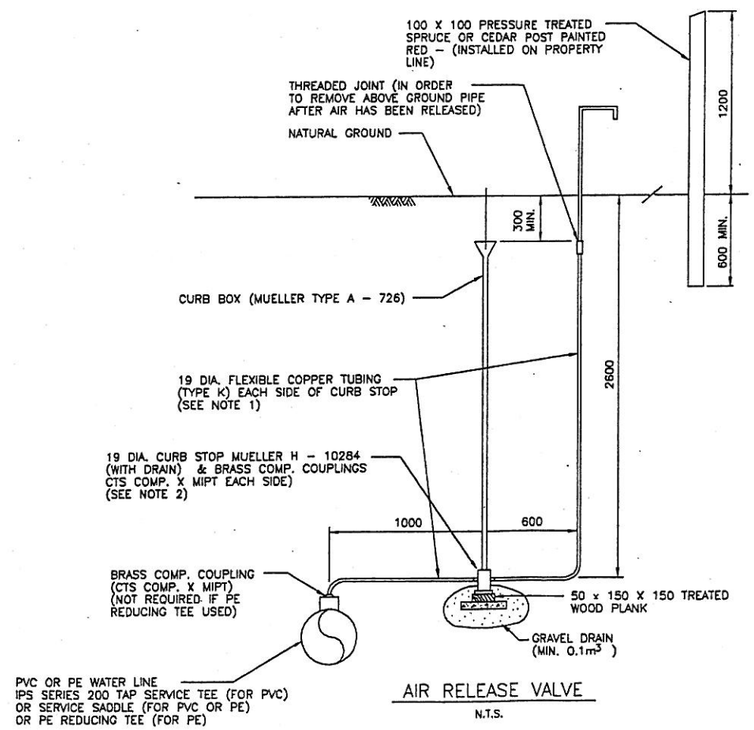

AIR RELEASE VALVE

N.T.S.

NOTES:

1. IF PE REDUCING TEE ON WATER LINE, USE PE PIPE BETWEEN WATER LINE AND VALVE.
2. IF PE REDUCING TEE, USE IPS X COMP. ON U/S SIDE AND CTS X COMP. ON D/S SIDE OF CURBSTOP.

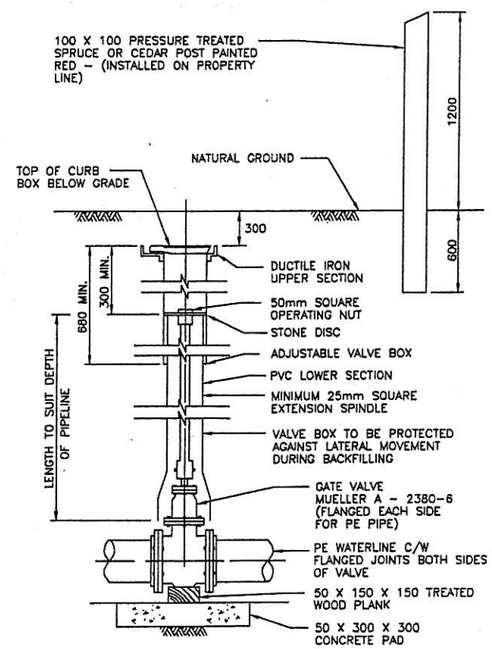

ISOLATION VALVE (75mm DIA. AND LARGER)

N.T.S.

REVISIONS				
Date	By	No	Description	Approved

NOT APPROVED FOR CONSTRUCTION UNLESS SIGNED AND DATED. DESTROY ALL PRINTS BEARING EARLIER DATE AND/OR REVISION.

Designed: DT		Scale: NTS
Drawn: CJM	Checked: DT	Date: 03/21/05
DRAWING STATUS		
Issued		Date
Preliminary:		
Approved for Construction:		

COUNTRY ESTATES
WATER SUPPLY PIPELINE

TAMARACK PROFESSIONAL SERVICES LTD

PROPOSED PIPELINE ROUTE
TYPICAL DETAILS

Revision: A

Drawing No. 4

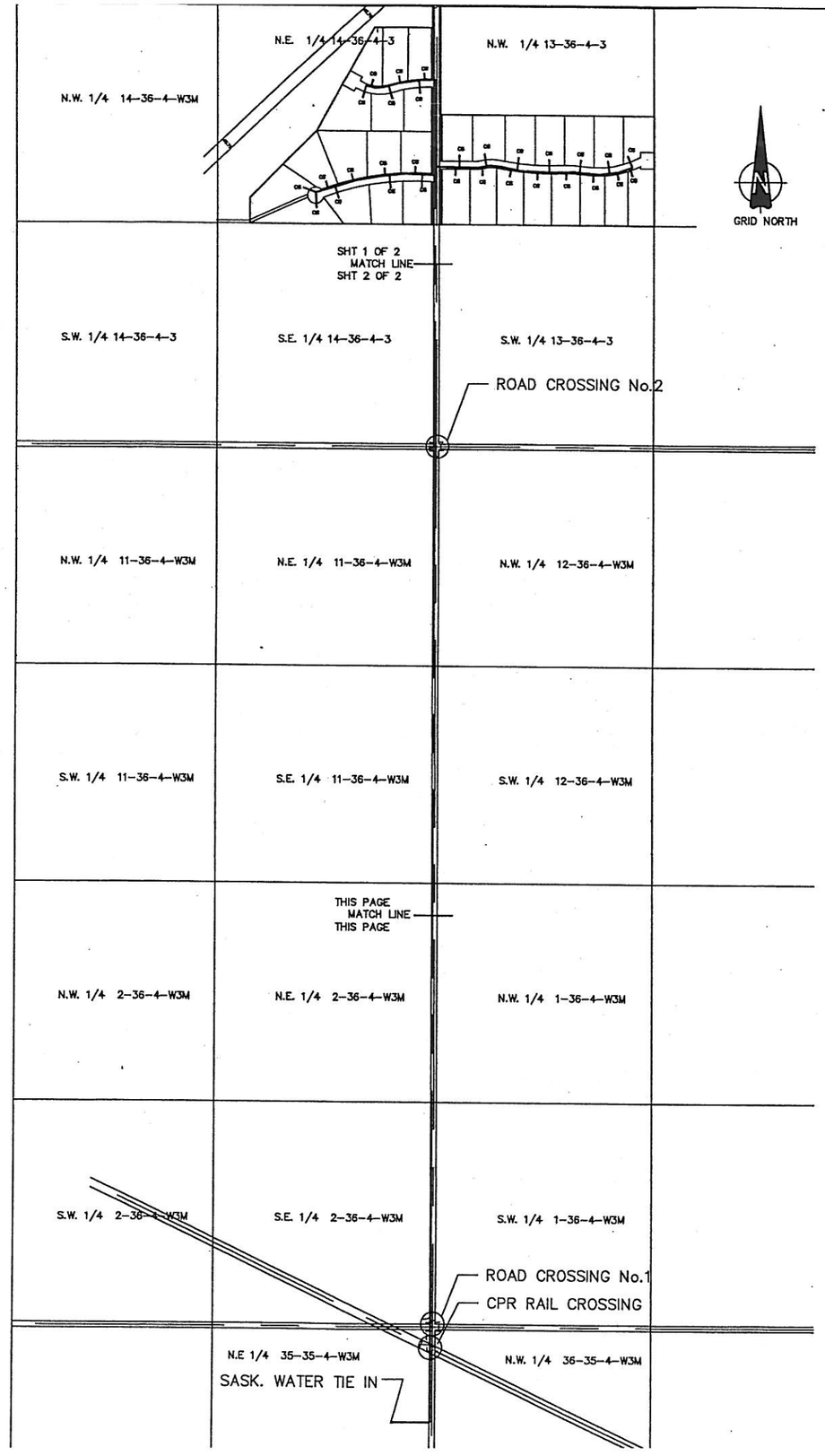

C.P. RAILWAY CROSSING DRAWIN

NTS

HIDDEN RIDGE COUNTRY ESTATES

PROPOSED ROUTE

WATER SUPPLY PIPELINE

Railway Mileage & Subdivision — SUTHERLAND SUB @ 101.170 MILES
Municipal Descriptions of Adjoining Properties — N.E. & S.W. ¼ SEC. 36-36-4-W3M
Name of Pipeline Owner — EAGLE RISE DEVELOPEMNTS,
TOWER HILL RANCH LTD, DESIGN INTERVENTION INC.

	Carrier Pipe	Casing Pipe
Contents to be handled	POTABLE WATER	N/A
Outside diameter	100mm DIA.	150mm DIA.
Pipe material	POLYETHELENE	STEEL
Specification and grade	DR17	SCHED 40
Wall thickness	6.7mm	6.39mm
Maximum operating pressure	100 PSI	N/A
Maximum surge & test pressure	150 PSI	N/A
Maximum operating temperature	10 C	N/A
Minimum operating temperature	2 C	N/A
Type of joint	FUSED	FUSED
Coating	HDPE	NIL
Method of installation	BORE/AUGER	BORE/BORE/AUGER

Vents: Number...NIL Size..... Height above ground .....
Seals:..... Both ends..... Type.....
Bury: Base of rail to top of casing.....2.6 m.
Bury: (Not beneath tracks).....2.4 m.
Bury: (Roadway ditches).....2.4 m.
Extent of casing measured perpendicular to centre-line of track.....15.24 m.
Type,size and spading of insulators or supports.....N/A
Distance C.L. track to face of jacking/receiving pits.....15.24 m.
Bury: Base of rail to bottom jacking/receiving pits.....2.6 m.

Cathodic Protection: yes..... no...X.....
Geotechnical boreholes: yes..... no....X....

Soil type .....GLAICAL TILL
Base of rail to ground water .....NO INFORMATION..m.

Plans shall be sealed and signed by a professional engineer, competent in this field, registered in the province or territory in which the pipeline crossing is located.

The execution of work on railway rights-of-way, including the supporting of tracks, shall be subject to the inspection and direction of the Engineer.

Where laws or orders of public authority prescribe a higher degree of protection than specified herein, then the higher degree of protection so prescribed shall be deemed a part of this standard.

PROFESSIONAL ENGINEER
D.P. THOMPSON
SASKATOON
May 26/05
SASKATCHEWAN

ASSOCIATION OF PROFESSIONAL ENGINEERS OF SASKATCHEWAN
CERTIFICATE OF AUTHORIZATION
TAMARACK PROFESSIONAL SERVICES LTD.
Number 813
PERMISSION TO CONSULT HELD BY:

DISCIPLINE	SASK. REG. No.	SIGNATURE
Civil	5735	D. Thompson

REVISIONS				
Date	By	No.	Description	Approved

NOT APPROVED FOR CONSTRUCTION UNLESS SIGNED AND DATED

Designed: DT — Scale: NTS
Drawn: CJM — Checked: DT — Date: 03/21/05

DRAWING STATUS	
Issued	Date
Preliminary:	
Approved for:	

COUNTRY ESTATES
WATER SUPPLY PIPELINE

TAMARACK PROFESSIONAL SERVICES LTD

LOCATION DRAWING

Revision: A

Drawing No.

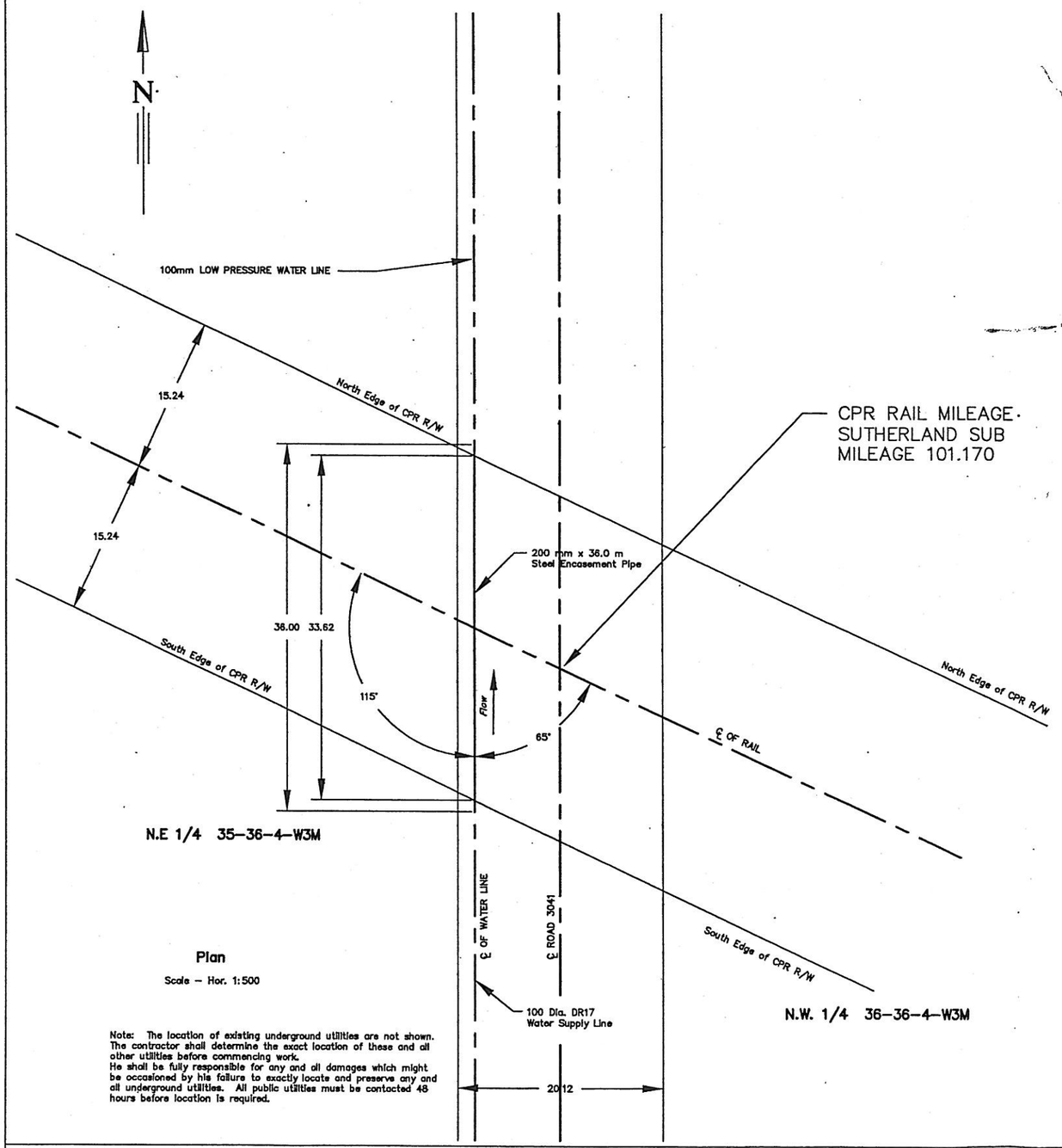

Plan

Scale – Hor. 1:500

Note: The location of existing underground utilities are not shown. The contractor shall determine the exact location of these and all other utilities before commencing work.
He shall be fully responsible for any and all damages which might be occasioned by his failure to exactly locate and preserve any and all underground utilities. All public utilities must be contacted 48 hours before location is required.

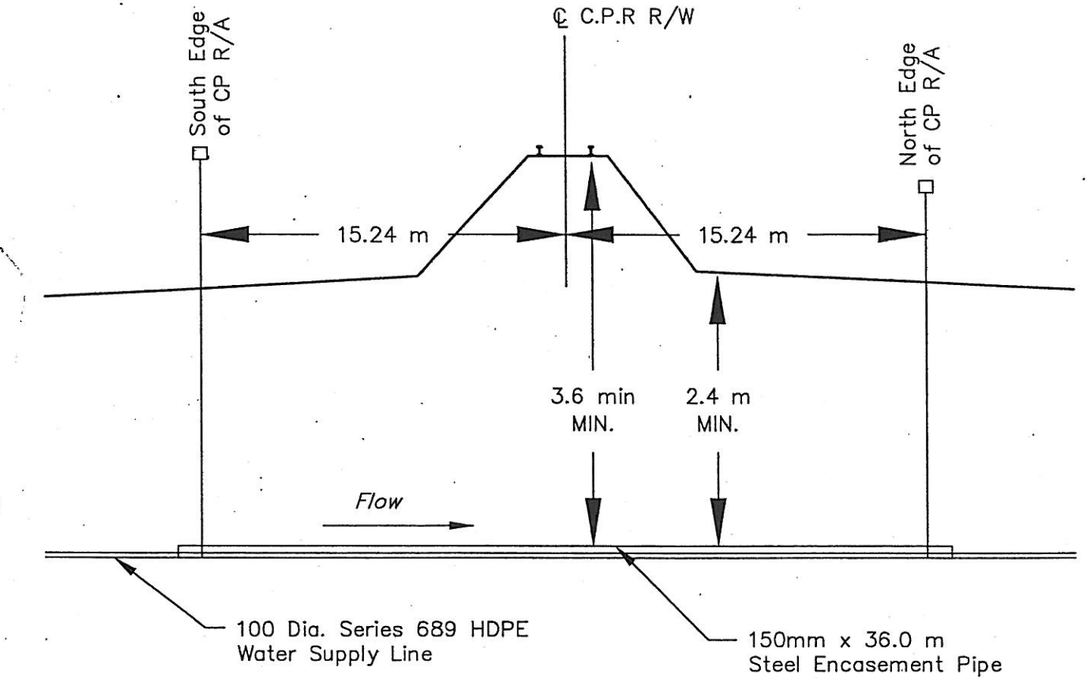

Profile of CPR Railroad Crossing in N.E 1/4 35–36–4–W3M

Scale – Hor. 1:250, VERT 1:10

Railroad Crossing Notes:

- Carrier pipe to be installed by Boring or augering.
- Steel encasement pipe to be 50 mm dia. larger than carrier pipe and shall have a minimum of 6.39 mm wall thickness with a minimum yield strength of 241 mpa.
- Carrier pipe to be 689 Kpa Polyethylene pipe (as shown). Carrier pipe not to be supported in casing pipe. Reference standards CSA 8137.0–86, CSA 8137.1–89, ASTM 03035–89a, ASTM 0714–88, ASTM 01248–84, and ASTM 03350–84. Reference standards CSA 8137.3–m90, ASTM 01784–90.
- Pipeline pressure not to exceed 689 Kpa.
- The pipeline crossing to be at right angles to the track throughout the full width of the right of way.
- Top of casing pipe to be a minimum of 2.60 m below the ditch or natural ground and a minimum of 2.5 m below base of rail.
- Pipeline to be constructed and maintained in accordance with Transport Canada TCE–10 Standards Respecting pipelines crossing Railways.
- Crossing to be marked by 100 mm x 100 mm white post, at east end of crossing and either side of CNR R/A.

REVISIONS				
Date	By	No	Description	Approved

NOT APPROVED FOR CONSTRUCTION UNLESS SIGNED AND DATED.

Designed: DT		Scale: AS SHOWN
Drawn: CJM	Checked: DT	Date: 03/21/05
DRAWING STATUS		
Issued		Date
Preliminary:		
Approved for		

COUNTRY ESTATES
WATER SUPPLY PIPELINE

TAMARACK
PROFESSIONAL SERVICES LTD

CPR RAIL CROSSING

Revision: A

Drawing No. CPR–1

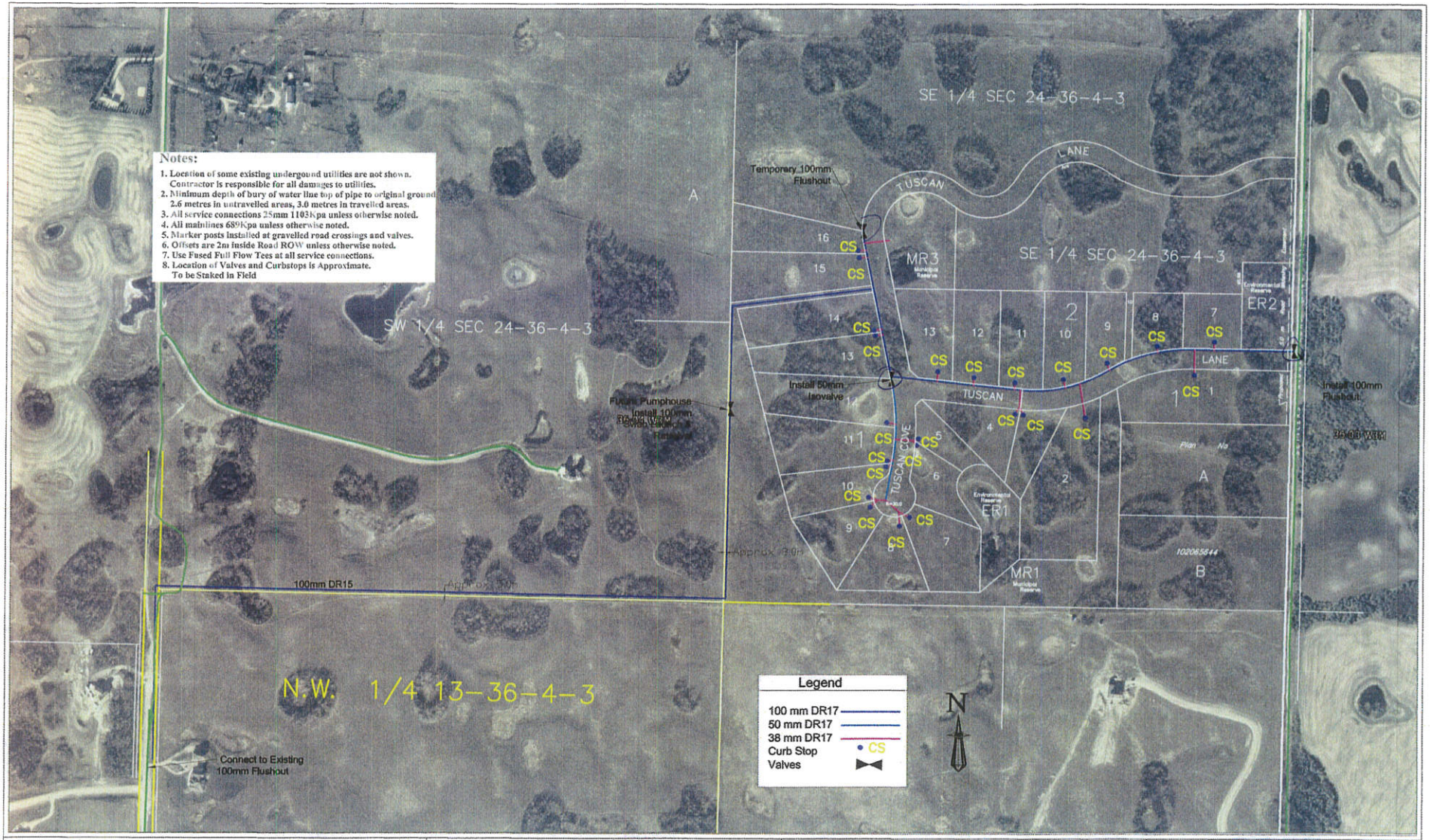

Subdivision boundaries from drawing by Webb Surveyes Raster images from Google Earth

Revisions

Date	By	No.	Description	Approved

Drawing Information

Designed: Doug Thompson	Drawn: PFU	Checked:
Drawing Name: TuscanRidge	Scale: 1:5000	Date: 06/01/15
Contractor: TBA		

DESTROY ALL PRINTS BEARING EARLIER DATE AND/OR REVISION.

Lost River Water Corporation
2015 Tuscan Ridge Extension

Tamarack Professional Services Ltd.
306-955-5191

2015 Tender Drawing
Sheet 1 of 2

Revision:

Drawing No.
15001

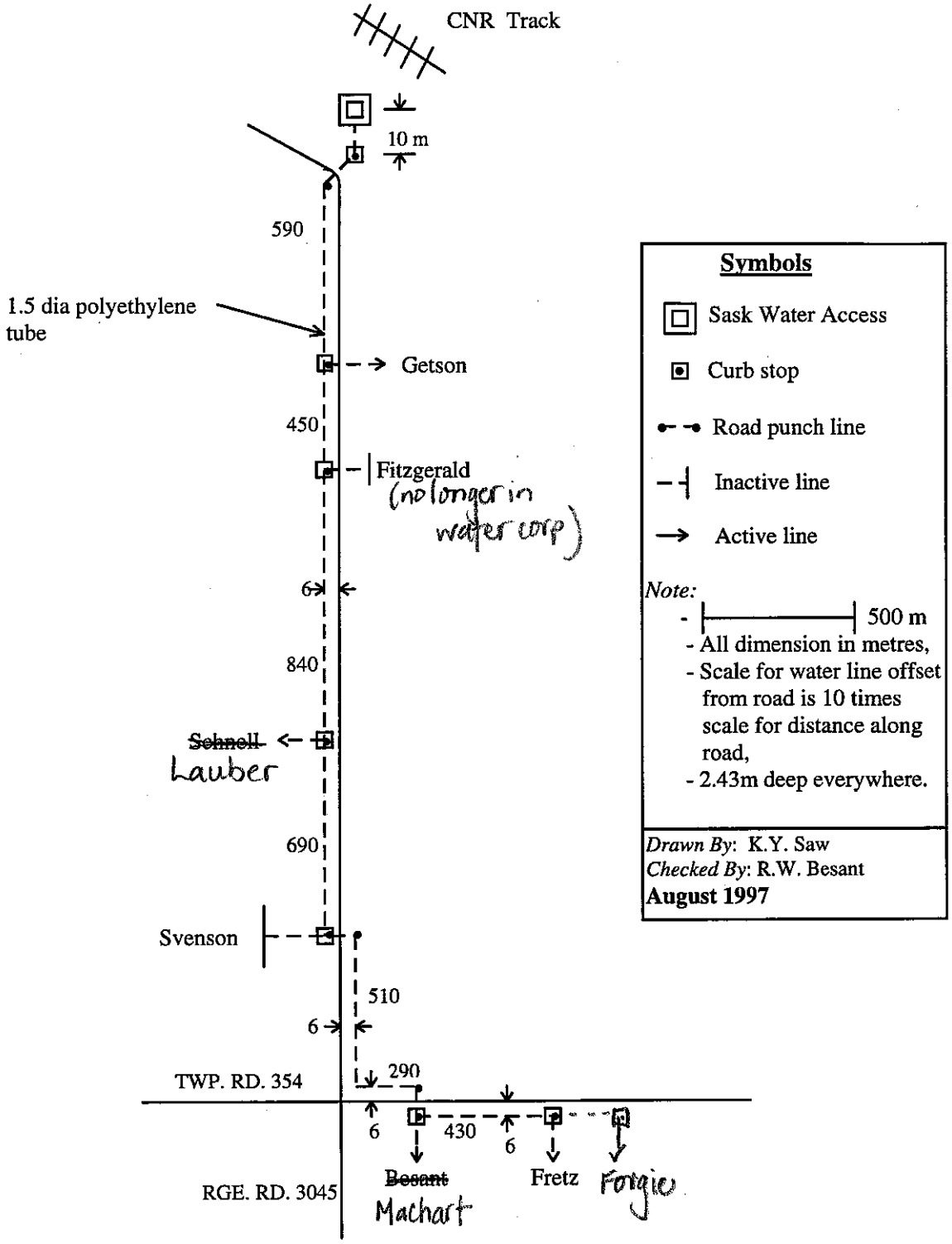

Plan of the water line for 3045 Range Road South Water Corp. Inc., Corman Park RM. 344.

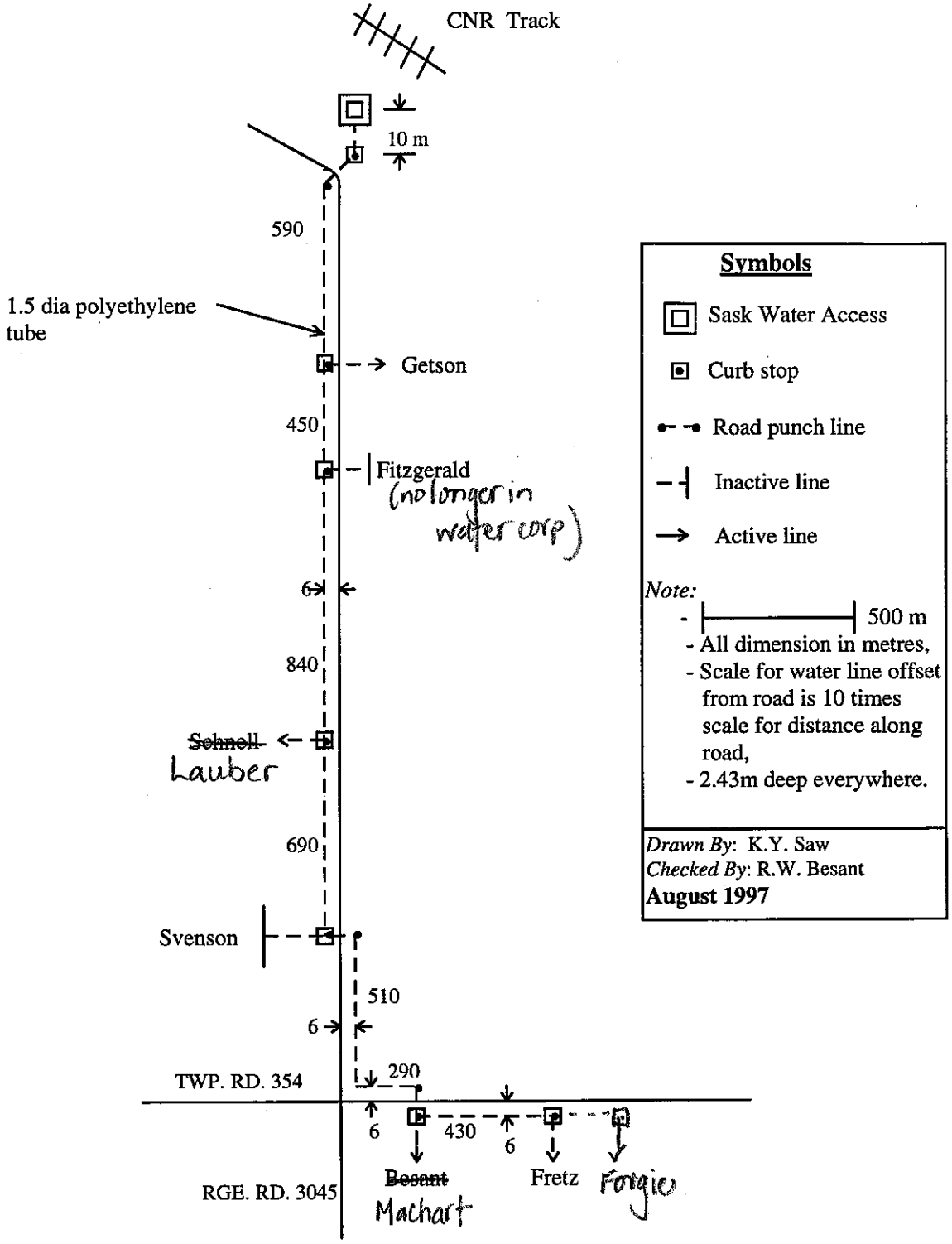

Plan of the water line for 3045 Range Road South Water Corp. Inc., Corman Park RM. 344.

NOTE:
THE CONTRACTOR IS RESPONSIBLE FOR THE LOCATION AND PROTECTION OF ALL UNDERGROUND UTILITIES. CONTACT ALL UTILITY COMPANIES 48 HOURS IN ADVANCE FOR LINE LOCATES.

THE LEGAL FABRIC LOCATION ON THIS DRAWING IS APPROXIMATE AND IS USED FOR ILLUSTRATION PURPOSE ONLY.

ALL CONSTRUCTION WITHIN ROAD ALLOWANCE U.N.O.

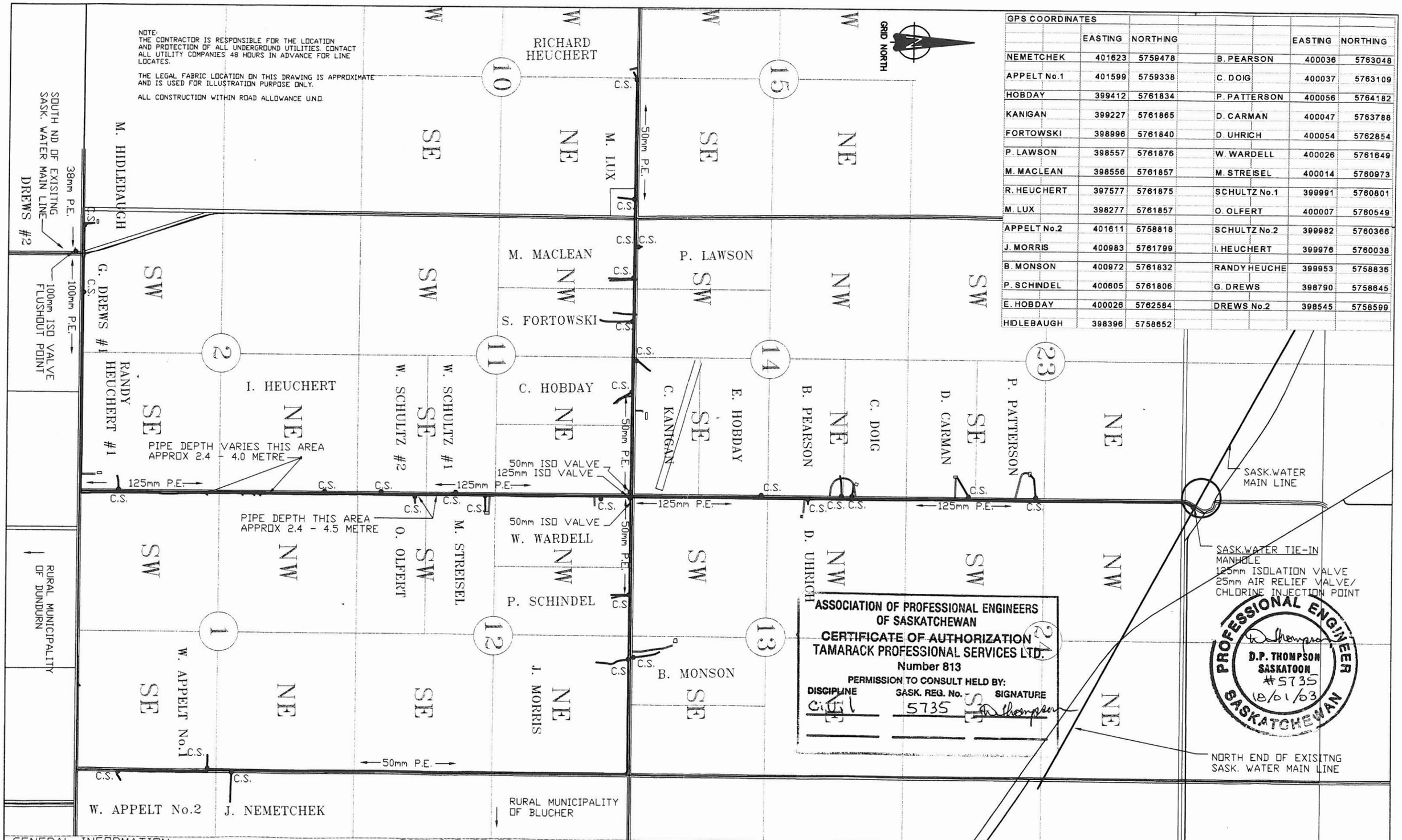

GPS COORDINATES					
	EASTING	NORTHING		EASTING	NORTHING
NEMETCHEK	401623	5759478	B. PEARSON	400036	5763048
APPELT No.1	401599	5759338	C. DOIG	400037	5763109
HOBDAY	399412	5761834	P. PATTERSON	400056	5764182
KANIGAN	399227	5761865	D. CARMAN	400047	5763788
FORTOWSKI	398996	5761840	D. UHRICH	400054	5762854
P. LAWSON	398557	5761876	W. WARDELL	400026	5761649
M. MACLEAN	398556	5761857	M. STREISEL	400014	5760973
R. HEUCHERT	397577	5761875	SCHULTZ No.1	399991	5760801
M. LUX	398277	5761857	O. OLFERT	400007	5760549
APPELT No.2	401611	5758818	SCHULTZ No.2	399982	5760366
J. MORRIS	400983	5761799	I. HEUCHERT	399976	5760038
B. MONSON	400972	5761832	RANDY HEUCHE	399953	5758836
P. SCHINDEL	400605	5761806	G. DREWS	398790	5758645
E. HOBDAY	400026	5762584	DREWS No.2	398545	5758599
HIDLEBAUGH	398396	5758652			

ASSOCIATION OF PROFESSIONAL ENGINEERS OF SASKATCHEWAN
CERTIFICATE OF AUTHORIZATION
TAMARACK PROFESSIONAL SERVICES LTD.
Number 813
PERMISSION TO CONSULT HELD BY:

DISCIPLINE	SASK. REG. No.	SIGNATURE
Civil	5735	D.P. Thompson

GENERAL INFORMATION

CLIENT: SOUTH YELLOWHEAD WATER CORPORATION
CONTRACTOR: TOLLIFSON CABLE SERVICE (306) 693-7272
ENGINEER: D. THOMPSON, TAMARACK PROFESSIONAL SERVICES LTD (306) 955-5191

PIPELINE GENERAL INFORMATION

MAINLINE — 689 kPa, DR17, HDPE, 2.45 MIN. BURIAL U.N.O.
SERVICE CONNECTIONS — 25mm, CSA, CTS, 1103 kPa DR11, UNLESS OTHERWISE NOTED
CURB STOP — CS-25mm - CURB STOP

REVISIONS				
Date	By	No.	Description	Approved
02/07/01	D.T.	A	WATER ENGINEERING	D. THOMPSON
04/12/02	D.T.	B	REDRAWN DRAWING	D. THOMPSON

NOT APPROVED FOR CONSTRUCTION UNLESS SIGNED AND DATED. DESTROY ALL PRINTS BEARING EARLIER DATE AND/OR REVISION.

Designed: D.T. | Scale: 1:20,000
Drawn: C.J.M. | Checked: D.T. | Date: 03/08/2002

DRAWING STATUS

Issued	Date
Preliminary:	
Approved for Construction:	

SOUTH YELLOWHEAD WATER CORPORATION

TAMARACK PROFESSIONAL SERVICES LTD

2002
WATER DISTRIBUTION SYSTEM (RECORD DRAWING)

Revision: A

Drawing No. 01

Appendix A.3

Figures for 3.0 Waste Water

#122, 103 Marquis Court
Saskatoon, SK S7P 0C4
Phone: 403-250-1362
306-668-1966
Fax: 306-668-1968

Engineering Ltd.

TECHNICAL MEMORANDUM 04

Date:	March 31, 2022	File:	7603-002-00/TM04
To:	Chris Doll, English River Property Management	E-mail:	chris.doll@desnedhe.com
	Akshata Patil, Canada Infrastructure Bank		apatil@cib-bic.ca
From:	Ivan Kagoro, MPE Process Engineer	Pages:	5
Subject:	English River Property Management LP, WWTF – EFFLUENT DISPOSAL METHODOLOGY		

1.0 INTRODUCTION

English River Property Management (ERPM) is seeking a loan from Canada Infrastructure Bank (CIB) to facilitate the funding of the wastewater treatment facility (WWTF) project and other infrastructure initiatives within the Grasswoods Reserve 192J.

MPE has been requested to provide a synopsis of the treated effluent disposal approach that will be implemented for ERPM's WWTF. Previous reports that have reviewed the effluent disposal alternatives in detail are

- Effluent Disposal Strategy & Downstream Use Impact Study (DUIS), Report, November 2020,
- Alternate Disposal Pipeline, Technical Memorandum (TM01), March 2021, and
- Stormwater Pond Review, Technical Memorandum (TM02), March 2021.

From the above listed reports and subsequent discussions between ERPM, Indigenous Services Canada (ISC), Water Security Agency (WSA) and the City of Saskatoon (City), there are three methods of effluent disposal that can be implemented for ERPM's WWTF as listed below.

1. Temporary disposal by storage and evaporation from a pond.
2. Temporary disposal via irrigation of immediate un-development lands.
3. Permanent disposal via a future forcemain to City of Saskatoon's Storm Sewer System (proposed) or outfall at the South Saskatewan River (proposed).

Figure 1.1 shows the proposed phases for the Grasswoods subdivision, and the Phase 5 area is the location of the WWTF, future storage pond, and the irrigation area. The five phases have the following developable areas.

- Phase 1 has a total area of 4.02ha,
- Phase 2 has a total area of 4.03ha,
- Phase 3 has a total area of 3.01ha,
- Phase 4 has a total area of 2.87ha, and
- Phase 5 has a total area of 39.04ha.

Phase 1 contains existing development and is part of the Stage 1 current development; Phase 3 and Phase 4 are also in Stage 1. Phase 2 and Phase 5 are proposed for Stage 2 future development.

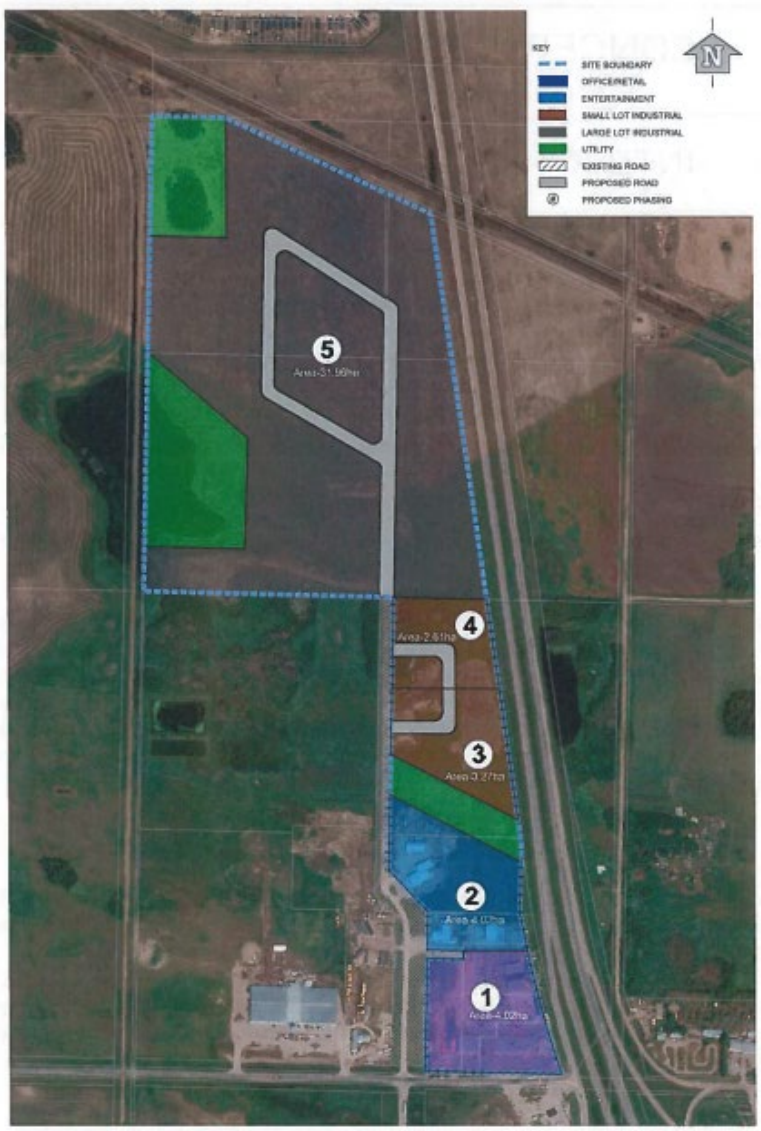

Figure 1.1: Conceptual Phasing Plan
(Retrieved from Conceptual Servicing Plan Report, Urban Systems, January 28, 2019)

2.0 DISPOSAL METHODS REVIEW

2.1 Temporary Disposal by Storage and Evaporation

ERPM WWTF's treated effluent will be discharged in a proposed storage pond proposed to be located immediately north of the WWTP as shown in Figure 2.1. In TM02 the proposed pond size was estimated for a liquid volume of 39,000 m^3; and a surface area of 21,000 m^2 when completely filled.

Based on the *Mean Annual Net Evaporation for Small Lakes and Reservoirs; Saskatchewan Watershed Authority; 2009*, the mean annual net rate of evaporation for Saskatoon was estimated to be 500 mm/yr. This is equivalent to an annual net evaporation rate of 10,500 m^3/yr, or 29 m^3/day based on the pond surface area presented above.

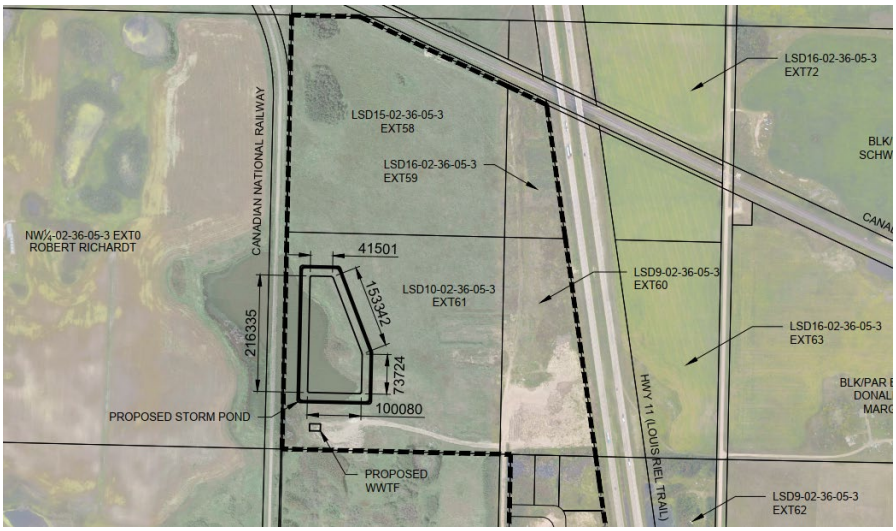

Figure 2.1: Storm Pond Location
(Retrieved from TM02)

Discharge of the WWTF's treated effluent to the pond is an initial temporary first step, and once the pond is full, the WWTF effluent flows will be limited to the pond's net evaporation rate of **29 m^3/d.** If the WWTF effluent flows are at or below this rate, it is estimated that the pond will would take at least 1,345 days to fill the pond to FSL with effluent, assuming that the stormwater flows will remain as existing and not be directed to the pond until further development is completed. Once the effluent flows get higher than the evaporation rate or Grasswood's subdivision's storm system is tied to the pond, alternate effluent discharge methods (described in the following sections) will need to be implemented.

The storage pond's final purpose is as a storm detention pond sized to capture the Grasswoods subdivision's 1:100-year, 24-hour stormwater flows.

2.2 Temporary Disposal via Irrigation

The Wastewater Treatment and Disposal Agricultural Feasibility Report (by Canada North Environmental Services, December 2019) for Irrigation determined that 14.1 ha of land in Phase 5 would be required to dispose of the average daily effluent flow of **188 m^3/d** for the Stage 1 development.

There is only approximately 13.1 ha currently considered irrigable, however an additional maximum of 6.0 ha may be obtained through the implementation of reclamation measures on the portions currently considered no irrigable pending reclamation.

Irrigation would occur during the warmer months of the year while the storage pond would be utilised to store effluent temporarily during the winter months. Additional infrastructure inform of a dedicate supply pump, piping and sprinkler system would be needed.

Figure 2.2 was retrieved from the Agricultural Feasibility Report and shows the potential irrigation areas in Phase 5.

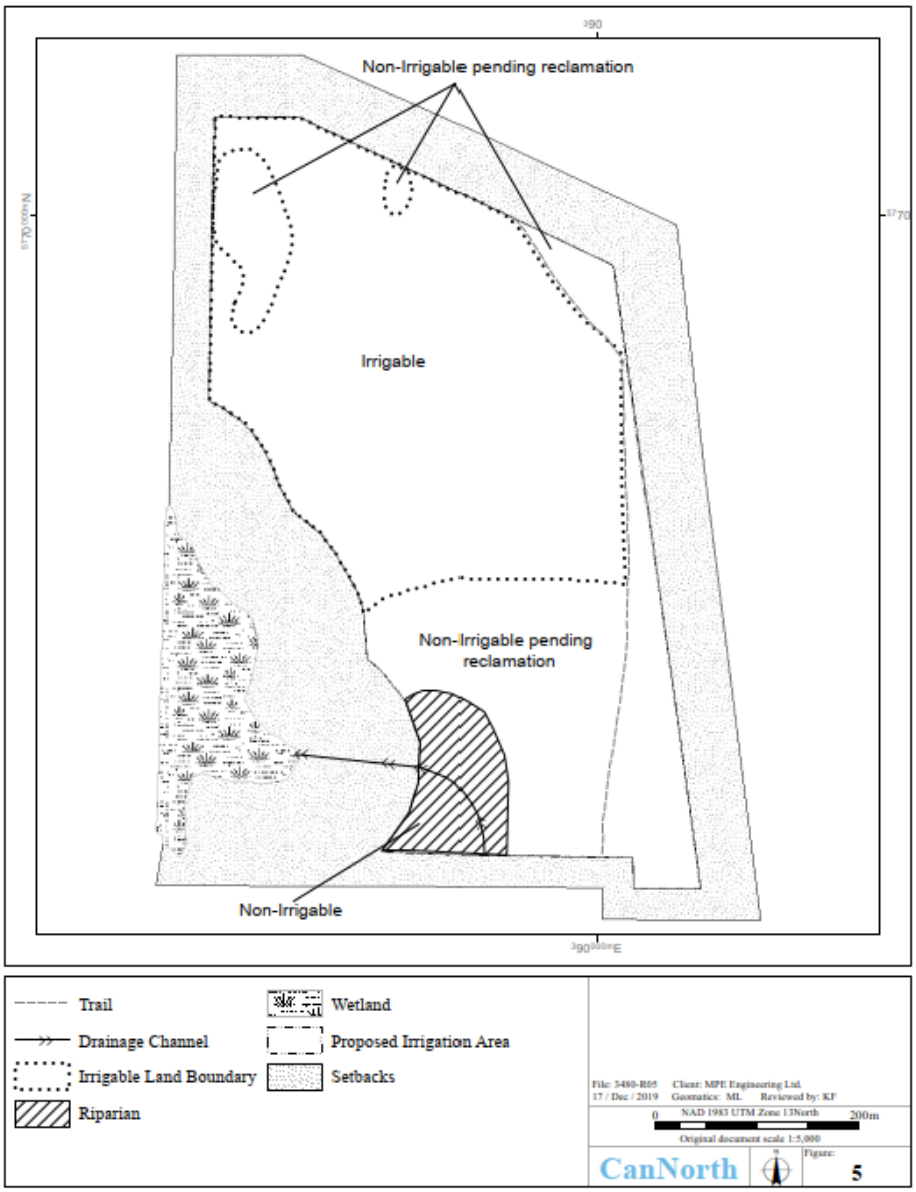

Figure 2.2: Potential Irrigation Area in Phase 5 Grasswoods
(Retrieved from Wastewater Treatment and Disposal Agricultural Feasibility Report, CanNorth, December 2019)

2.3 Permanent Discharge via Forcemain

Ultimately, a permanent discharge of the treated effluent will be required once the WWTF effluent flows exceed the limits for the temporary methods described in the previous sections; or once the subdivision's storm system is complete and in operation. Two alternatives for a permanent discharge location were proposed and they are as follows.

1. Discharge to City of Saskatoon's storm sewer system. TM01 provides a conceptual review and costing for providing pumping and piping of treated effluent from the WWTP to the City of Saskatoon's sewer system at a proposed connection point located south of Preston Avenue intersection.

2. Discharge to the South Saskatchewan River: This alternative involves constructing a forcemain and pumping system to convey treated effluent from the WWTF to the River. The Effluent Disposal Strategy & DUIS report determined that the River has significant assimilation capacity, and that the high-quality effluent would exceed all applicable guidelines and regulations.

For both alternatives, It is expected that a pump station would be constructed with the proposed stormwater pond used as an emergency overflow. The forcemain alignment could be constructed along the existing road allowances between the Grasswoods and the final discharge point.

ERPM would have to complete a detailed review of this disposal method to ensure that the pump and pipe sizing is adequate to service the far future effluent flows from Grasswoods and other stakeholders.

2.4 Summary

The following table provides a summary of the limits of the temporary disposal methods described above.

Disposal Method	**Type**	**WWTP Annual Average Effluent Flow Limit (m^3/d)**
Evaporation	Temporary	29
Irrigation	Temporary	188
Evaporation & Irrigation	Temporary	217
Pump and piping to Saskatoon's Storm Sewer or the South Saskatchewan River	Permanent	TBD

The estimated WWTF effluent discharge limit for a combined evaporation and irrigation disposal is $217m^3/d$.

END OF TECHNICAL MEMORANDUM 4

SET _____

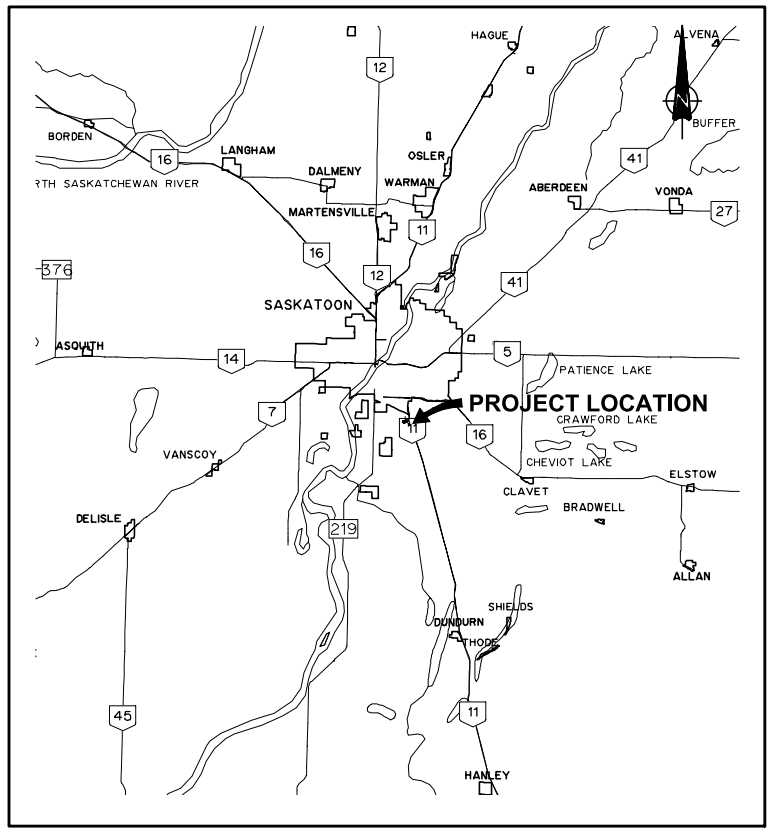

LOCATION PLAN

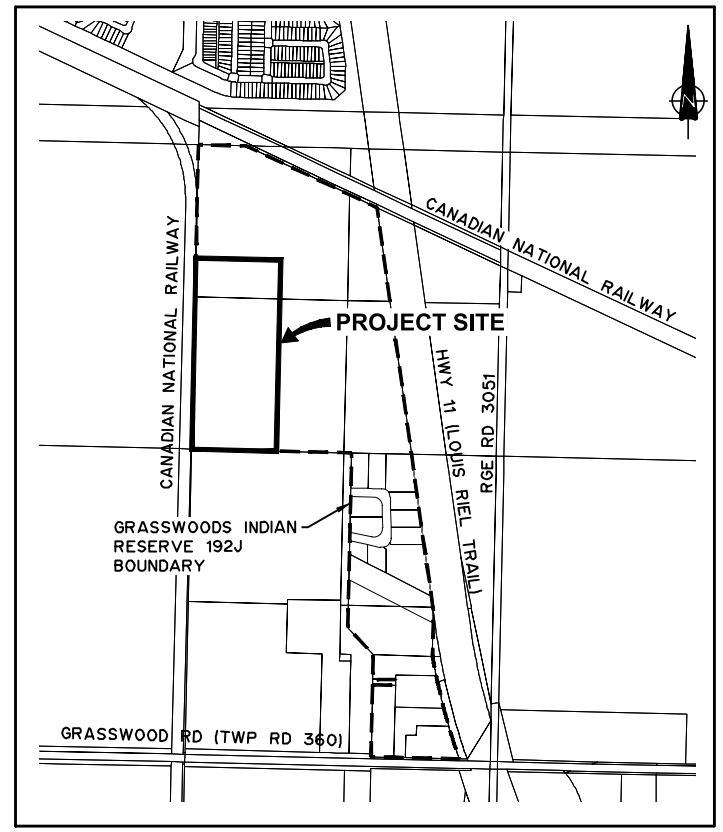

SITE PLAN

ENGLISH RIVER ENTERPRISES PROPERTY MANAGEMENT LP

WASTEWATER TREATMENT FACILITY FOR CONSTRUCTION

7603-002-00

MPE Engineering Ltd.

TITLE SHEET

GENERAL

G0.1 LIST OF DRAWINGS

CIVIL

C0.1 LEGEND
C0.2 ABBREVIATIONS
C1.1 SETBACK PLAN
C1.2 OVERALL SITE PLAN
C1.3 UNDERGROUND PLAN
C1.4 GRADING PLAN
C1.5 ROUGH GRADING PLAN (BY OTHERS)
C2.1 PLAN PROFILE STATION 0+000 TO 0+041.6
C2.2 PLAN PROFILE STATION 0+000 TO 0+113.8
C2.3 PLAN PROFILE STATION 0+000 TO 0+26.8
C2.4 PLAN PROFILE STATION 0+000 TO 0+053.7
C2.5 PLAN PROFILE STATION 0+000 TO 0+54.8
C2.6 PLAN PROFILE STATION 0+000 TO 0+37.7
C2.7 SITE SECTIONS
C3.1 DETAILS SHEET 1
C3.2 DETAILS SHEET 2
C3.3 DETAILS SHEET 3
C3.4 DETAILS SHEET 4
C3.5 DETAILS SHEET 5

ARCHITECTURAL

A0.1 LOWER FLOOR BUILDING CODE REVIEW
A0.2 MAIN FLOOR BUILDING CODE REVIEW
A1.1 ELEVATIONS
A1.2 ELEVATIONS
A2.1 LOWER FLOOR PLAN
A2.2 MAIN FLOOR PLAN
A2.3 CEILING FRAME PLAN
A2.4 ROOF PLAN
A3.1 SECTIONS
A3.2 SECTIONS
A3.3 SECTIONS
A3.4 SECTIONS
A3.5 SECTIONS
A3.6 SECTIONS
A3.7 SECTIONS
A3.8 SECTIONS
A4.1 SCHEDULES
A4.2 SIGN SCHEDULE
A5.1 BUILDING DETAILS
A5.2 BUILDING DETAILS
A5.3 BUILDING DETAILS
A6.1 MILLWORK LAYOUT PLAN
A6.2 MILLWORK ELEVATIONS
A6.3 MILLWORK ELEVATIONS AND DETAILS
A7.1 ALUMINUM STAIR PLANS AND SECTIONS
A7.2 ALUMINUM STAIR DETAILS
A8.1 ALUMINUM PLATFORM PLAN, SECTIONS AND DETAILS
A9.1 MBR TANK - COVER PLAN, AND DETAILS
A10.1 MUA SUPPORT FRAME
A11.1 BRIDGE CRANE PLAN AND DETAILS

STRUCTURAL

S1.1 LOWER FLOOR PLAN
S1.2 MAIN FLOOR PLAN
S1.3 PARTIAL MAIN FLOOR PLAN
S1.4 PARTIAL MAIN FLOOR PLAN
S2.1 CONCRETE SECTIONS
S2.2 CONCRETE SECTIONS
S2.3 CONCRETE SECTIONS
S2.4 CONCRETE SECTIONS
S2.5 CONCRETE SECTIONS
S3.1 REINFORCING DETAILS
S3.2 REINFORCING DETAILS
S3.3 REINFORCING DETAILS
S3.4 REINFORCING DETAILS
S4.1 DETAILS
S5.1 SEPTAGE RECEIVING STATION BUILDING SLAB AND FOUNDATION

MECHANICAL

M0.1 MECHANICAL LEGEND
M1.1 HEATING AND VENTILATION FLOW DIAGRAM
M2.1 HVAC LOWER LEVEL PLAN
M2.2 HEATING AND VENTILATION MAIN LEVEL PLAN
M2.3 PLUMBING, FIRE PROTECTION AND SANITARY LOWER LEVEL PLAN
M2.4 PLUMBING, FIRE PROTECTION AND SANITARY MAIN LEVEL PLAN
M2.5 PLUMBING AND FIRE PROTECTION MECHANICAL ROOM WASHROOM AND LABORATORY
M3.1 MECHANICAL DETAILS
M3.2 MECHANICAL DETAILS

PROCESS PIPING

P0.1 EQUIPMENT LEGEND
P0.2 PIPING LEGEND
P0.3 INSTRUMENTATION LEGEND
P0.4 PROCESS FLOW OVERVIEW
P0.5 HYDRAULIC PROFILES PHASE 1 LIQUID STREAM
P0.6 HYDRAULIC PROFILES PHASE 2 LIQUID STREAM
P0.7 HYDRAULIC PROFILES PHASE 1 SOLID STREAM
P0.8 HYDRAULIC PROFILES PHASE 2 SOLID STREAM
P1.1 PID - INFLUENT PUMPING STATION
P1.2 PID - FINE SCREENING
P1.3 PID - BIOREACTORS
P1.4 PID - MEMBRANE TANK
P1.5 PID - PERMEATE PUMPING
P1.6 PID - MEMBRANE TANK AND UV DISINFECTION
P1.7 PID - EFFLUENT CHAMBER AND PUMPING
P1.8 PID - SLUDGE THICKENING AND AEROBIC DIGESTORS
P1.9 PID - AIR SYSTEMS
P1.10 PID - POLYMER FEED SYSTEM
P1.11 PID - CLEAN-IN-PLACE CHEMICAL FEED SYSTEM
P1.12 PID - ALUM AND SODIUM HYDROXIDE FEED SYSTEMS
P1.13 PID - COMPRESSOR AND AUXILLARY SYSTEMS
P1.14 PID - SEPTAGE RECEIVING STATION
P1.15 SUEZ EQUIPMENT TAG LIST - SHEET 1
P1.16 SUEZ EQUIPMENT TAG LIST - SHEET 2
P1.17 SUEZ EQUIPMENT TAG LIST - SHEET 3
P2.1 LOWER LEVEL PLAN
P2.2 MAIN LEVEL PLAN
P2.3 CHEMICAL FEED PIPING SCHEMATIC - LOWER LEVEL FLOOR PLAN
P2.4 CHEMICAL FEED PIPING SCHEMATIC - MAIN LEVEL FLOOR PLAN
P2.5 PLANT SERVICE WATER PIPING SCHEMATIC LOWER LEVEL FLOOR PLAN
P2.6 PLANT SERVICE WATER PIPING SCHEMATIC MAIN LEVEL FLOOR PLAN
P2.7 COMPRESSED AIR PIPING SCHEMATIC LOWER LEVEL FLOOR PLAN
P2.8 COMPRESSED AIR PIPING SCHEMATIC MAIN LEVEL FLOOR PLAN
P2.9 PROCESS SECTIONS
P3.1 HEADWORKS AND TREATMENT AREA - LOWER LEVEL PLAN
P3.2 HEADWORKS AND TREATMENT AREA - MAIN LEVEL PLAN
P3.3 HEADWORKS AND TREATMENT AREA - SECTIONS
P3.4 HEADWORKS AND TREATMENT AREA - SECTIONS
P3.5 HEADWORKS AND TREATMENT AREA - SECTIONS
P3.6 HEADWORKS AND TREATMENT AREA - SECTIONS
P3.7 HEADWORKS AND TREATMENT AREA - SECTIONS
P3.8 HEADWORKS AND TREATMENT AREA - ROTARY DRUM THICKENER PLAN AND SECTIONS
P3.9 HEADWORKS AND TREATMENT AREA - POLYMER FEED SYSTEM DETAILS
P3.10 HEADWORKS AND TREATMENT AREA - DETAILS
P4.1 BIOREACTOR AND PUMP ROOM - LOWER LEVEL LOWER PIPING
P4.2 BIOREACTOR AND PUMP ROOM - LOWER LEVEL UPPER PIPING
P4.3 BIOREACTOR AND PUMP ROOM - MAIN LEVEL
P4.4 BIOREACTOR AND PUMP ROOM - SECTIONS
P4.5 BIOREACTOR AND PUMP ROOM - SECTIONS
P4.6 BIOREACTOR AND PUMP ROOM - SECTIONS
P4.7 BIOREACTOR AND PUMP ROOM - SECTIONS
P4.8 BIOREACTOR AND PUMP ROOM - SECTIONS
P4.9 BIOREACTOR AND PUMP ROOM - SECTIONS
P4.10 BIOREACTOR AND PUMP ROOM - SUBMERGED VALVE DETAILS
P4.11 BIOREACTOR AND PUMP ROOM - COMPRESSOR SYSTEM
P4.12 BIOREACTOR AND PUMP ROOM DETAILS
P5.1 TYPICAL DETAILS SHEET 1
P5.2 TYPICAL DETAILS SHEET 2
P5.3 TYPICAL DETAILS SHEET 3
P5.4 TYPICAL DETAILS SHEET 4

ELECTRICAL

E0.1 ELECTRICAL LEGEND
E0.2 ELECTRICAL SITE PLAN
E0.3 COMMUNICATION AND CONTROL
E1.1 ELECTRICAL LOWER LEVEL PLAN
E1.2 ELECTRICAL MAIN FLOOR PLAN
E1.3 LIGHTING AND RECEPTACLE LOWER LEVEL PLAN
E1.4 LIGHTING AND RECEPTACLE MAIN FLOOR PLAN
E1.5 INSTRUMENTATION LOWER LEVEL PLAN
E1.6 INSTRUMENTATION MAIN FLOOR PLAN
E1.7 ELECTRICAL ROOM PLAN
E1.8 ELECTRICAL ROOM SECTION
E1.9 ELECTRICAL ROOM SECTION
E1.10 ELECTRICAL ROOM SECTION
E1.11 ELECTRICAL ROOM SECTION
E1.12 LIGHTING SECTIONS
E1.13 CABLE TRAY SECTION
E1.14 CABLE TRAY SECTION
E1.15 CABLE TRAY SECTION
E1.16 CABLE TRAY SECTION
E2.1 SINGLE LINE DIAGRAM
E2.2 SINGLE LINE DIAGRAM
E2.3 PANEL A AND UPS PANEL SCHEDULES
E2.4 LUMINAIRE AND MECHANICAL SCHEDULES
E2.5 CABLE AND CONDUIT SCHEDULE
E2.6 CABLE AND CONDUIT SCHEDULE
E2.7 CABLE AND CONDUIT SCHEDULE
E2.8 CABLE AND CONDUIT SCHEDULE
E2.9 CABLE AND CONDUIT SCHEDULE
E2.10 CABLE AND CONDUIT SCHEDULE
E2.11 CABLE AND CONDUIT SCHEDULE
E2.12 CABLE AND CONDUIT SCHEDULE
E2.13 CABLE AND CONDUIT SCHEDULE
E3.1 ACCESS CONTROL LAYOUT
E3.2 ACCESS CONTROL DETAIL
E4.1 SCHEMATICS
E4.2 SCHEMATICS
E4.3 SCHEMATICS
E4.4 SCHEMATICS
E4.5 SCHEMATICS
E5.1 ELECTRICAL DETAILS
E5.2 ELECTRICAL DETAILS
E5.3 ELECTRICAL DETAILS
E5.4 ELECTRICAL DETAILS
E5.5 ELECTRICAL DETAILS
E5.6 ELECTRICAL DETAILS
E5.7 ELECTRICAL DETAILS
E5.8 ELECTRICAL DETAILS

THIS DRAWING MAY HAVE BEEN MODIFIED FROM ITS ORIGINAL SIZE. ALL SCALE NOTATIONS INDICATED ARE BASED ON 11"x17" FORMAT DRAWINGS

ISSUE	YY-MM-DD	REVISION
2	21-01-15	FOR CONSTRUCTION
1	20-10-15	FOR TENDER

Association of Professional Engineers & Geoscientists of Saskatchewan
CERTIFICATE OF AUTHORIZATION
MPE Engineering Ltd.
Number C1334
Permission to Consult held by:

Discipline	Sk. Reg. No.	Signature
CIVIL	22727	
ENV	22727	

PROFESSIONAL ENGINEER
M. STUSICK
MEMBER 22727
January 21 2021
YR. MN. DAY
SASKATCHEWAN

MPE Engineering Ltd.

ENGLISH RIVER ENTERPRISES PROPERTY MANAGEMENT LP

WASTEWATER TREATMENT PLANT
LIST OF DRAWINGS

DESIGNED	I.K.	JOB	7603-002-00
DRAWN	J.P.	SCALE	
DATE	NOVEMBER 2020	DRAWING	G0.1

PROPOSED	LEGAL SURVEY AND CONTROL	EXISTING
	SASKATCHEWAN SURVEY CONTROL MONUMENT	SSCM No.
	CONTROL POINT	CP No.
	IRON PIN	
	PROPERTY LINE	
	UTILITY RIGHT OF WAY EASEMENT	

PROPOSED	SHALLOW UTILITIES	EXISTING
C	CABLE	C
FO	FIBRE OPTIC	FO
G	GAS	G
	GAS ABANDONED	G
OH	OVERHEAD POWER	OH
T	TELEPHONE	T
UG	UNDERGROUND POWER	UG

PROPOSED	WATERWORKS	EXISTING
	BUTTERFLY VALVE	
	GATE VALVE	
	HYDRANT	
	CURB STOP	
W 150	WATER MAIN	W 150
	WATER MAIN ABANDONED	

PROPOSED	SURFACE FEATURES	EXISTING
XXX / XXX.XX	ABBREVIATION / ELEVATION	XXX / XXX.XX
	ASPHALT SWALE	
	BOLLARD	
	BOREHOLE	
	BUSH	
	BUS PAD	BP
	BUS SHELTER	BS
	CONCRETE SWALE	
	CURB AND GUTTER	
	DRAINAGE DITCH	
	DRAINAGE SWALE	
	DRAINAGE SWALE BACKFILLED	
	EDGE OF PAVEMENT	
ET	ELECTRICAL TRANSFORMER	ET
	FENCE BARBED WIRE	
	FENCE CHAIN LINK	
	FENCE TO BE REMOVED	
GW	GUY WIRE	GW
LS	LIGHT STANDARD	LS
	MONOLITHIC SIDEWALK	
PED	PEDESTAL	PED
PP	POWER POLE	PP
	RAILWAY	
	ROAD MARKING DELINEATION	
	REMOVALS	
	MILLING AND OVERLAY	
	ASPHALT ROAD	
	GRAVEL ROAD	
	SEPARATE SIDEWALK	
	SIGN	
	SILT FENCE	
TS	TRAFFIC SIGNAL	TS
	TREE	

PROPOSED	FITTINGS	EXISTING
	BELLxFLANGE ADAPTER	
	COUPLER	
	CROSS	
	ELBOW 90°	
	ELBOW 45°	
	LOT SERVICE	
	MANHOLE	
	PLUG	
	REDUCER	
	TEE	
	VAULT	
WP	WATER POINT	WP

PROPOSED	SEWERS	EXISTING
	CATCH BASIN	
	CULVERT	
	CLEANOUT	
	INLET STRUCTURE	
	LANDSCAPE CATCH BASIN	
	OUTFALL STRUCTURE	
	PLUG VALVE	
S 200	SANITARY	S 200
S 200	SANITARY ABANDONED	S 200
ST 200	STORM	ST 200
ST 200	STORM ABANDONED	ST 200
TD 100	TILE DRAIN	TD 100

LINE LABELLING

PIPE DIAMETER (mm) — PIPE MATERIAL

LINE IDENTIFICATION

YYY-200-ZZZ

S	SANITARY WASTE
TEW	TEMPERED EFFLUENT WASTE
TE	TREATED EFFLUENT
OF	OVERFLOW

LINE CODE	FLANGE RATING	SCH OR THICKNESS	BASIC MATERIAL	SPECIAL NOTES
B8	ANSI 150	SDR 35	PVC	-
B11	AWWA 150	C900 AND C905	PVC	-
D2	ANSI 150	SCH 10S	STAINLESS STEEL, 316L	-
J2	-	CLASS V	REINFORCED CONCRETE PIPE	-
D4	ANSI 150	SCH 40	STAINLESS STEEL TYPE 316L	-
F1			HDPE DRAINPIPE	C/W FILTER SOCK
B6	ANSI 150	SDR 28	PVC	-
D1	ABSI 150	SCH 10S	STAINLESS STEEL TYPE 304L	-
H2	-	DR11	HDPE, C406	

NOTES:

1. ALL ELEVATIONS, STATIONS, PIPE LENGTHS AND DIMENSIONS IN METRES AND PIPE SIZES IN MILLIMETRES UNLESS NOTED OTHERWISE.
2. ALL BOLD ITEMS INDICATE WORK TO BE DONE AND ALL LIGHT ITEMS INDICATE EXISTING CONDITIONS.

UTM 13 NAD 83
COORDINATES

THE EXISTENCE, LOCATION AND ELEVATION OF ALL UTILITIES AS SHOWN ON ANY PLANS MAY BE BASED ON INFORMATION RECEIVED FROM THE RESPECTIVE AUTHORITIES AND ARE NOT GUARANTEED BY THE ENGINEER. NO RESPONSIBILITY IS IMPLIED OR ASSUMED BY THE ENGINEER AS TO THE LOCATION AND ELEVATION OR ANY OMISSIONS. THE CONTRACTOR OR ANY THIRD-PARTY IS RESPONSIBLE FOR DETERMINING THE EXISTENCE, LOCATION AND ELEVATION OF ALL SUCH UTILITIES AND MUST CONTACT THE VARIOUS UTILITY COMPANIES FOR ON SITE INFORMATION PRIOR TO COMMENCEMENT OF ANY OPERATIONS.

THIS DRAWING MAY HAVE BEEN MODIFIED FROM ITS ORIGINAL SIZE. ALL SCALE NOTATIONS INDICATED ARE BASED ON 11"x17" FORMAT DRAWINGS

ISSUE	YY-MM-DD	REVISION
2	21-01-15	FOR CONSTRUCTION
1	20-10-15	FOR TENDER

Association of Professional Engineers & Geoscientists of Saskatchewan
CERTIFICATE OF AUTHORIZATION
MPE Engineering Ltd.
Number C1334
Permission to Consult held by:

Discipline	Sk. Reg. No.	Signature
CIVIL	22727	
ENV	22727	

PROFESSIONAL ENGINEER
M. STUSICK
MEMBER 22727
January 21 2021
YR. MN. DAY
SASKATCHEWAN

MPE Engineering Ltd.

ENGLISH RIVER ENTERPRISES PROPERTY MANAGEMENT LP

WASTEWATER TREATMENT PLANT
CIVIL
LEGEND

DESIGNED	I.K.	JOB	7603-002-00
DRAWN	T.D.D.	SCALE	NTS
DATE	NOVEMBER 2020	DRAWING	C0.1

ABANDONED	AB
ACRE	AC
AIR RELEASE MANHOLE	AR
ALBERTA SURVEY CONTROL MONUMENT	ASCM
ASBESTOS CEMENT	AC
ASPHALTIC CONCRETE PAVEMENT	ACP
AT	@
AVENUE	AVE
BACK OF WALK	BOW
BEDDING	BED
BEGINNING OF CURVE	BC
BEGINNING OF VERTICAL CURVE	BVC
BENCH MARK	BM
BLOCK	BLK
BOTTOM	BTM
BOTTOM OF PIPE	BOP
BOUNDARY	BDY
BOULEVARD	BLVD
BUILDING	BLDG
CABLE	C
CANADIAN NATIONAL RAILWAY	CNR
CANADIAN PACIFIC RAILWAY	CPR
CANADIAN STANDARDS ASSOCIATION	CSA
CAPACITY	CAP
CAST IRON	CI
CATCH BASIN	CB
CATHODIC PROTECTION	CP
CENTRE LINE	CL
CERTIFICATE OF TITLE	C OF T
CHAIN LINK FENCE	CLF
CHECK VALVE IN MANHOLE	CVM
CLASS	CL
CLEAN OUT	CO
COMMUNITY RESERVE	COMM RES
COMPLETE WITH	C/W
CONCRETE	CONC
CONDUIT	COND
CORRUGATED METAL PIPE	CMP
CORRUGATED STEEL PIPE	CSP
COUPLING	CPLG
CREEK	CRK
CRESCENT	CRES
CROSSFALL	X-FALL
CROSS SECTION	X-SEC
CUBIC METRE PER SECOND	m^3/s
CULVERT	CULV
CURB AND GUTTER	C&G
CURED IN PLACE PIPE	CIPP
CURVE TO SPIRAL	CS
DEGREE	°
DELTA	Δ
DIAMETER	Φ
DIMENSION RATIO	DR
DRAWING	DWG
DRIVEWAY	DWY
DUCTILE IRON	DI
DWELLING	DWLG
EAST	E
EDGE OF GRAVEL	EOG
EDGE OF PAVEMENT	EOP
EDGE OF ROAD	EOR
ELECTRICAL TRANSFORMER	ET
ELEVATION	ELEV
ENCASEMENT	ENC
END OF CURVE	EC
END OF VERTICAL CURVE	EVC
ENGINEER	ENG
ENVIRONMENTAL RESERVE	ER
EXTERIOR DROP	EXT DROP
EXISTING GROUND	EG

FACE OF CURB	FOC
FACE OF WALK	FOW
FIBRE OPTIC	FO
FINISHED GRADE	FG
FINISHED LANDSCAPE GRADE	FLG
FLANGE	FLG
FLAPPER GATE	FP
FLOOD PLAIN	FLD PLN
FLOOD WAY	FLD WY
FLOOR	FLR
FLOW RATE	Q
FOOTING	FTG
FORCE MAIN	FM
GALVANIZED	GALV
GALVANIZED IRON	GI
GAS	G
HECTARE	ha
HEIGHT	H
HIGH DENSITY POLYETHYLENE	HDPE
HIGH POINT	HP
HIGHWAY	HWY
HORIZONTAL	HOR OR H
HOSPITAL	HOSP
HYDRANT	HYD
INLET CHAMBER	IC
INLET CONTROL DEVICE	ICD
INLET/OUTLET STRUCTURE (DRY POND)	I/O
INSIDE DIAMETER	ID
INTERSECTION	INT
INVERT	INV
IRON PIN	IP
KILOGRAM	kg
KILOMETRES	km
KILOMETRES PER HOUR	km/h
RATE OF CURVATURE	K
LENGTH	L
LENGTH OF CURVE	LC
LENGTH OF VERTICAL CURVE	LVC
LIFT STATION	LS
LIP OF GUTTER	LG
LIP OF GUTTER RADIUS	LGR
LONG RADIUS	LR
LONG TANGENT	LT
LOW POINT	LP
LOW PROFILE CURB AND GUTTER	LPC&G
MANHOLE	MH
MAXIMUM	MAX
MEDIAN	MED
METRE	m
METRES PER SECOND	m/s
METER CHAMBER	MC
MIDDLE ORDINATE DISTANCE (VERTICAL SEPARATION FROM PI)	M
MILLIMETRE	mm
MINIMUM	MIN
MINUTES	'
MONOLITHIC SIDEWALK	MONO
MUNICIPAL RESERVE	MR
NORTH	N
NORTH EAST	NE
NORTH WEST	NW
NOT TO SCALE	NTS
ON CENTRE	OC
OUTLET CHAMBER	OC
OUTSIDE DIAMETER	OD
OVERHEAD POWER	OH

PER	/
PERCENT	%
POINT OF INTERSECTION	PI
POLYETHYLENE	PE
POLYVINYL CHLORIDE	PVC
POWER POLE	PP
POUNDS PER SQUARE INCH	PSI
PRESSURE REDUCING MANHOLE	PRVM
PROPERTY LINE	PL
PULL BOX	PB
PUMP STATION	PS
RADIUS	R
RANGE	RGE
RAW WATER	RW
REDUCER	RED
REGISTERED PLAN	REG'D PL
REINFORCED	RE
REINFORCED CONCRETE	RC
RELOCATION	RELO
RESERVOIR	RES
RIGHT OF WAY	ROW
ROAD	RD
ROLLED CURB AND GUTTER	RCG
RUBBER GASKET	RG
SANITARY	S
SECOND	"
SHOULDER	SHLD
SLOPE	S
SOUTH	S
SOUTH EAST	SE
SOUTH WEST	SW
SPIRAL TO CURVE	SC
SPIRAL TO TANGENT	ST
SQUARED	SQ
STANDARD	STD
STAINLESS STEEL	SST
STATION	STA
STEEL	ST
STREET	ST
STORM	ST
TANGENT	TAN
TANGENT TO SPIRAL	TS
TAPPING VALVE	TV
TELEPHONE	T
THRUST BLOCK	TB
TOP OF ASPHALT	TOA
TOP OF CURB	TOC
TOP OF PIPE	TOP
TOP OF RAIL	TOR
TOWNSHIP	TWP
TRAFFIC SIGNAL	TS
TYPICAL	TYP
UNDERGROUND POWER	UG
UTILITY RIGHT OF WAY	URW
VALVE	V
VALVE CHAMBER	VC
VELOCITY	VEL
VERTICAL	VER OR V
VERTICAL BEND DOWN	VBD
VERTICAL BEND UP	VBU
VERTICAL CURVE	VC
VERTICAL POINT OF INTERSECTION	VPI
VITRIFIED CLAY TILE	VCT
WATER	W
WEST	W
WEEPING TILE DRAIN	WTD
WHEEL CHAIR RAMP	WCR
WIDTH	W

OVERLAND STORM WATER FLOW FORMULA ABBREVIATIONS

DEPTH OF FLOW IN 1 IN 5 YEAR STORM EVENT	$D_{1:5}$
DEPTH OF FLOW IN 1 IN 100 YEAR STORM EVENT	$D_{1:100}$
FLOW RATE FOR A 1 IN 5 YEAR STORM EVENT	$Q_{1:5}$
FLOW RATE FOR A 1 IN 100 YEAR STORM EVENT	$Q_{1:100}$
VELOCITY FOR A 1 IN 5 YEAR STORM EVENT	$V_{1:5}$
VELOCITY FOR A 1 IN 100 YEAR STORM EVENT	$V_{1:100}$

THIS DRAWING MAY HAVE BEEN MODIFIED FROM ITS ORIGINAL SIZE. ALL SCALE NOTATIONS INDICATED ARE BASED ON 11"x17" FORMAT DRAWINGS

ISSUE	YY-MM-DD	REVISION
2	21-01-15	FOR CONSTRUCTION
1	20-10-15	FOR TENDER

Association of Professional Engineers & Geoscientists of Saskatchewan
CERTIFICATE OF AUTHORIZATION
MPE Engineering Ltd.
Number C1334
Permission to Consult held by:

Discipline	SK. Reg. No.	Signature
CIVIL	22727	
ENV	22727	

PROFESSIONAL ENGINEER
M. STUCK
MEMBER 22727
January 21 2021
YR. MN. DAY.
SASKATCHEWAN

MPE Engineering Ltd.

ENGLISH RIVER ENTERPRISES
PROPERTY MANAGEMENT LP

WASTEWATER TREATMENT PLANT
CIVIL
ABBREVIATIONS

DESIGNED	I.K.	JOB	7603-002-00
DRAWN	T.D.D.	SCALE	
DATE	NOVEMBER 2020	DRAWING	C0.2

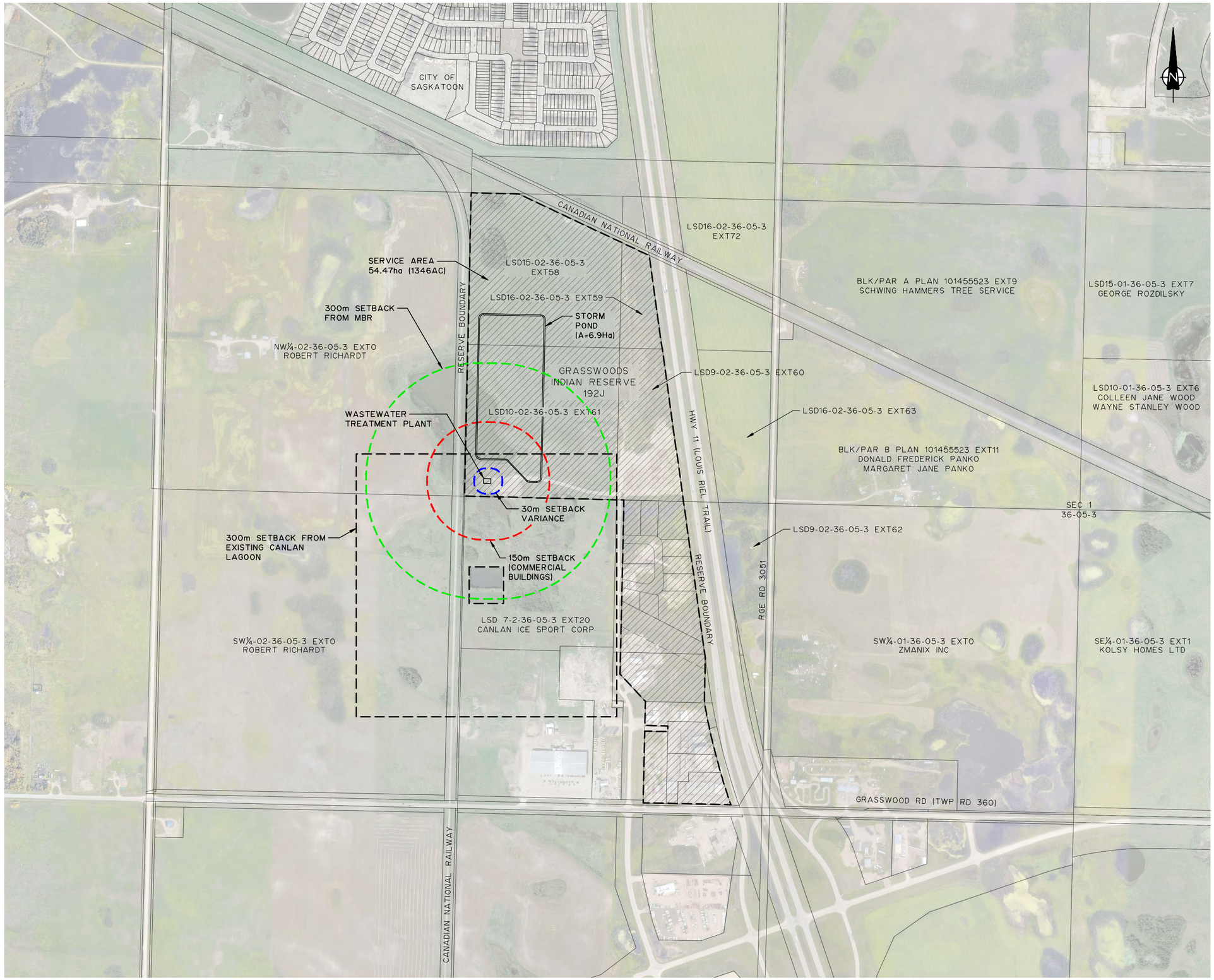

NOTES:

1. FOR INFORMATION REGARDING GENERAL NOTES, UTILITIES, SYMBOLS AND ABBREVIATIONS REFER TO THE LEGEND AND ABBREVIATIONS DRAWINGS.
2. CONTRACTOR TO EXPOSE EXISTING UTILITY LINES BY HYDROVAC EXCAVATION AND CONFIRM ELEVATIONS.

THIS DRAWING MAY HAVE BEEN MODIFIED FROM ITS ORIGINAL SIZE. ALL SCALE NOTATIONS INDICATED ARE BASED ON 11"x17" FORMAT DRAWINGS

ISSUE	YY-MM-DD	REVISION
2	21-01-15	FOR CONSTRUCTION
1	20-10-15	FOR TENDER

Association of Professional Engineers & Geoscientists of Saskatchewan
CERTIFICATE OF AUTHORIZATION
MPE Engineering Ltd.
Number C1334
Permission to Consult held by:

Discipline	Sk. Reg. No.	Signature
CIVIL	22727	
ENV	22727	

PROFESSIONAL ENGINEER
M. STUSICK
MEMBER 22727
January 21 2021
YR. MN. DAY
SASKATCHEWAN

MPE Engineering Ltd.

ENGLISH RIVER ENTERPRISES PROPERTY MANAGEMENT LP

WASTEWATER TREATMENT PLANT
CIVIL
SITE SETBACK PLAN

DESIGNED	I.K.	JOB	7603-002-00
DRAWN	T.D.D.	SCALE	1:10000
DATE	NOVEMBER 2020	DRAWING	C1.1

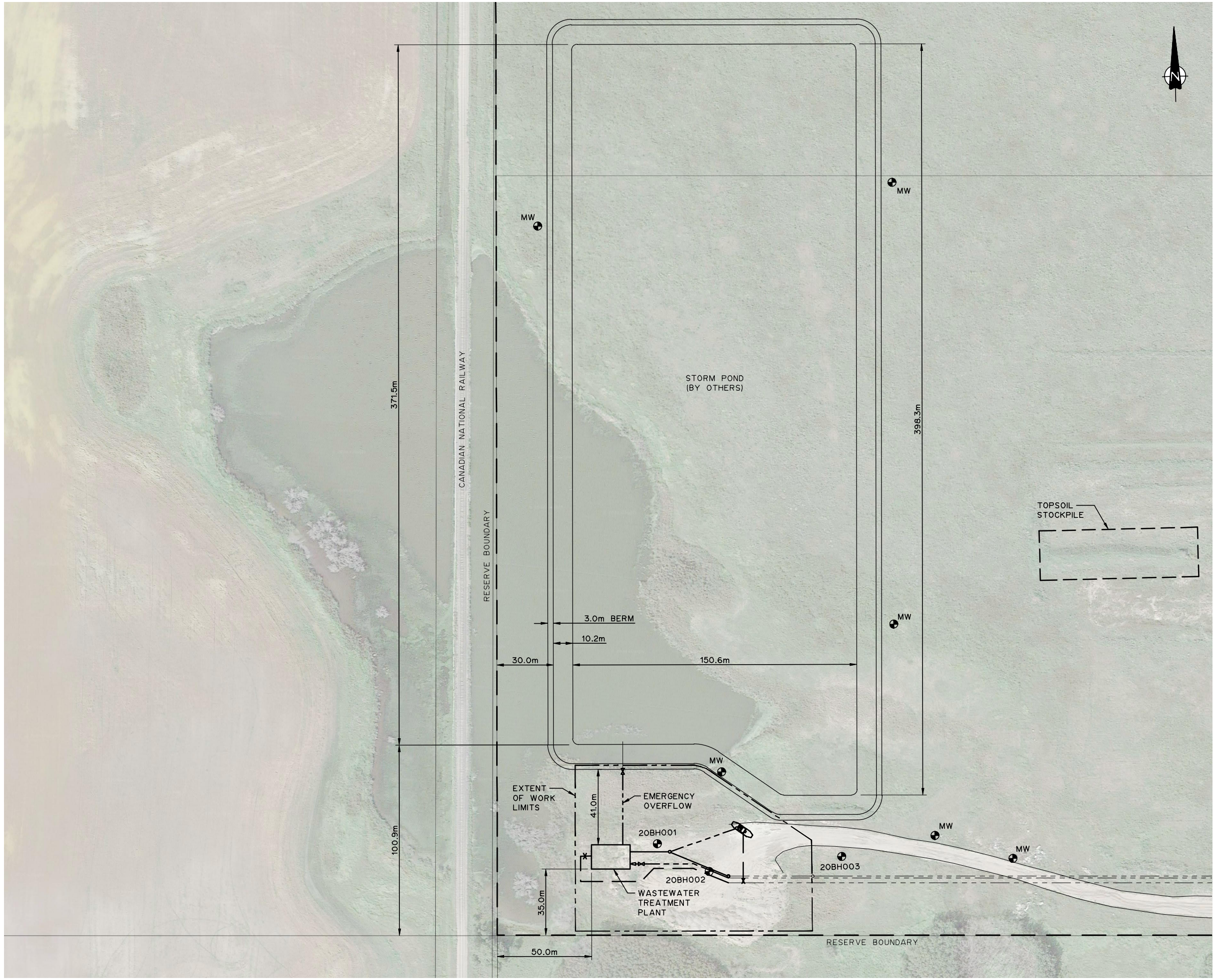

NOTES:

1. FOR INFORMATION REGARDING GENERAL NOTES, UTILITIES, SYMBOLS AND ABBREVIATIONS REFER TO THE LEGEND AND ABBREVIATIONS DRAWINGS.
2. CONTRACTOR TO EXPOSE EXISTING UTILITY LINES BY HYDROVAC EXCAVATION AND CONFIRM ELEVATIONS.
3. STRIP SITE AS NECESSARY TO PREVENT CONTAMINATION OF MATERIALS.
4. PROTECT ALL EXISTING SITE FEATURES UNLESS OTHERWISE NOTED.

20BHXXX	BOREHOLE NUMBER
MW	MONITORING WELL

THIS DRAWING MAY HAVE BEEN MODIFIED FROM ITS ORIGINAL SIZE. ALL SCALE NOTATIONS INDICATED ARE BASED ON 11"x17" FORMAT DRAWINGS

ISSUE	YY-MM-DD	REVISION
2	21-01-15	FOR CONSTRUCTION
1	20-10-15	FOR TENDER

Association of Professional Engineers & Geoscientists of Saskatchewan
CERTIFICATE OF AUTHORIZATION
MPE Engineering Ltd.
Number C1334
Permission to Consult held by:

Discipline	Sk. Reg. No.	Signature
CIVIL	22727	
ENV	22727	

PROFESSIONAL ENGINEER
M. J. STUSICK
MEMBER 22727
January 21 2021
YR. MN. DAY.
SASKATCHEWAN

MPE Engineering Ltd.

ENGLISH RIVER ENTERPRISES
PROPERTY MANAGEMENT LP

WASTEWATER TREATMENT PLANT
CIVIL
OVERALL SITE PLAN

DESIGNED	I.K.	JOB	7603-002-00
DRAWN	T.D.D.	SCALE	1:2000
DATE	NOVEMBER 2020	DRAWING	C1.2

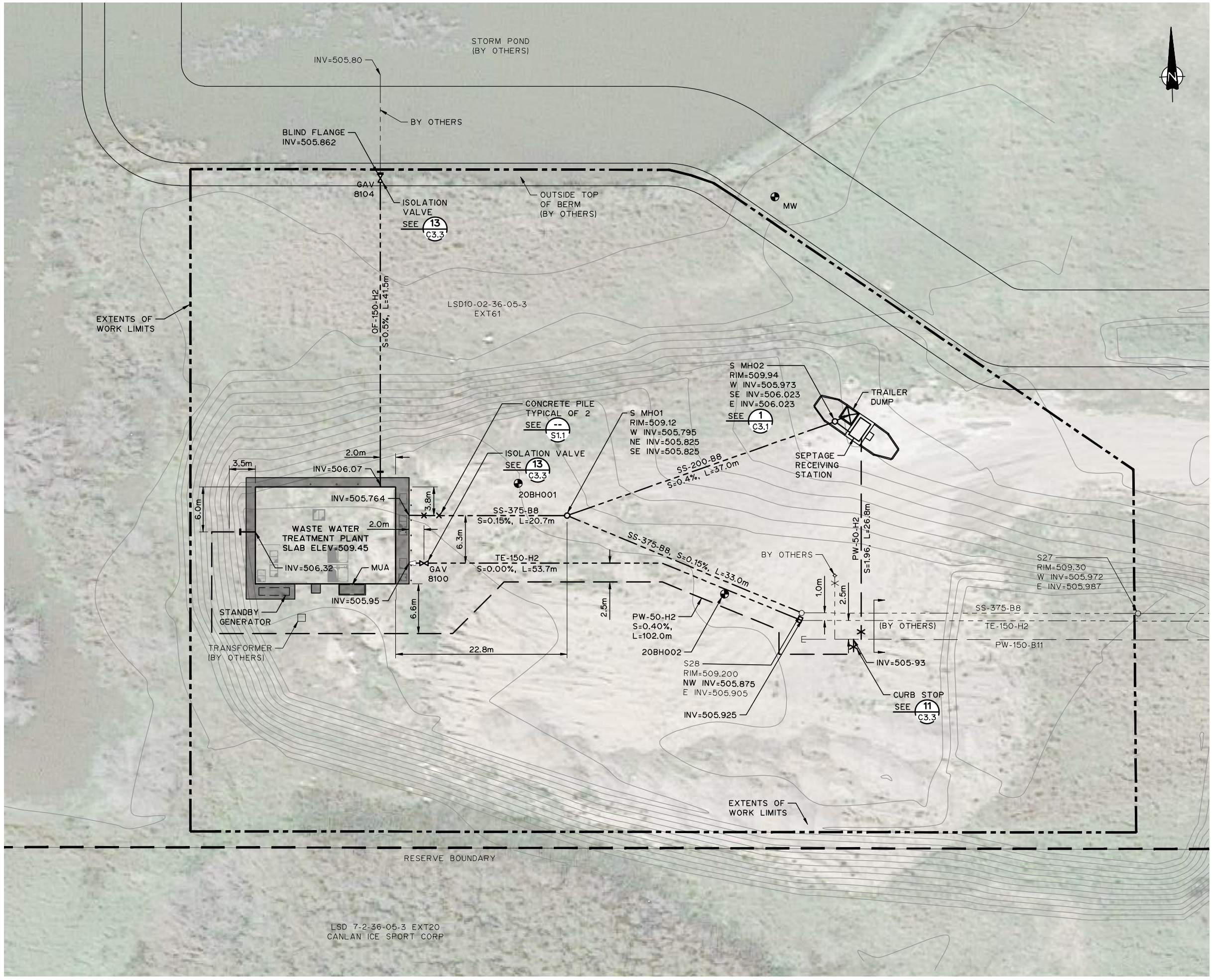

NOTES:

1. FOR INFORMATION REGARDING GENERAL NOTES, UTILITIES, SYMBOLS AND ABBREVIATIONS REFER TO THE LEGEND AND ABBREVIATIONS DRAWINGS.
2. CONTRACTOR TO EXPOSE EXISTING UTILITY LINES BY HYDROVAC EXCAVATION AND CONFIRM ELEVATIONS.
3. STRIP SITE AS NECESSARY TO PREVENT CONTAMINATION OF MATERIALS.
4. PROTECT ALL EXISTING SITE FEATURES UNLESS OTHERWISE NOTED.
5. UNSUITABLE MATERIAL TO BE REMOVED AND DISPOSED OF.

20BHXXX	BOREHOLE NUMBER
MW	MONITORING WELL

THIS DRAWING MAY HAVE BEEN MODIFIED FROM ITS ORIGINAL SIZE. ALL SCALE NOTATIONS INDICATED ARE BASED ON 11"x17" FORMAT DRAWINGS

ISSUE	YY-MM-DD	REVISION
2	21-01-15	FOR CONSTRUCTION
1	20-10-15	FOR TENDER

Association of Professional Engineers & Geoscientists of Saskatchewan
CERTIFICATE OF AUTHORIZATION
MPE Engineering Ltd.
Number C1334
Permission to Consult held by:

Discipline	Sk. Reg. No.	Signature
CIVIL	22727	
ENV	22727	

PROFESSIONAL ENGINEER
M. STYSICK
MEMBER 22727
January 21 2021
YR. MN. DAY.
SASKATCHEWAN

MPE Engineering Ltd.

ENGLISH RIVER ENTERPRISES
PROPERTY MANAGEMENT LP

WASTEWATER TREATMENT PLANT
CIVIL
UNDERGROUND PLAN

DESIGNED	I.K.	JOB	7603-002-00
DRAWN	T.D.D.	SCALE	1:500
DATE	NOVEMBER 2020	DRAWING	C1.3

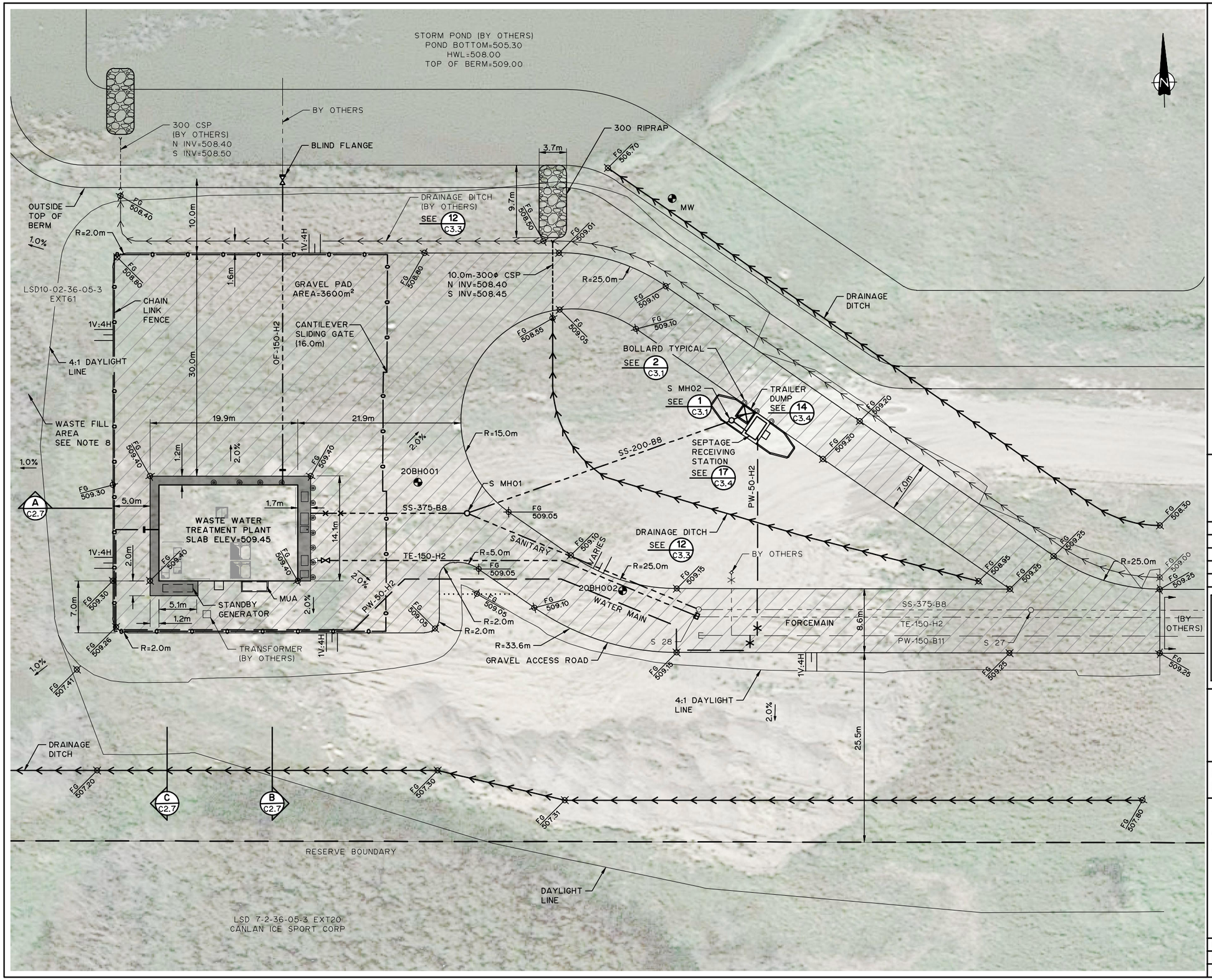

NOTES:

1. FOR INFORMATION REGARDING GENERAL NOTES, UTILITIES, SYMBOLS AND ABBREVIATIONS REFER TO THE LEGEND AND ABBREVIATIONS DRAWINGS.
2. CONTRACTOR TO EXPOSE EXISTING UTILITY LINES BY HYDROVAC EXCAVATION AND CONFIRM ELEVATIONS.
3. STRIP SITE AS NECESSARY TO PREVENT CONTAMINATION OF MATERIALS.
4. PROTECT ALL EXISTING SITE FEATURES UNLESS OTHERWISE NOTED.
5. ALL DISTURBED AREAS TO BE RESTORED WITH 150mm TOPSOIL & SEED UNLESS OTHERWISE NOTED.
6. ALL GRADES SHOWN ARE TO FINISHED GRADE.
7. UNSUITABLE MATERIAL TO BE REMOVED AND DISPOSED OF BY CONTRACTOR.
8. CONTRACTOR TO BLEND WASTE FILL AREA AND ENSURE POSITIVE DRAINAGE.

20BHXXX	BOREHOLE NUMBER
MW	MONITORING WELL

THIS DRAWING MAY HAVE BEEN MODIFIED FROM ITS ORIGINAL SIZE. ALL SCALE NOTATIONS INDICATED ARE BASED ON 11"x17" FORMAT DRAWINGS

ISSUE	YY-MM-DD	REVISION
2	21-01-15	FOR CONSTRUCTION
1	20-10-15	FOR TENDER

Association of Professional Engineers & Geoscientists of Saskatchewan
CERTIFICATE OF AUTHORIZATION
MPE Engineering Ltd.
Number C1334
Permission to Consult held by:

Discipline	Sk. Reg. No.	Signature
CIVIL	22727	
ENV	22727	

PROFESSIONAL ENGINEER
M. J. STUSICK
MEMBER 22727
January 21 2021
YR. MN. DAY.
SASKATCHEWAN

MPE Engineering Ltd.

ENGLISH RIVER ENTERPRISES
PROPERTY MANAGEMENT LP

WASTEWATER TREATMENT PLANT
CIVIL
SITE GRADING PLAN

DESIGNED	I.K.	JOB	7603-002-00
DRAWN	T.D.D.	SCALE	1:500
DATE	NOVEMBER 2020	DRAWING	C1.4

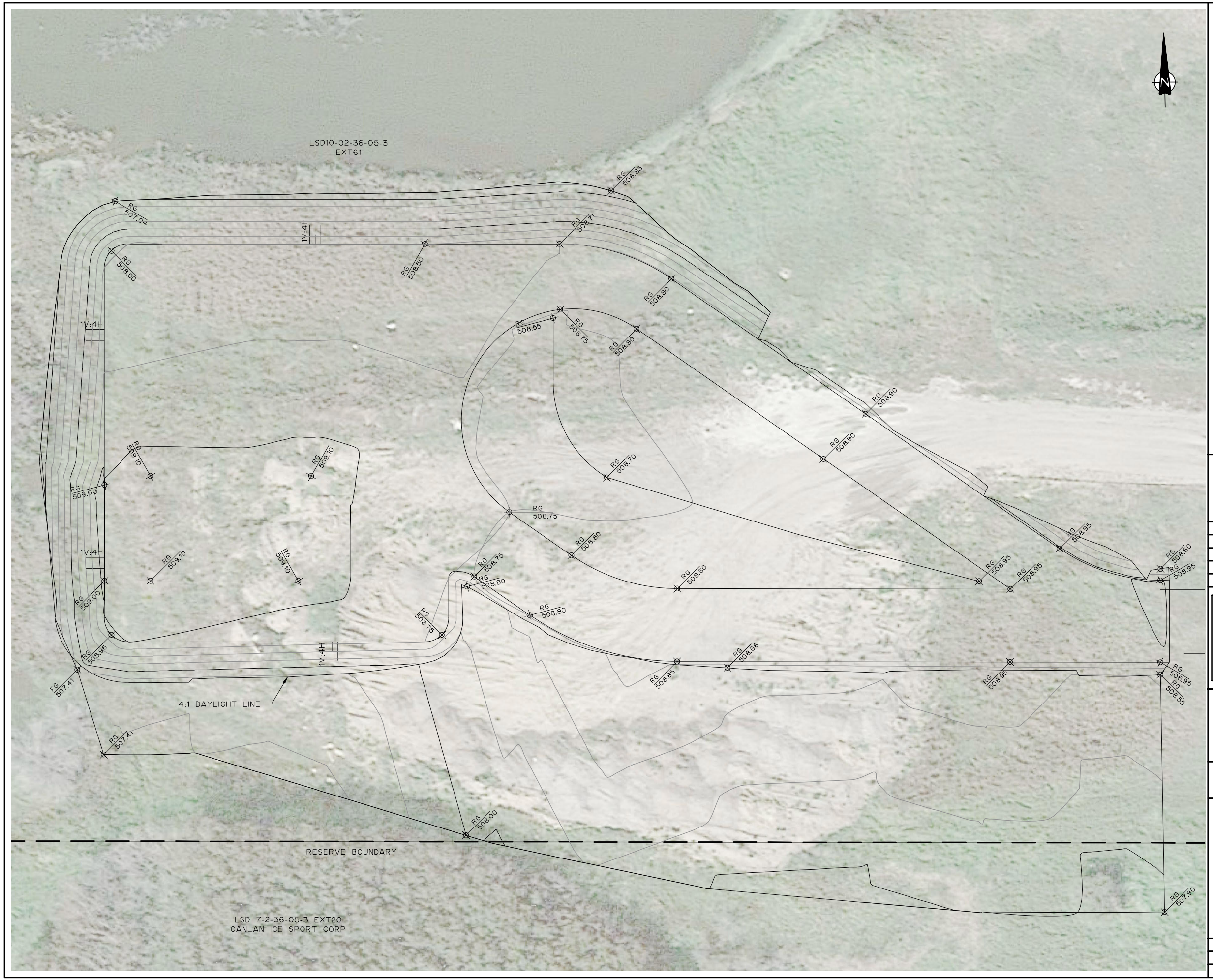

NOTES:

1. FOR INFORMATION REGARDING GENERAL NOTES, UTILITIES, SYMBOLS AND ABBREVIATIONS REFER TO THE LEGEND AND ABBREVIATIONS DRAWINGS.
2. CONTRACTOR TO EXPOSE EXISTING UTILITY LINES BY HYDROVAC EXCAVATION AND CONFIRM ELEVATIONS.
3. STRIP SITE AS NECESSARY TO PREVENT CONTAMINATION OF MATERIALS. TOPSOIL TO BE STRIPPED AND STOCKPILED PRIOR TO PLACEMENT OF COMPACTED FILL.
4. PROTECT ALL EXISTING SITE FEATURES UNLESS OTHERWISE NOTED.
5. COMPACTED FILL TO 98% OF MAXIMUM DRY DENSITY AND -1% TO +2% OF OPTIMUM MOISTURE CONTENT.
6. ALL GRADES SHOWN ARE TO ROUGH GRADE.
7. UNSUITABLE MATERIAL TO BE REMOVED AND DISPOSED OF BY CONTRACTOR.

THIS DRAWING MAY HAVE BEEN MODIFIED FROM ITS ORIGINAL SIZE. ALL SCALE NOTATIONS INDICATED ARE BASED ON 11"x17" FORMAT DRAWINGS

ISSUE	YY-MM-DD	REVISION
2	21-01-15	FOR CONSTRUCTION
1	20-10-15	FOR TENDER

Association of Professional Engineers & Geoscientists of Saskatchewan
CERTIFICATE OF AUTHORIZATION
MPE Engineering Ltd.
Number C1334
Permission to Consult held by:

Discipline	Sk. Reg. No.	Signature
CIVIL	22727	
ENV	22727	

PROFESSIONAL ENGINEER
M. J. STOSICK
MEMBER 22727
January 21 2021
YR. MN. DAY
SASKATCHEWAN

MPE Engineering Ltd.

ENGLISH RIVER ENTERPRISES
PROPERTY MANAGEMENT LP

WASTEWATER TREATMENT PLANT
CIVIL
ROUGH GRADING PLAN
(BY OTHERS)

DESIGNED	I.K.	JOB	7603-002-00
DRAWN	T.D.D.	SCALE	1:500
DATE	NOVEMBER 2020	DRAWING	C1.5

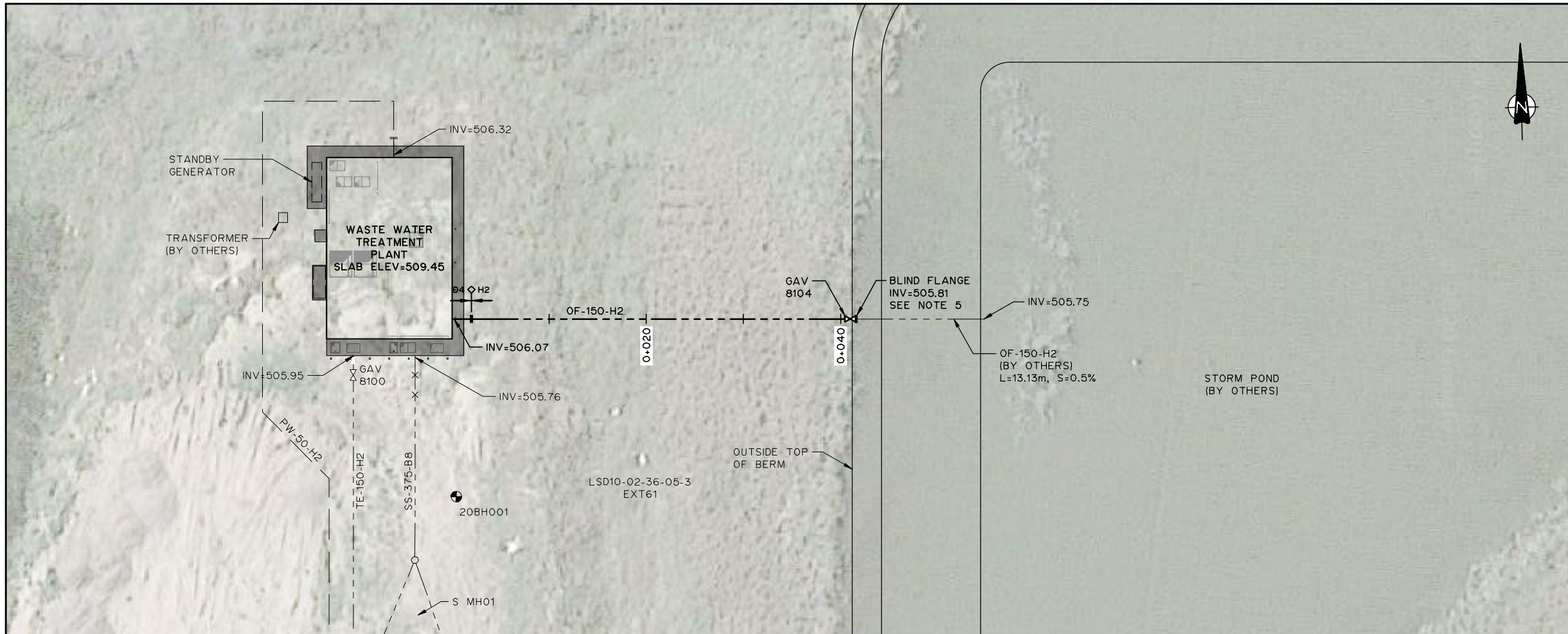

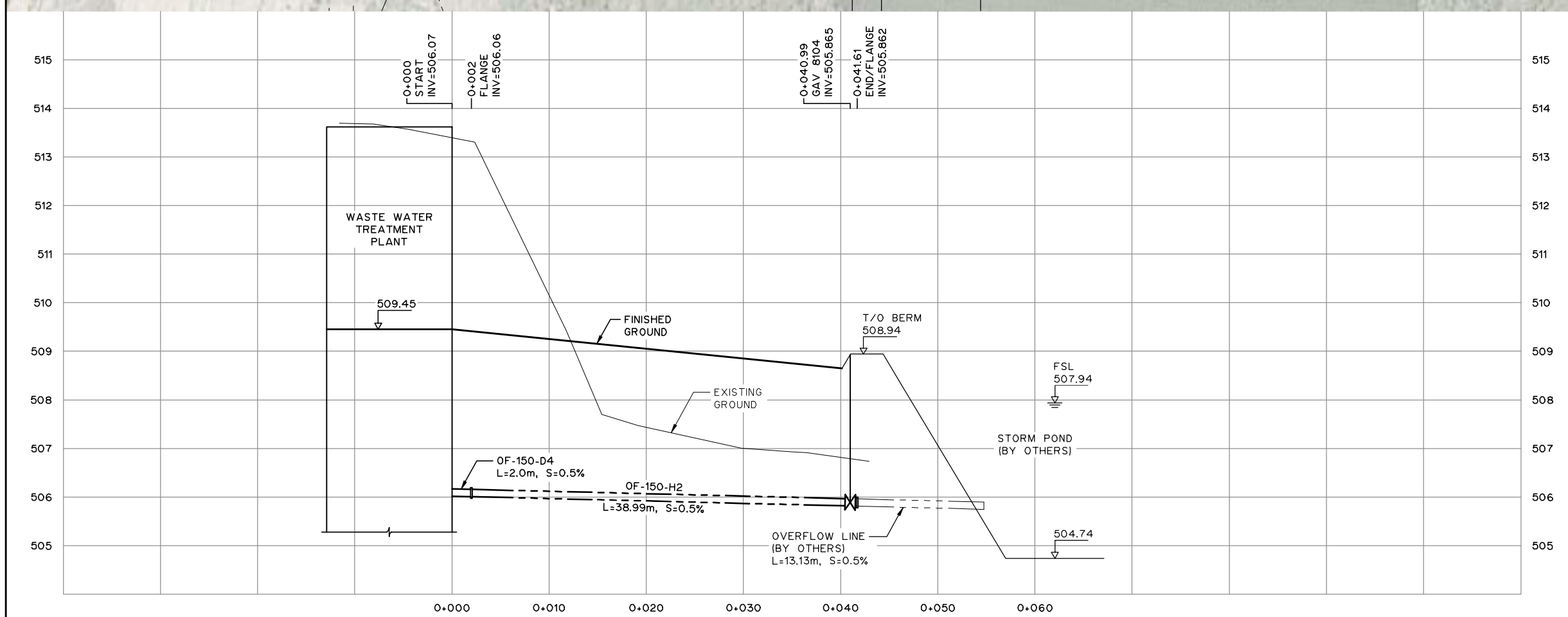

NOTES:

1. FOR INFORMATION REGARDING GENERAL NOTES, UTILITIES, SYMBOLS AND ABBREVIATIONS REFER TO THE LEGEND AND ABBREVIATIONS DRAWINGS.
2. CONTRACTOR TO EXPOSE EXISTING UTILITY LINES BY HYDROVAC EXCAVATION AND CONFIRM ELEVATIONS.
3. STRIP SITE AS NECESSARY TO PREVENT CONTAMINATION OF MATERIALS.
4. PROTECT ALL EXISTING SITE FEATURES UNLESS OTHERWISE NOTED.
5. CONTRACTOR TO INSTALL BLIND FLANGE.

THIS DRAWING MAY HAVE BEEN MODIFIED FROM ITS ORIGINAL SIZE. ALL SCALE NOTATIONS INDICATED ARE BASED ON 11"x17" FORMAT DRAWINGS

ISSUE	YY-MM-DD	REVISION
2	21-01-15	FOR CONSTRUCTION
1	20-10-15	FOR TENDER

Association of Professional Engineers & Geoscientists of Saskatchewan
CERTIFICATE OF AUTHORIZATION
MPE Engineering Ltd.
Number C1334
Permission to Consult held by:

Discipline	Sk. Reg. No.	Signature
CIVIL	22727	
ENV	22727	

PROFESSIONAL ENGINEER
M. STUSICK
MEMBER 22727
January 21 2021
YR. MN. DAY
SASKATCHEWAN

MPE Engineering Ltd.

ENGLISH RIVER ENTERPRISES
PROPERTY MANAGEMENT LP

WASTEWATER TREATMENT PLANT
CIVIL
PLAN PROFILE
STATION 0+000 TO 0+041.6

DESIGNED	I.K.	JOB	7603-002-00
DRAWN	T.D.D.	SCALE	H 1:500 V 1:100
DATE	NOVEMBER 2020	DRAWING	C2.1

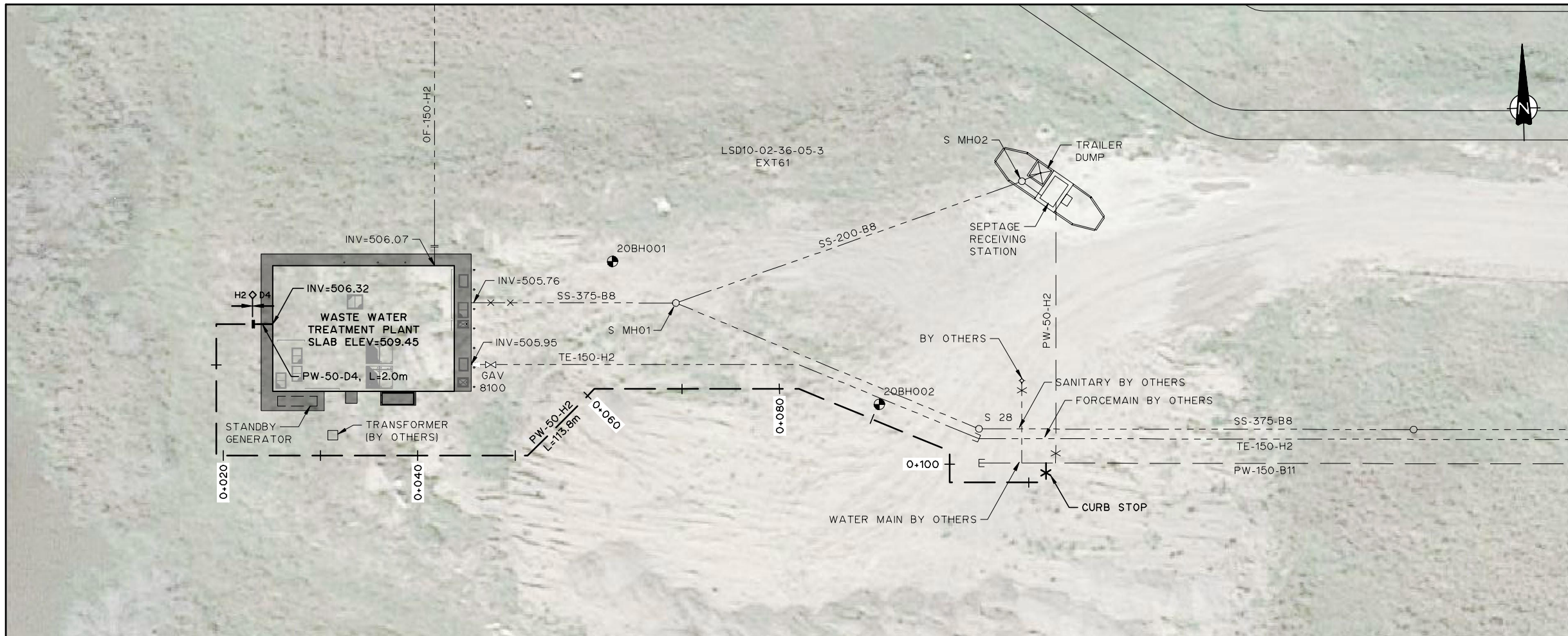

NOTES:

1. FOR INFORMATION REGARDING GENERAL NOTES, UTILITIES, SYMBOLS AND ABBREVIATIONS REFER TO THE LEGEND AND ABBREVIATIONS DRAWINGS.
2. CONTRACTOR TO EXPOSE EXISTING UTILITY LINES BY HYDROVAC EXCAVATION AND CONFIRM ELEVATIONS.
3. STRIP SITE AS NECESSARY TO PREVENT CONTAMINATION OF MATERIALS.
4. PROTECT ALL EXISTING SITE FEATURES UNLESS OTHERWISE NOTED.

20BHXXX BOREHOLE NUMBER

THIS DRAWING MAY HAVE BEEN MODIFIED FROM ITS ORIGINAL SIZE. ALL SCALE NOTATIONS INDICATED ARE BASED ON 11"x17" FORMAT DRAWINGS

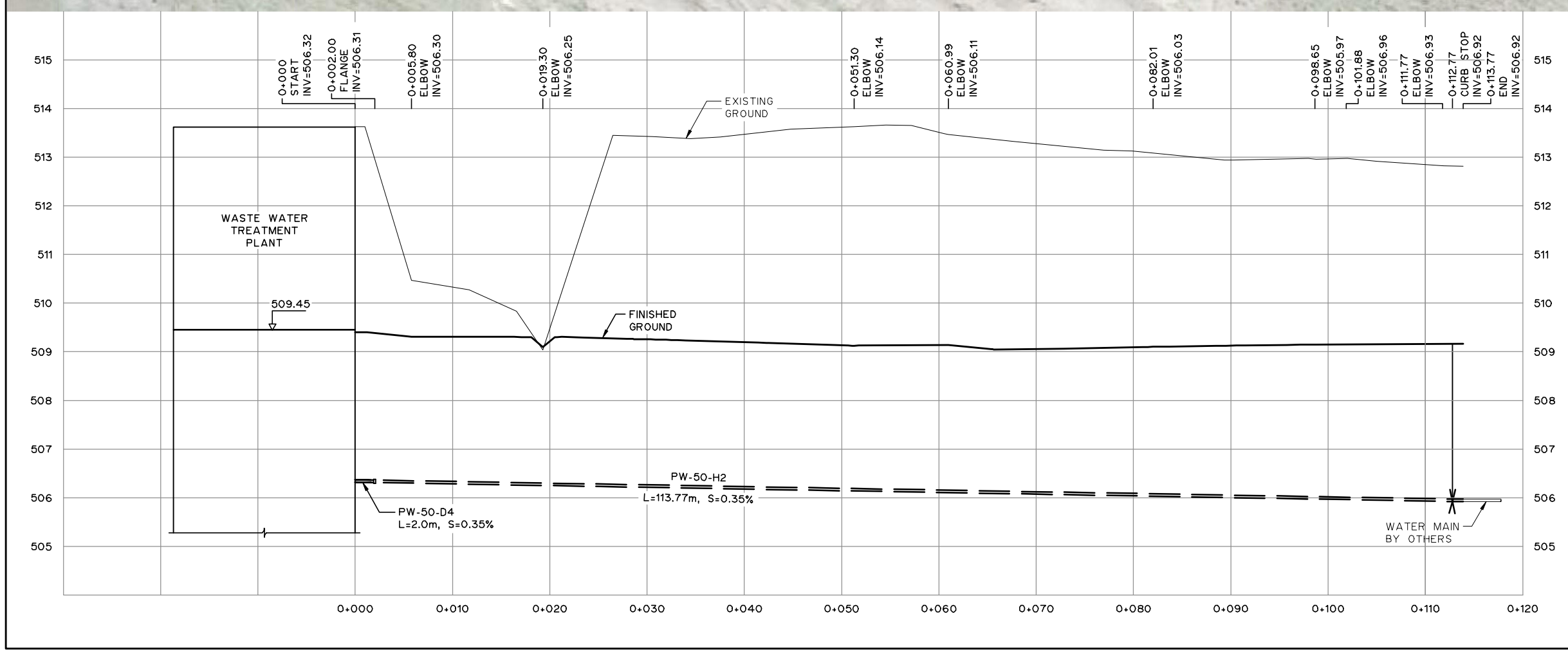

ISSUE	YY-MM-DD	REVISION
2	21-01-15	FOR CONSTRUCTION
1	20-10-15	FOR TENDER

Association of Professional Engineers & Geoscientists of Saskatchewan
CERTIFICATE OF AUTHORIZATION
MPE Engineering Ltd.
Number C1334
Permission to Consult held by:

Discipline	Sk. Reg. No.	Signature
CIVIL	22727	
ENV	22727	

PROFESSIONAL ENGINEER
M. J. STYSICK
MEMBER 22727
January 21 2021
YR. MN. DAY.
SASKATCHEWAN

MPE Engineering Ltd.

ENGLISH RIVER ENTERPRISES
PROPERTY MANAGEMENT LP

WASTEWATER TREATMENT PLANT
CIVIL
PLAN PROFILE
STATION 0+000 TO 0+113.8

DESIGNED	I.K.	JOB	7603-002-00
DRAWN	T.D.D.	SCALE	H 1:500 V 1:100
DATE	NOVEMBER 2020	DRAWING	C2.2

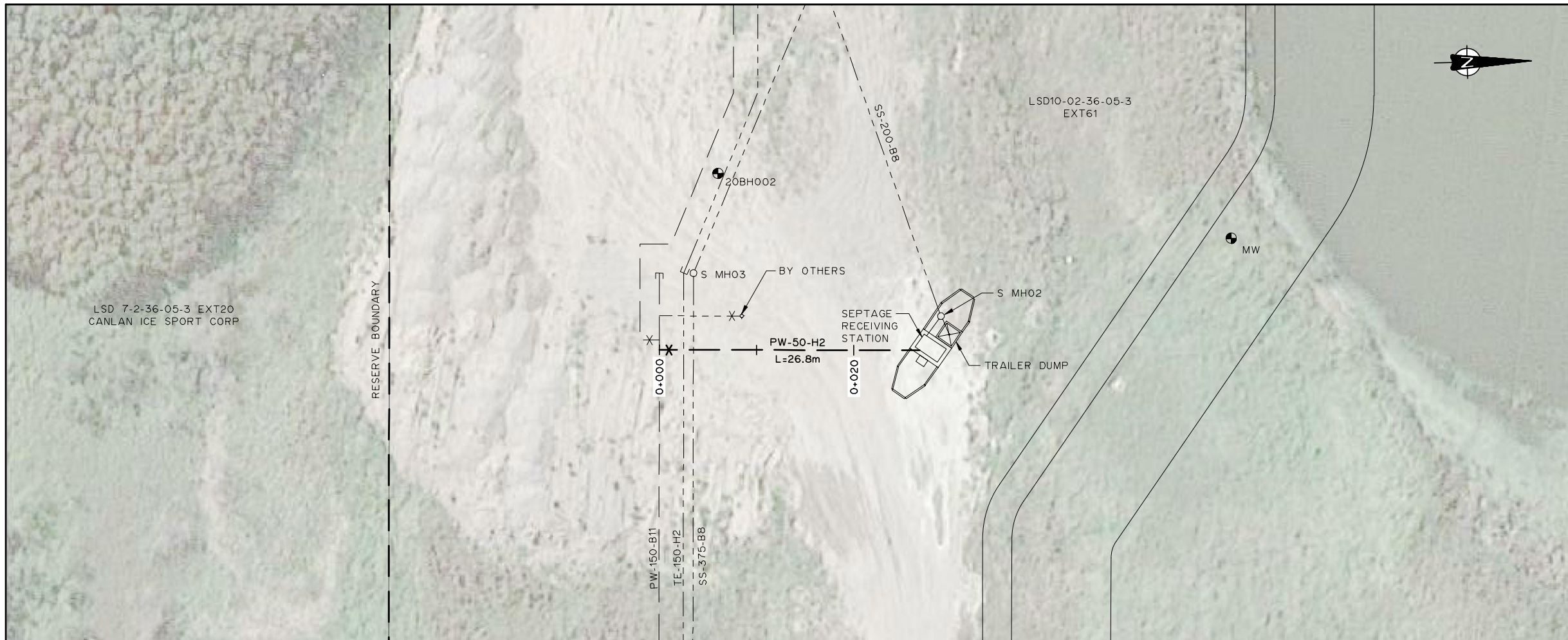

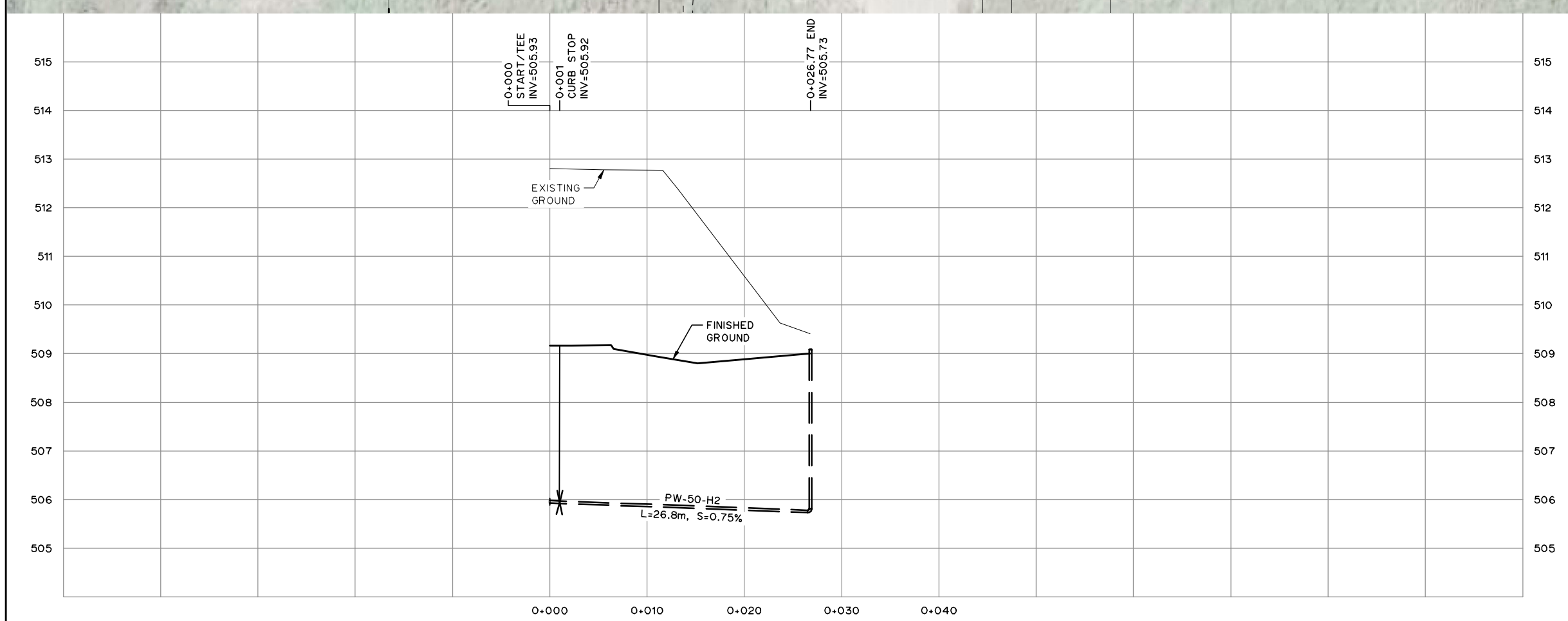

NOTES:

1. FOR INFORMATION REGARDING GENERAL NOTES, UTILITIES, SYMBOLS AND ABBREVIATIONS REFER TO THE LEGEND AND ABBREVIATIONS DRAWINGS.
2. CONTRACTOR TO EXPOSE EXISTING UTILITY LINES BY HYDROVAC EXCAVATION AND CONFIRM ELEVATIONS.
3. STRIP SITE AS NECESSARY TO PREVENT CONTAMINATION OF MATERIALS.
4. PROTECT ALL EXISTING SITE FEATURES UNLESS OTHERWISE NOTED.

20BHXXX BOREHOLE NUMBER

THIS DRAWING MAY HAVE BEEN MODIFIED FROM ITS ORIGINAL SIZE. ALL SCALE NOTATIONS INDICATED ARE BASED ON 11"x17" FORMAT DRAWINGS

ISSUE	YY-MM-DD	REVISION
2	21-01-15	FOR CONSTRUCTION
1	20-10-15	FOR TENDER

Association of Professional Engineers & Geoscientists of Saskatchewan
CERTIFICATE OF AUTHORIZATION
MPE Engineering Ltd.
Number C1334
Permission to Consult held by:

Discipline	Sk. Reg. No.	Signature
CIVIL	22727	
ENV	22727	

PROFESSIONAL ENGINEER
M.J. STUSICK
MEMBER 22727
January 21 2021
YR. MN. DAY
SASKATCHEWAN

MPE Engineering Ltd.

ENGLISH RIVER ENTERPRISES
PROPERTY MANAGEMENT LP

WASTEWATER TREATMENT PLANT
CIVIL
PLAN PROFILE
STATION 0+000 TO 0+026.8

DESIGNED	I.K.	JOB	7603-002-00
DRAWN	T.D.D.	SCALE	H 1:500 V 1:100
DATE	NOVEMBER 2020	DRAWING	C2.3

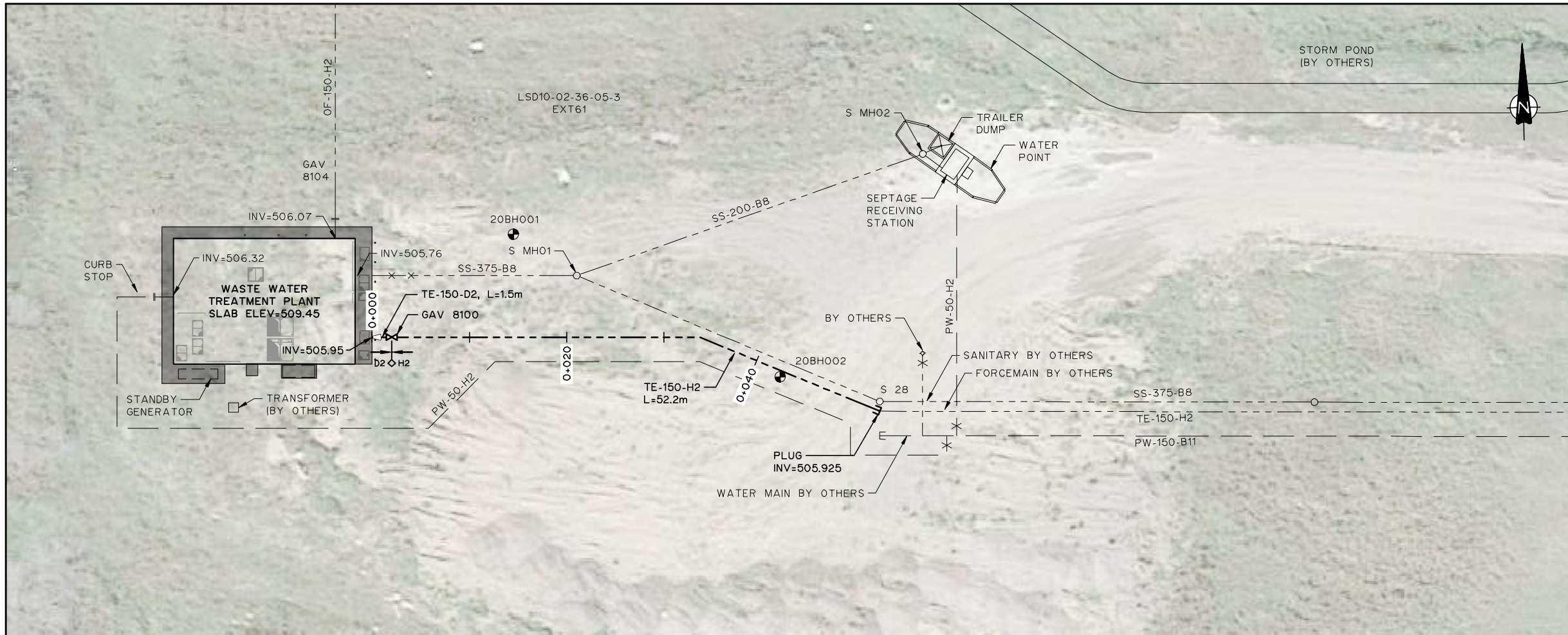

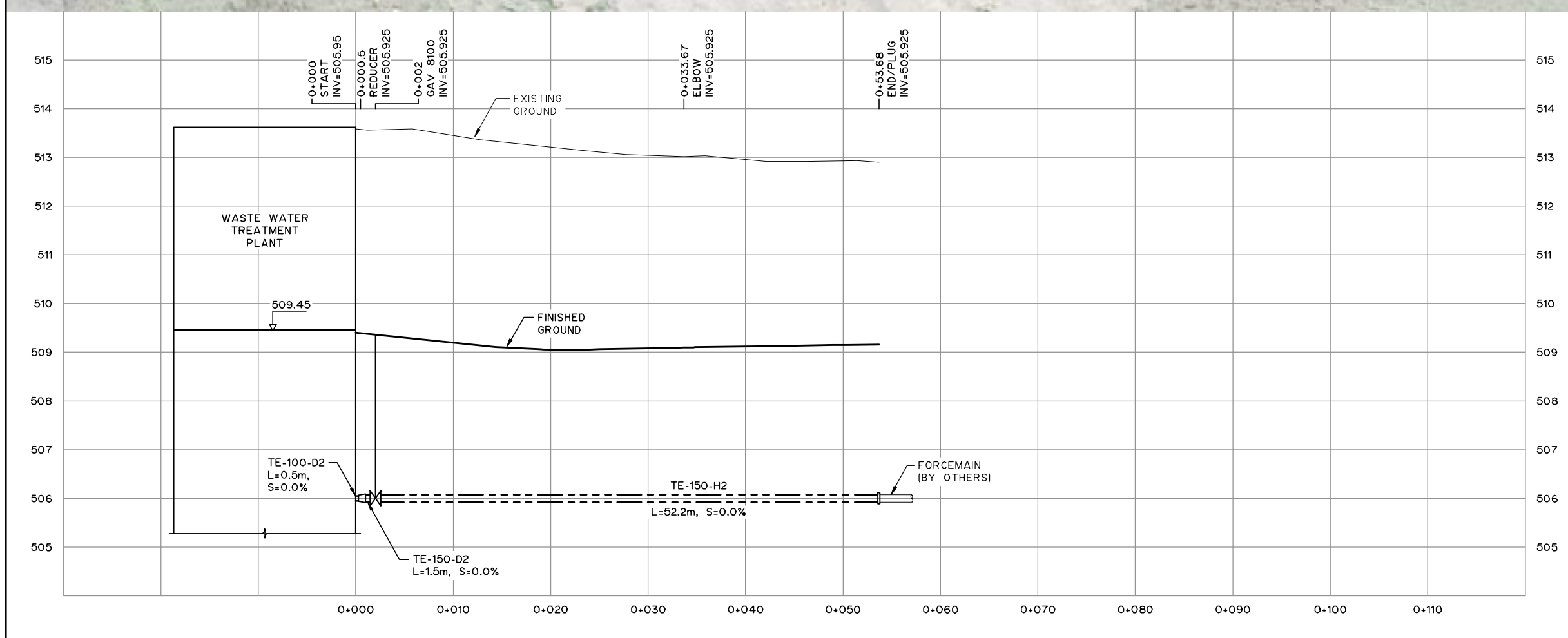

NOTES:

1. FOR INFORMATION REGARDING GENERAL NOTES, UTILITIES, SYMBOLS AND ABBREVIATIONS REFER TO THE LEGEND AND ABBREVIATIONS DRAWINGS.
2. CONTRACTOR TO EXPOSE EXISTING UTILITY LINES BY HYDROVAC EXCAVATION AND CONFIRM ELEVATIONS.
3. STRIP SITE AS NECESSARY TO PREVENT CONTAMINATION OF MATERIALS.
4. PROTECT ALL EXISTING SITE FEATURES UNLESS OTHERWISE NOTED.

20BHXXX BOREHOLE NUMBER

THIS DRAWING MAY HAVE BEEN MODIFIED FROM ITS ORIGINAL SIZE. ALL SCALE NOTATIONS INDICATED ARE BASED ON 11"x17" FORMAT DRAWINGS

ISSUE	YY-MM-DD	REVISION
2	21-01-15	FOR CONSTRUCTION
1	20-10-15	FOR TENDER

Association of Professional Engineers & Geoscientists of Saskatchewan
CERTIFICATE OF AUTHORIZATION
MPE Engineering Ltd.
Number C1334
Permission to Consult held by:

Discipline	Sk. Reg. No.	Signature
CIVIL	22727	
ENV	22727	

PROFESSIONAL ENGINEER
M. STUSICK
MEMBER 22727
January 21 2021
YR. MN. DAY
SASKATCHEWAN

MPE Engineering Ltd.

ENGLISH RIVER ENTERPRISES
PROPERTY MANAGEMENT LP

WASTEWATER TREATMENT PLANT
CIVIL
PLAN PROFILE
STATION 0+000 TO 0+53.7

DESIGNED	I.K.	JOB	7603-002-00
DRAWN	T.D.D.	SCALE	H 1:500 V 1:100
DATE	NOVEMBER 2020	DRAWING	C2.4

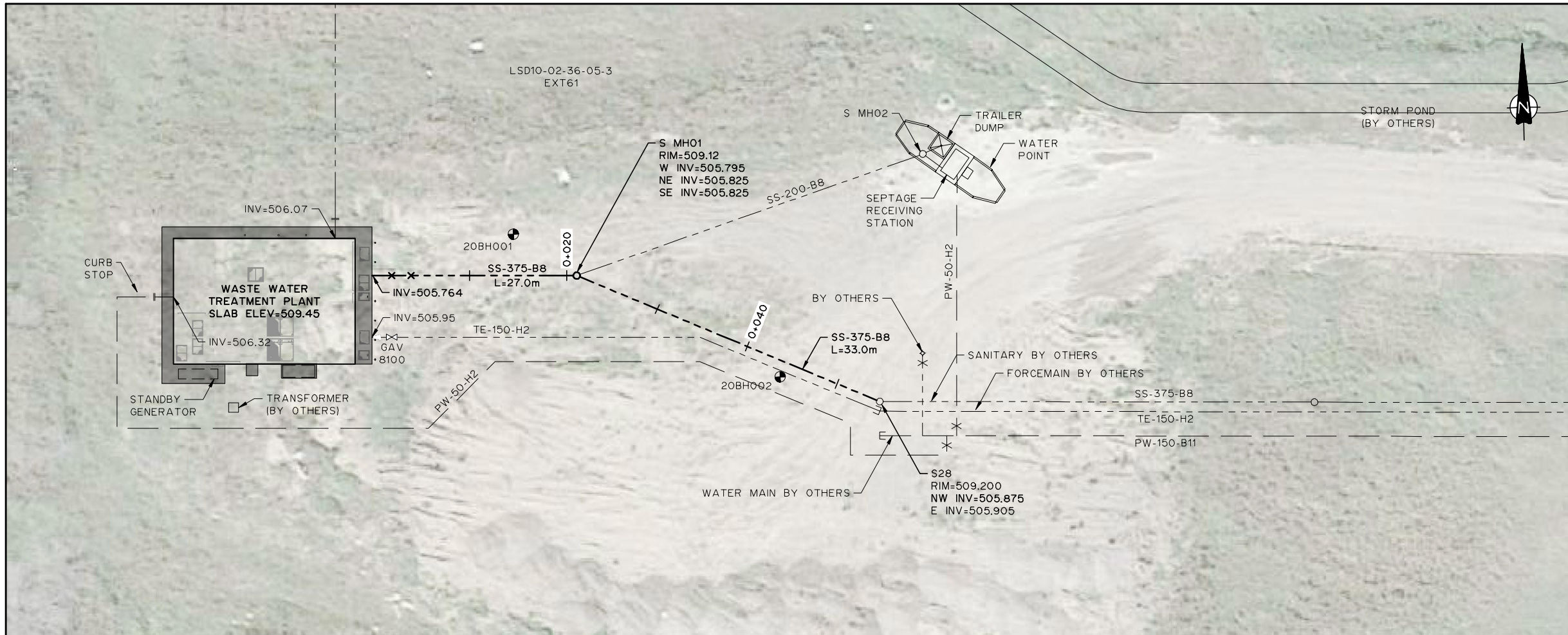

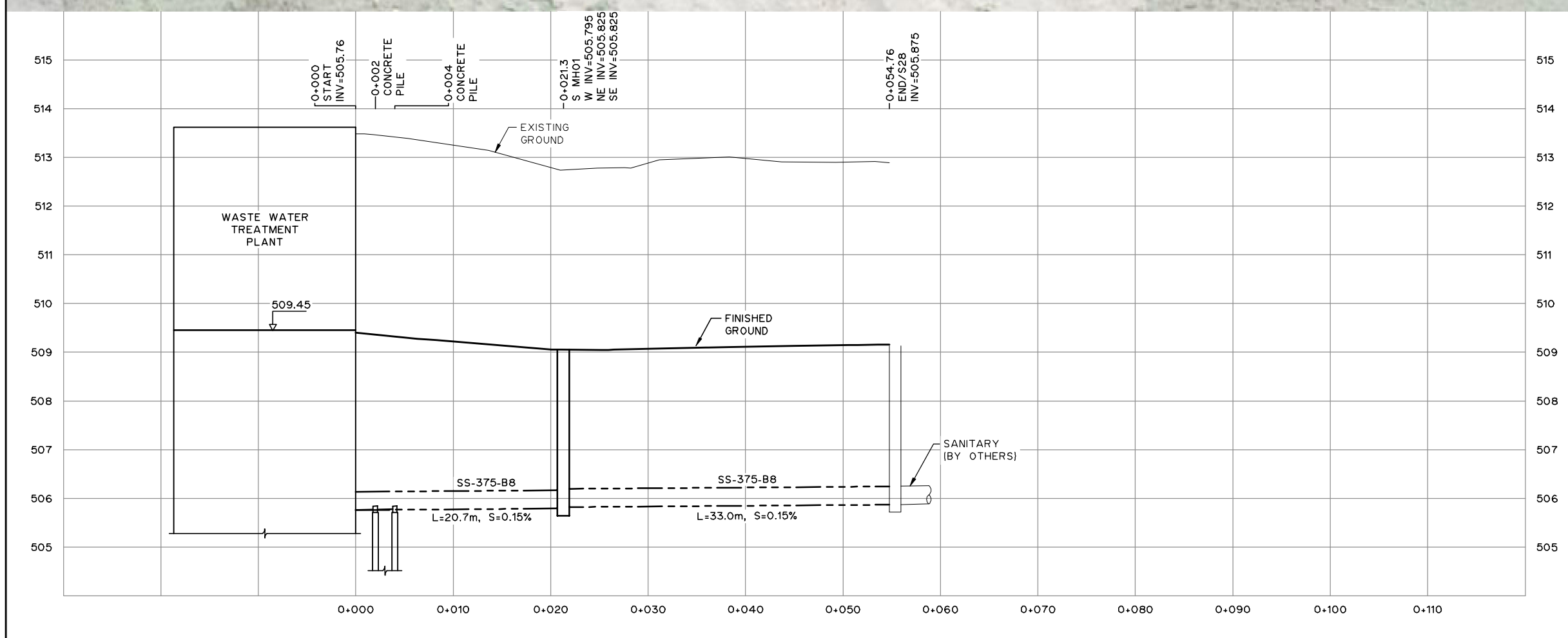

NOTES:

1. FOR INFORMATION REGARDING GENERAL NOTES, UTILITIES, SYMBOLS AND ABBREVIATIONS REFER TO THE LEGEND AND ABBREVIATIONS DRAWINGS.
2. CONTRACTOR TO EXPOSE EXISTING UTILITY LINES BY HYDROVAC EXCAVATION AND CONFIRM ELEVATIONS.
3. STRIP SITE AS NECESSARY TO PREVENT CONTAMINATION OF MATERIALS.
4. PROTECT ALL EXISTING SITE FEATURES UNLESS OTHERWISE NOTED.

20BHXXX BOREHOLE NUMBER

THIS DRAWING MAY HAVE BEEN MODIFIED FROM ITS ORIGINAL SIZE. ALL SCALE NOTATIONS INDICATED ARE BASED ON 11"x17" FORMAT DRAWINGS

ISSUE	YY-MM-DD	REVISION
2	21-01-15	FOR CONSTRUCTION
1	20-10-15	FOR TENDER

Association of Professional Engineers & Geoscientists of Saskatchewan
CERTIFICATE OF AUTHORIZATION
MPE Engineering Ltd.
Number C1334
Permission to Consult held by:

Discipline	Sk. Reg. No.	Signature
CIVIL	22727	
ENV	22727	

PROFESSIONAL ENGINEER
M. STUSICK
MEMBER 22727
January 21 2021
YR. MN. DAY
SASKATCHEWAN

MPE Engineering Ltd.

ENGLISH RIVER ENTERPRISES
PROPERTY MANAGEMENT LP

WASTEWATER TREATMENT PLANT
CIVIL
PLAN PROFILE
STATION 0+000 TO 0+054.8

DESIGNED	I.K.	JOB	7603-002-00
DRAWN	T.D.D.	SCALE	H 1:500 V 1:100
DATE	NOVEMBER 2020	DRAWING	C2.5

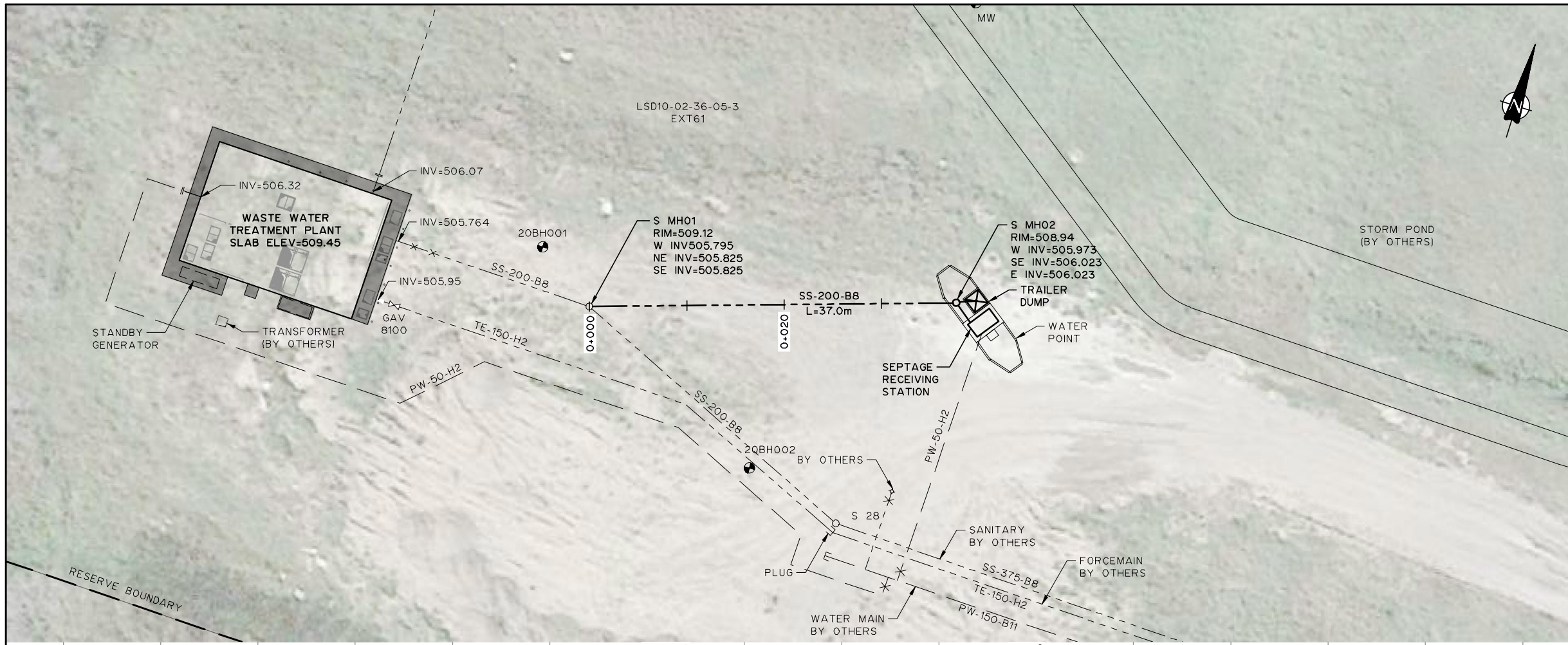

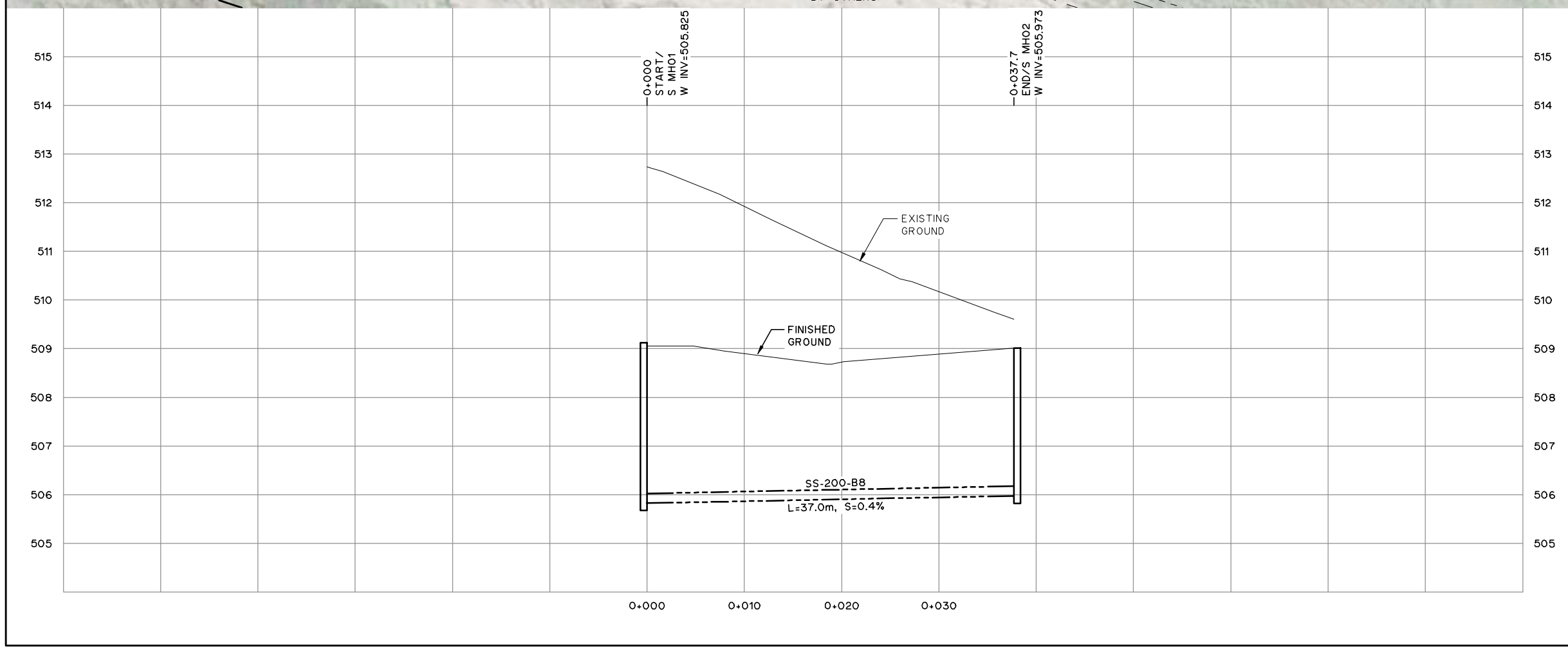

NOTES:

1. FOR INFORMATION REGARDING GENERAL NOTES, UTILITIES, SYMBOLS AND ABBREVIATIONS REFER TO THE LEGEND AND ABBREVIATIONS DRAWINGS.
2. CONTRACTOR TO EXPOSE EXISTING UTILITY LINES BY HYDROVAC EXCAVATION AND CONFIRM ELEVATIONS.
3. STRIP SITE AS NECESSARY TO PREVENT CONTAMINATION OF MATERIALS.
4. PROTECT ALL EXISTING SITE FEATURES UNLESS OTHERWISE NOTED.

20BHXXX BOREHOLE NUMBER

THIS DRAWING MAY HAVE BEEN MODIFIED FROM ITS ORIGINAL SIZE. ALL SCALE NOTATIONS INDICATED ARE BASED ON 11"x17" FORMAT DRAWINGS

ISSUE	YY-MM-DD	REVISION
2	21-01-15	FOR CONSTRUCTION
1	20-10-15	FOR TENDER

Association of Professional Engineers & Geoscientists of Saskatchewan
CERTIFICATE OF AUTHORIZATION
MPE Engineering Ltd.
Number C1334
Permission to Consult held by:

Discipline	Sk. Reg. No.	Signature
CIVIL	22727	
ENV	22727	

PROFESSIONAL ENGINEER
M.J. STUSICK
MEMBER 22727
January 21 2021
YR. MN. DAY
SASKATCHEWAN

MPE Engineering Ltd.

ENGLISH RIVER ENTERPRISES
PROPERTY MANAGEMENT LP

WASTEWATER TREATMENT PLANT
CIVIL
PLAN PROFILE
STATION 0+000 TO 0+37.7

DESIGNED	I.K.	JOB	7603-002-00
DRAWN	T.D.D.	SCALE	H 1:500 V 1:100
DATE	NOVEMBER 2020	DRAWING	C2.6

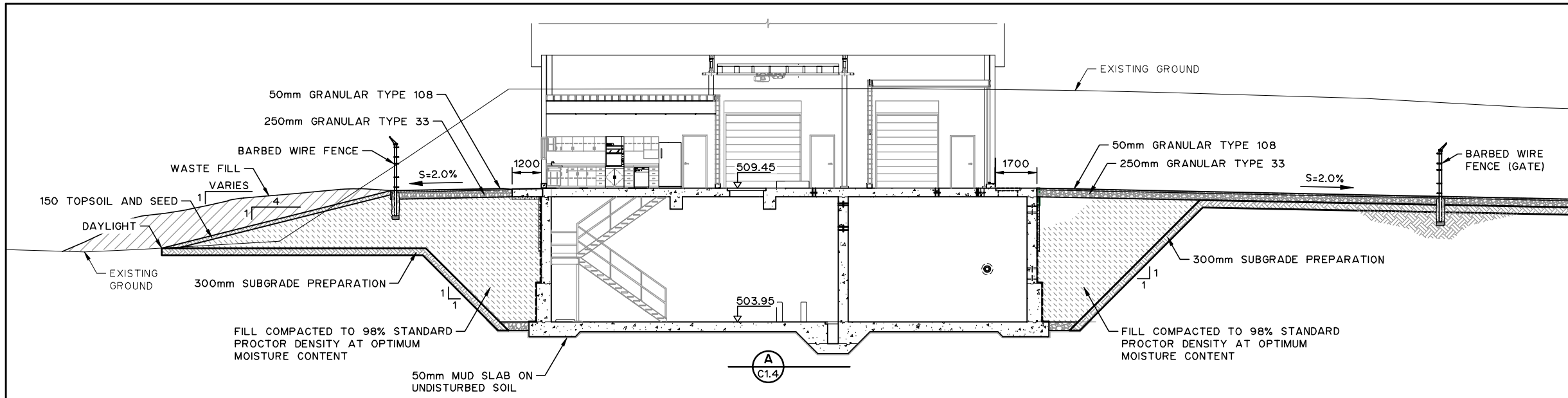

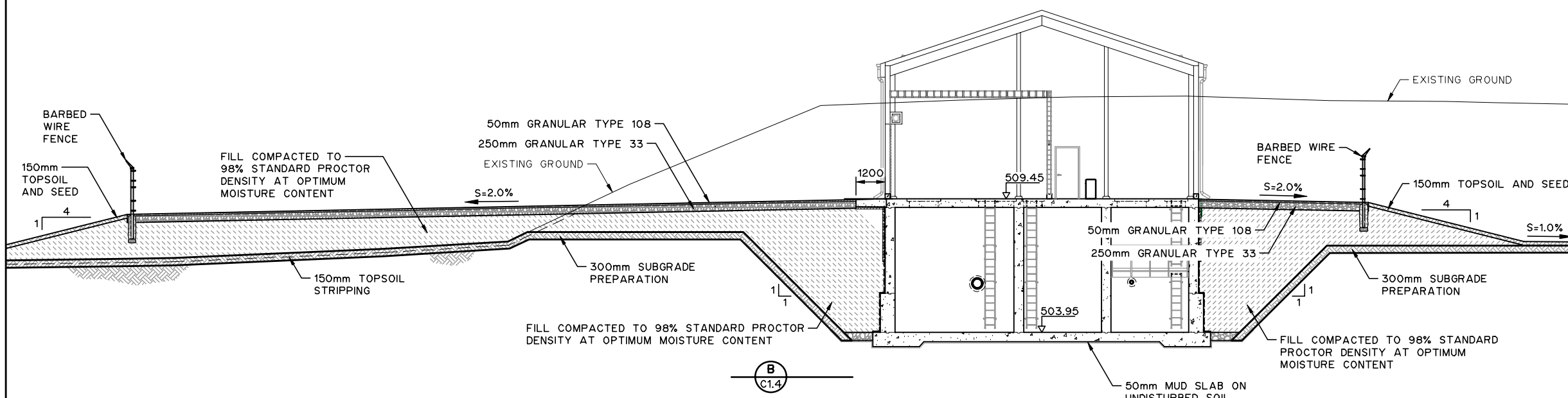

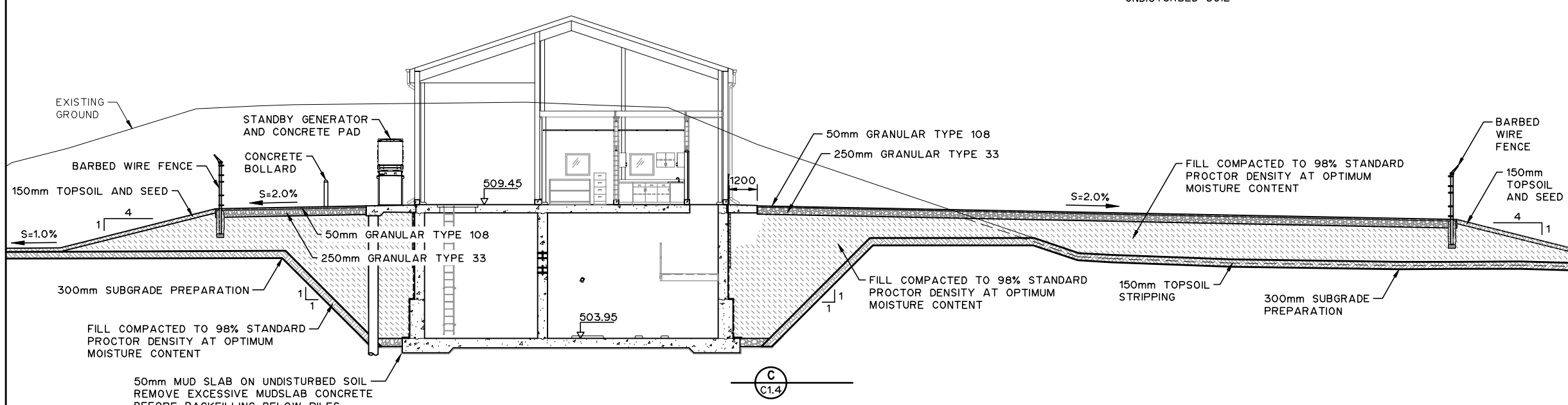

NOTES:

1. FOR INFORMATION REGARDING GENERAL NOTES, UTILITIES, SYMBOLS AND ABBREVIATIONS REFER TO THE LEGEND AND ABBREVIATIONS DRAWINGS.

THIS DRAWING MAY HAVE BEEN MODIFIED FROM ITS ORIGINAL SIZE. ALL SCALE NOTATIONS INDICATED ARE BASED ON 11"x17" FORMAT DRAWINGS

ISSUE	YY-MM-DD	REVISION
2	21-01-15	FOR CONSTRUCTION
1	20-10-15	FOR TENDER

Association of Professional Engineers & Geoscientists of Saskatchewan
CERTIFICATE OF AUTHORIZATION
MPE Engineering Ltd.
Number C1334
Permission to Consult held by:

Discipline	Sk. Reg. No.	Signature
CIVIL	22727	
ENV	22727	

PROFESSIONAL ENGINEER
M.J. STUSICK
MEMBER 22727
January 21 2021
YR. MN. DAY
SASKATCHEWAN

MPE Engineering Ltd.

ENGLISH RIVER ENTERPRISES
PROPERTY MANAGEMENT LP

WASTEWATER TREATMENT PLANT
CIVIL
SITE SECTIONS

DESIGNED	I.K.	JOB	7603-002-00
DRAWN	T.D.D.	SCALE	1:200
DATE	NOVEMBER 2020	DRAWING	C2.7

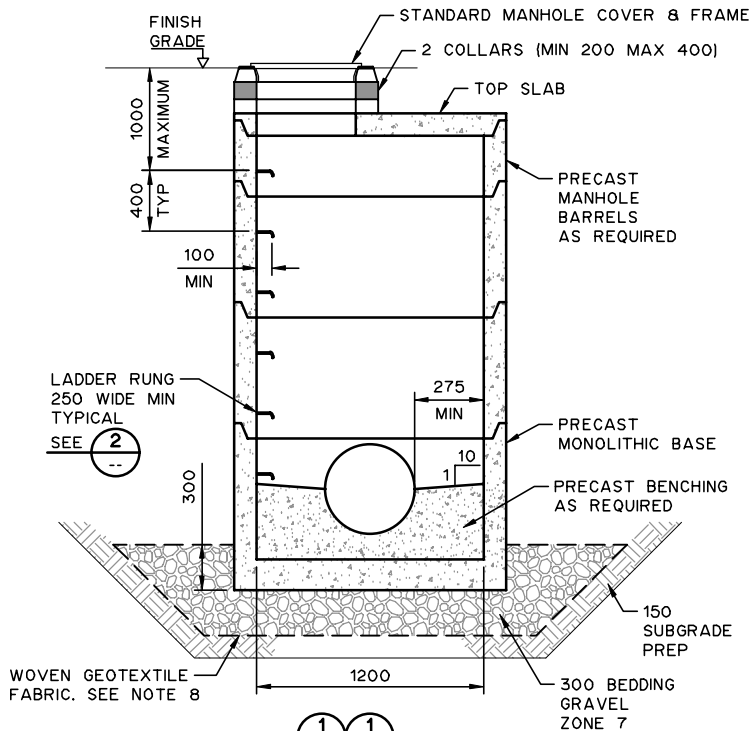

1 C1.3 1 C1.4

STANDARD PRECAST MANHOLE
NTS

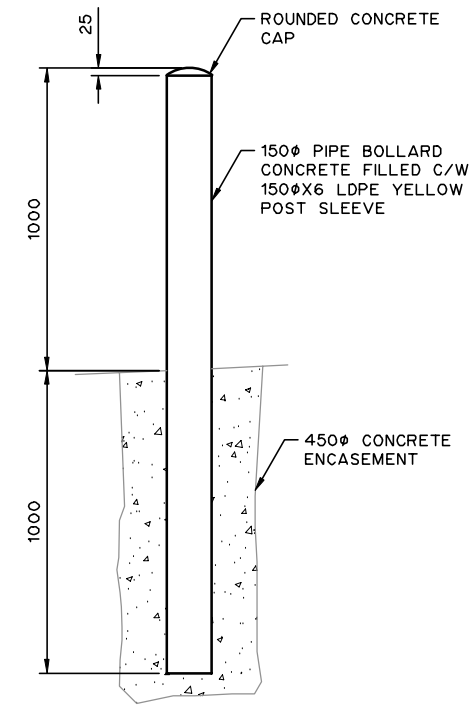

2 --

TYPICAL BOLLARD DETAIL
1:25

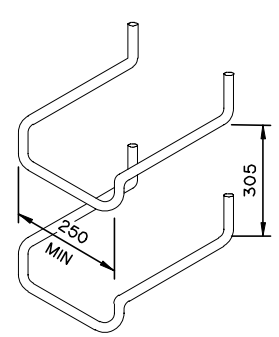

3 --

TYPICAL LADDER RUNG DETAIL
NTS

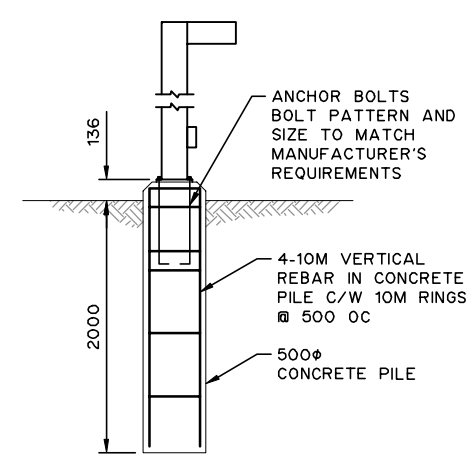

4 --

TYPICAL LIGHT STANDARD DETAIL
NTS

NOTES:

1. ALL ELEVATIONS AND STATIONS ARE IN METERS UNLESS NOTED OTHERWISE. ALL DIMENSIONS AND PIPE SIZES ARE IN MILLIMETRES UNLESS NOTED OTHERWISE.
2. CONTRACTOR TO VERIFY ALL DIMENSIONS WITH GENERATOR SUPPLIER AND ENGINEER.
3. TOPSOIL ELEVATION MAY VARY BETWEEN 50mm MINIMUM TO 150mm MAXIMUM BELOW TOP OF CONCRETE PAD.
4. CONTRACTOR TO INSTALL LIGHT STANDARD.
5. 20 CHAMFER ALL EXPOSED CORNERS.
6. PILES ARE FACTORED LOADS.
7. CONTRACTOR TO COORDINATE GENERATOR PAD CONDUIT PENETRATIONS WITH GENERATOR MANUFACTURER PRIOR TO INSTALLING CONCRETE. CABLE AND CONDUITS ARE PERMITTED TO BE INSTALLED TOGETHER IN ONE TRENCH, PROVIDE SETTLING LOOPS FOR ALL SLAB PENETRATIONS.
8. WOVEN GEOTEXTILE TO BE WRAPPED AROUND BEDDING GRAVEL.
9. 100Φ WEEPING TILE C/W 150-200Φ WASHED ROCK AND GEOTEXTILE FABRIC FILTER.
10. 45° ELBOW REQUIRED IF INTERNAL DROP FALLS ON CONCRETE BENCHING.

THIS DRAWING MAY HAVE BEEN MODIFIED FROM ITS ORIGINAL SIZE. ALL SCALE NOTATIONS INDICATED ARE BASED ON 11"x17" FORMAT DRAWINGS

ISSUE	YY-MM-DD	REVISION
2	21-01-15	FOR CONSTRUCTION
1	20-10-15	FOR TENDER

Association of Professional Engineers & Geoscientists of Saskatchewan
CERTIFICATE OF AUTHORIZATION
MPE Engineering Ltd.
Number C1334
Permission to Consult held by:

Discipline	Sk. Reg. No.	Signature
CIVIL	22727	
ENV	22727	

PROFESSIONAL ENGINEER
M. STUSICK
MEMBER 22727
January 21 2021
YR. MN. DAY
SASKATCHEWAN

MPE Engineering Ltd.

ENGLISH RIVER ENTERPRISES PROPERTY MANAGEMENT LP

WASTEWATER TREATMENT PLANT
CIVIL
DETAILS SHEET 1

DESIGNED	I.K.	JOB	7603-002-00
DRAWN	T.D.D.	SCALE	AS SHOWN
DATE	NOVEMBER 2020	DRAWING	C3.1

PIPE COVER (m)	MINIMUM INSULATION THICKNESS T(mm)	MINIMUM INSULATION WIDTH W=2W1+W2 (m)								
		PIPE DIAMETER 150–200mm			PIPE DIAMETER 250–300mm			PIPE DIAMETER 400mm		
		CLAY	MIX	GRAVEL	CLAY	MIX	GRAVEL	CLAY	MIX	GRAVEL
1.6–1.7	75	2.4	3.0	3.6	2.5	3.1	3.7	2.6	3.2	3.8
1.8–1.9	50	2.0	2.6	3.2	2.1	2.7	3.3	2.2	2.8	3.4
2.0–2.1	50	1.6	2.2	2.8	1.7	2.3	2.9	1.8	2.4	3.0
2.2–2.3	50	1.2	1.8	2.4	1.3	1.9	2.5	1.4	2.0	2.6
2.4–2.5	50	0.8	1.4	2.0	0.9	1.5	2.1	1.0	1.6	2.2
2.6–2.7	50	0.4	1.0	1.6	0.5	1.1	1.7	0.6	1.2	1.8
2.8–2.9	50	--	0.6	1.2	--	0.7	1.3	--	0.8	1.4
3.0–3.1	50	--	--	0.8	--	--	0.9	--	--	1.0
3.2–3.3	50	--	--	0.4	--	--	0.5	--	--	0.6

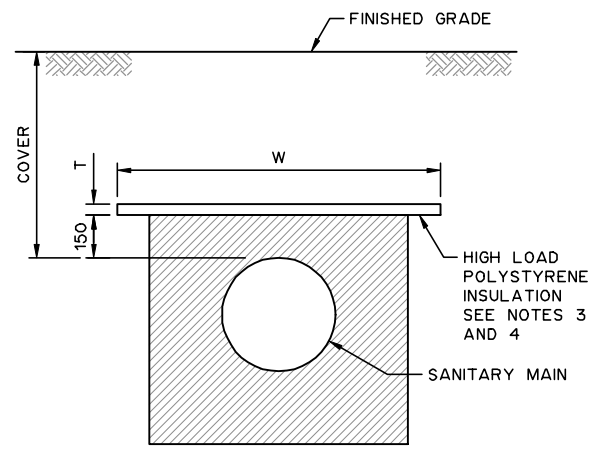

5
--

FROST PROTECTION
NTS

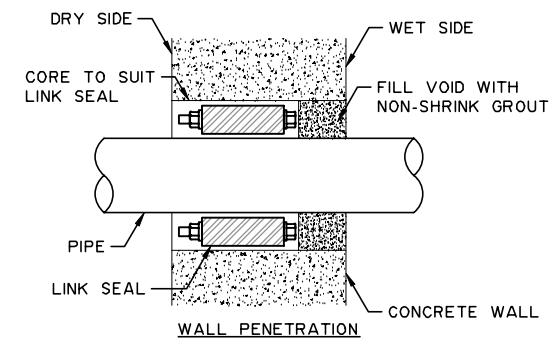

WALL PENETRATION

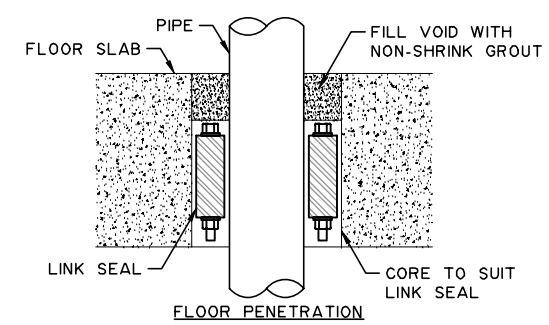

FLOOR PENETRATION

6
--

TYPICAL LINK SEAL
NTS

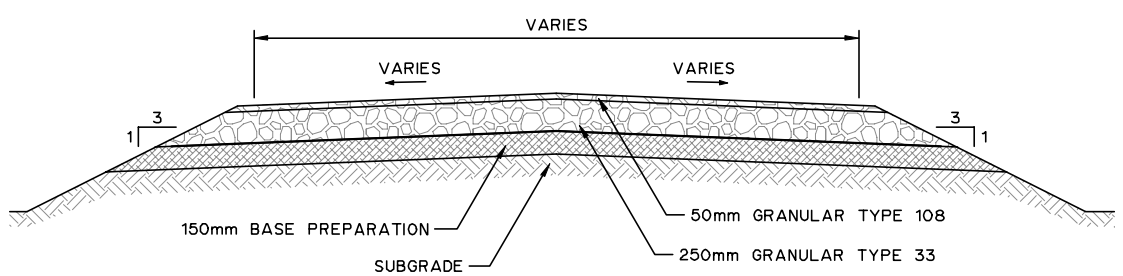

7
--

TYPICAL ROAD SECTION
NTS

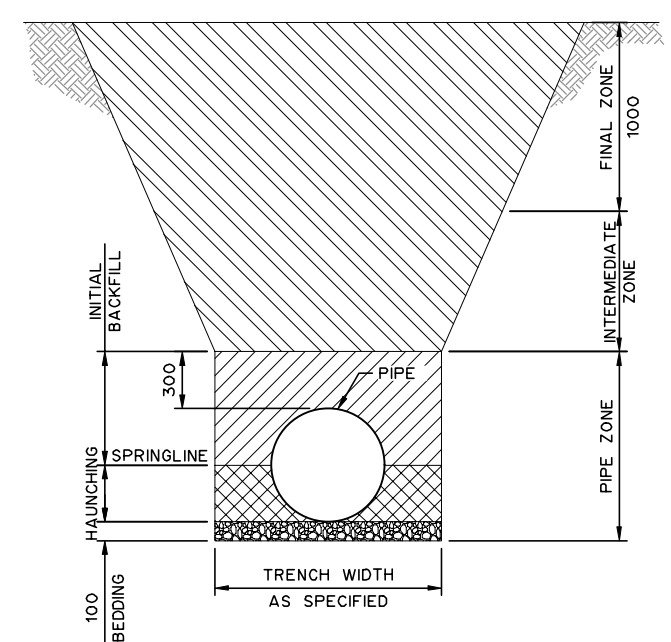

8
--

TYPICAL BACKFILL DETAIL
NTS
(SEE NOTE 5)

NON-WOVEN GEOTEXTILE FILTER FABRIC SPECIFICATIONS AND PHYSICAL PROPERTIES		
	CLASS IM 1,2	CLASS 3
GRAB STRENGTH	650 N	875 N
ELONGATION (FAILURE)	50%	50%
PUNCTURE STRENGTH	275 N	550 N
BURST STRENGTH	2.1 MPa	2.7 MPa
TRAPEZOIDAL TEAR	250 N	350 N
MINIMUM FABRIC LAP TO BE 300 mm		

WOVEN GEOTEXTILE FILTER FABRIC SPECIFICATIONS AND PHYSICAL PROPERTIES	
GRAB STRENGTH	1275 N
ELONGATION (FAILURE)	15%
PUNCTURE STRENGTH	275 N
BURST STRENGTH	3.6 MPa
TRAPEZOIDAL TEAR	475 N
MINIMUM FABRIC LAP TO BE 1000 mm	

9
--

NOTES:

1. FOR INFORMATION REGARDING GENERAL NOTES, UTILITIES, SYMBOLS, AND ABBREVIATIONS REFER TO THE LEGEND AND ABBREVIATIONS DRAWINGS.
2. ALL ELEVATIONS, STATIONS & PIPE LENGTHS ARE IN METRES AND PIPE SIZES AND DIMENSIONS ARE IN MILLIMETRES UNLESS NOTED OTHERWISE.
3. HIGH LOAD POLYSTYRENE (OR APPROVED EQUIVALENT (COMPRESSIVE STRENGTH = 40PSI).
4. DURING DELIVERY AND STORAGE, PROTECT INSULATION FROM SUNLIGHT, PHYSICAL DAMAGE, IGNITION SOURCE, AND INCOMPATIBLE CHEMICALS (SOLVENTS, PETROLEUM PRODUCTS ETC.).
5. TRENCH BACKFILL COMPACTION AND MATERIAL TO BE AS PER SPECIFICATION 02319.

THIS DRAWING MAY HAVE BEEN MODIFIED FROM ITS ORIGINAL SIZE. ALL SCALE NOTATIONS INDICATED ARE BASED ON 11"x17" FORMAT DRAWINGS

ISSUE	YY-MM-DD	REVISION
2	21-01-15	FOR CONSTRUCTION
1	20-10-15	FOR TENDER

Association of Professional Engineers & Geoscientists of Saskatchewan
CERTIFICATE OF AUTHORIZATION
MPE Engineering Ltd.
Number C1334
Permission to Consult held by:

Discipline	Sk. Reg. No.	Signature
CIVIL	22727	
ENV	22727	

PROFESSIONAL ENGINEER
M. STUSICK
MEMBER 22727
January 21 2021
YR. MN. DAY.
SASKATCHEWAN

MPE Engineering Ltd.

ENGLISH RIVER ENTERPRISES PROPERTY MANAGEMENT LP

WASTEWATER TREATMENT PLANT
CIVIL
DETAILS SHEET 2

DESIGNED	I.K.	JOB	7603-002-00
DRAWN	T.D.D.	SCALE	AS SHOWN
DATE	NOVEMBER 2020	DRAWING	C3.2

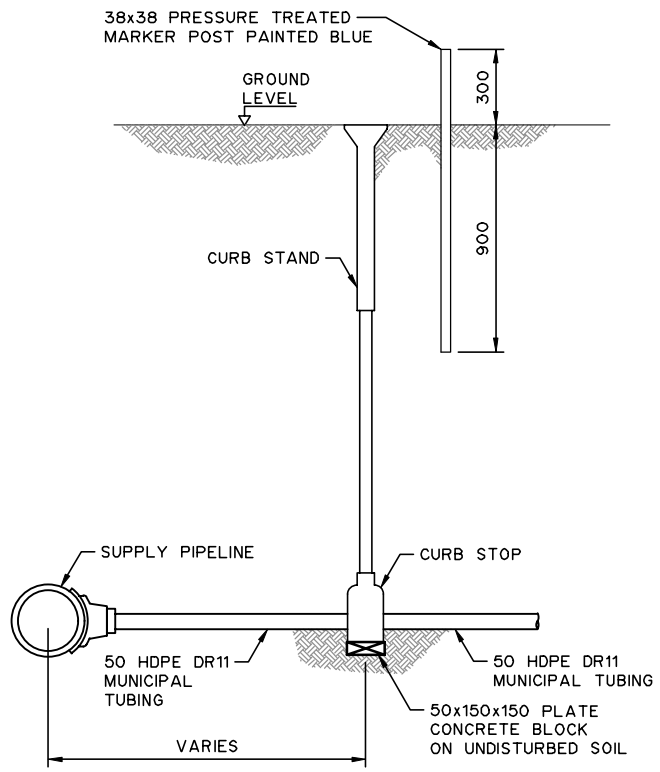

10
--

TYPICAL SERVICE CONNECTION
NTS

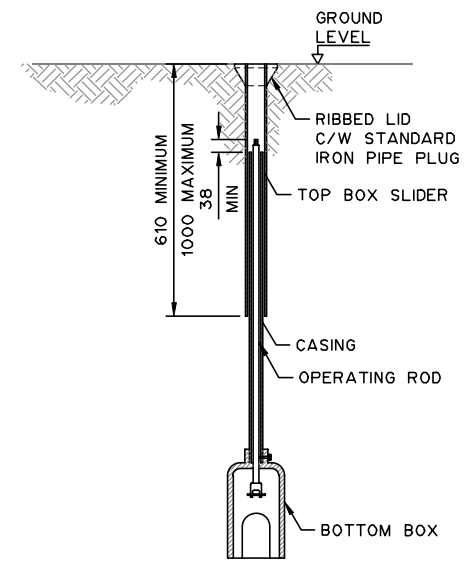

11
C1.3

CURB STAND DETAILS (SERVICE BOX)
NTS

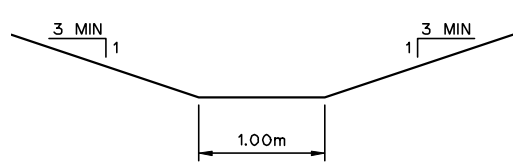

12
C1.4

DRAINAGE DITCH SECTION
NTS

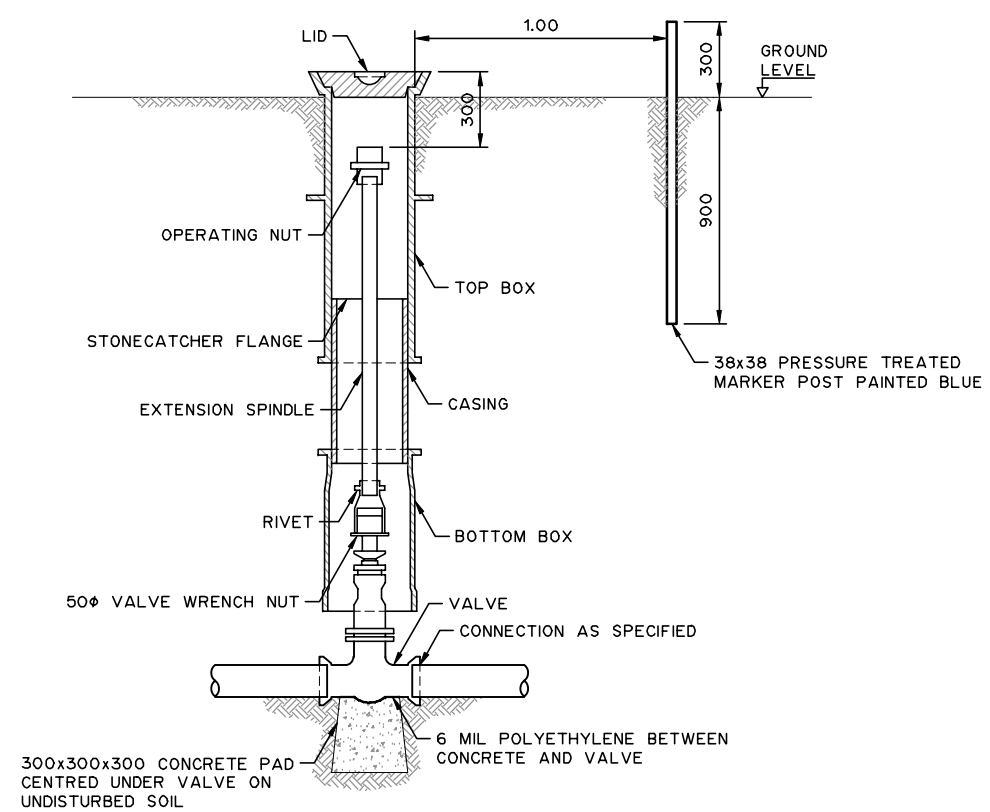

13
C1.3

BURIED GATE VALVE 100mm TO 200mm
NTS

NOTES:

1. FOR INFORMATION REGARDING GENERAL NOTES, UTILITIES, SYMBOLS, AND ABBREVIATIONS REFER TO THE LEGEND AND ABBREVIATIONS DRAWINGS.
2. ALL ELEVATIONS, STATIONS & PIPE LENGTHS ARE IN METRES AND PIPE SIZES AND DIMENSIONS ARE IN MILLIMETRES UNLESS NOTED OTHERWISE.
3. HIGH LOAD POLYSTYRENE (OR APPROVED EQUIVALENT (COMPRESSIVE STRENGTH = 40PSI).
4. DURING DELIVERY AND STORAGE, PROTECT INSULATION FROM SUNLIGHT, PHYSICAL DAMAGE, IGNITION SOURCE, AND INCOMPATIBLE CHEMICALS (SOLVENTS, PETROLEUM PRODUCTS ETC.).
5. TRENCH BACKFILL COMPACTION AND MATERIAL TO BE AS PER SPECIFICATION 02319.

THIS DRAWING MAY HAVE BEEN MODIFIED FROM ITS ORIGINAL SIZE. ALL SCALE NOTATIONS INDICATED ARE BASED ON 11"x17" FORMAT DRAWINGS

ISSUE	YY-MM-DD	REVISION
2	21-01-15	FOR CONSTRUCTION
1	20-10-15	FOR TENDER

Association of Professional Engineers & Geoscientists of Saskatchewan
CERTIFICATE OF AUTHORIZATION
MPE Engineering Ltd.
Number C1334
Permission to Consult held by:

Discipline	Sk. Reg. No.	Signature
CIVIL	22727	
ENV	22727	

PROFESSIONAL ENGINEER
M. STUSICK
MEMBER 22727
January 21 2021
YR. MN. DAY
SASKATCHEWAN

MPE Engineering Ltd.

ENGLISH RIVER ENTERPRISES
PROPERTY MANAGEMENT LP

WASTEWATER TREATMENT PLANT
CIVIL
DETAILS SHEET 3

DESIGNED	I.K.	JOB	7603-002-00
DRAWN	T.D.D.	SCALE	NTS
DATE	NOVEMBER 2020	DRAWING	C3.3

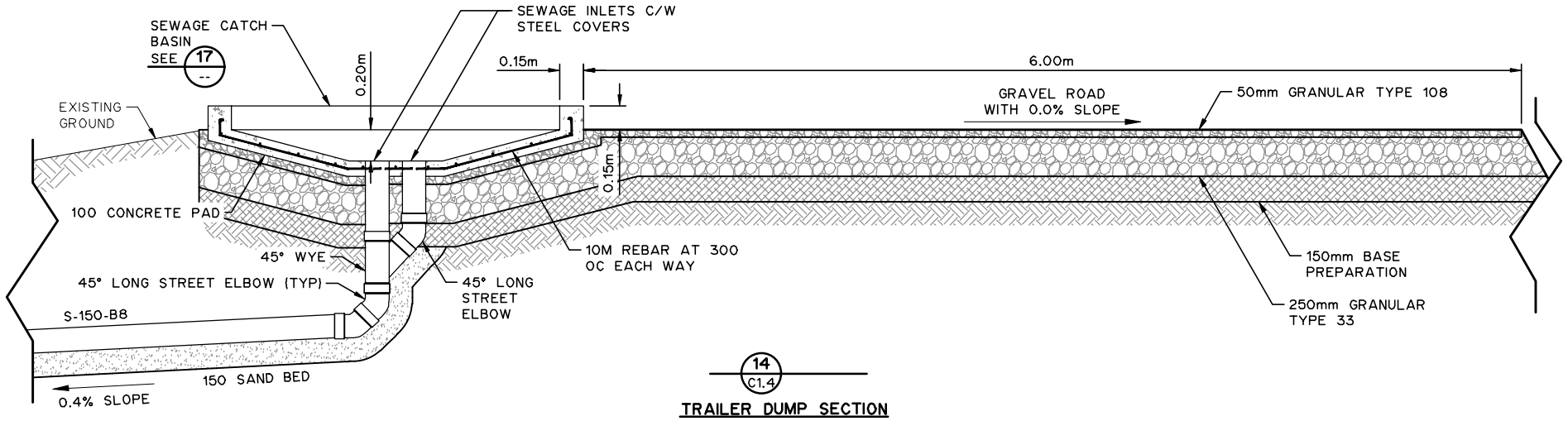

14 / C1.4

TRAILER DUMP SECTION

NTS

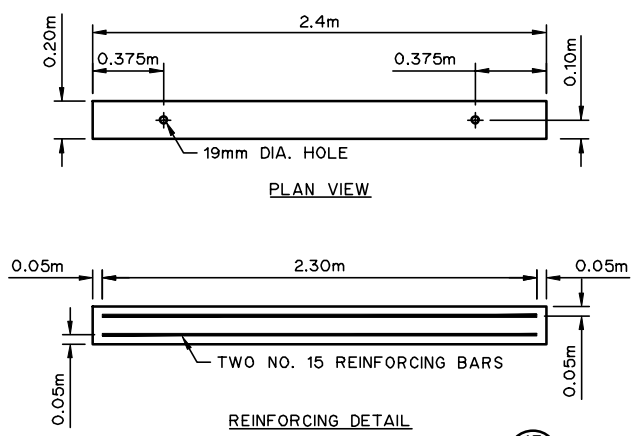

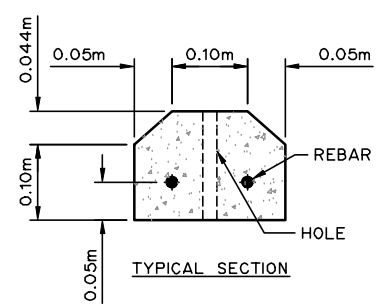

NOTE:
TWO 15.8mm x 375mm HEADLESS DRIFT PINS WITH SHARPENED POINTS TO BE SUPPLIED WITH EACH CURB SECTION.

15 / --

PRECAST CONCRETE CURB

NTS

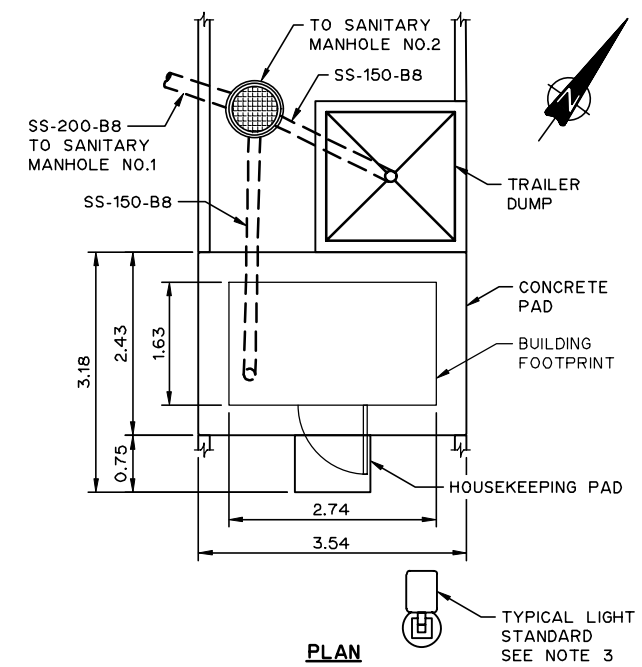

PLAN

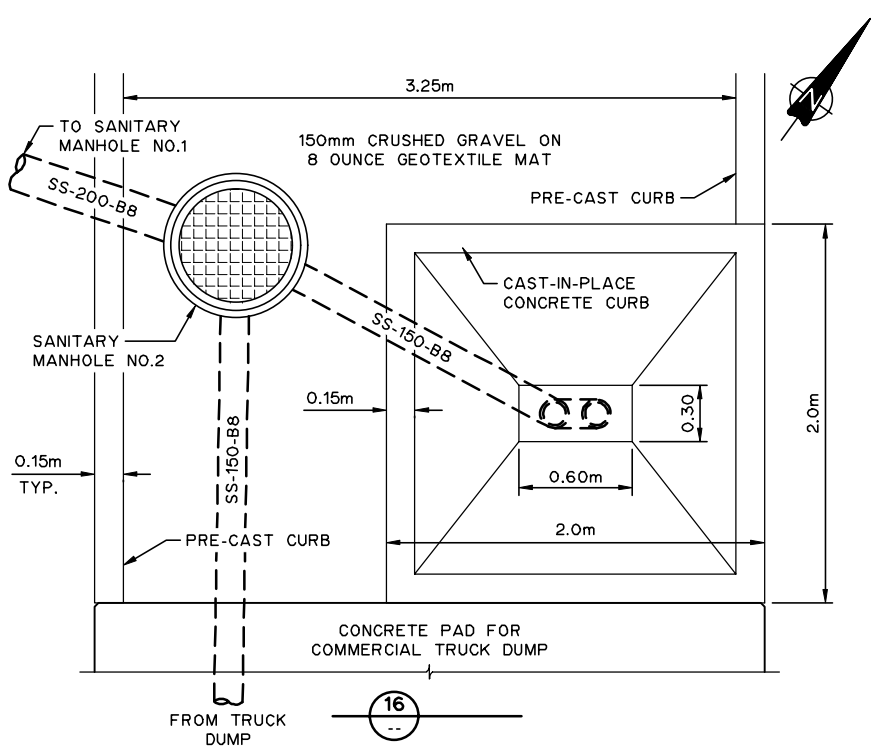

16 / --

TRAILER DUMP PLAN

NTS

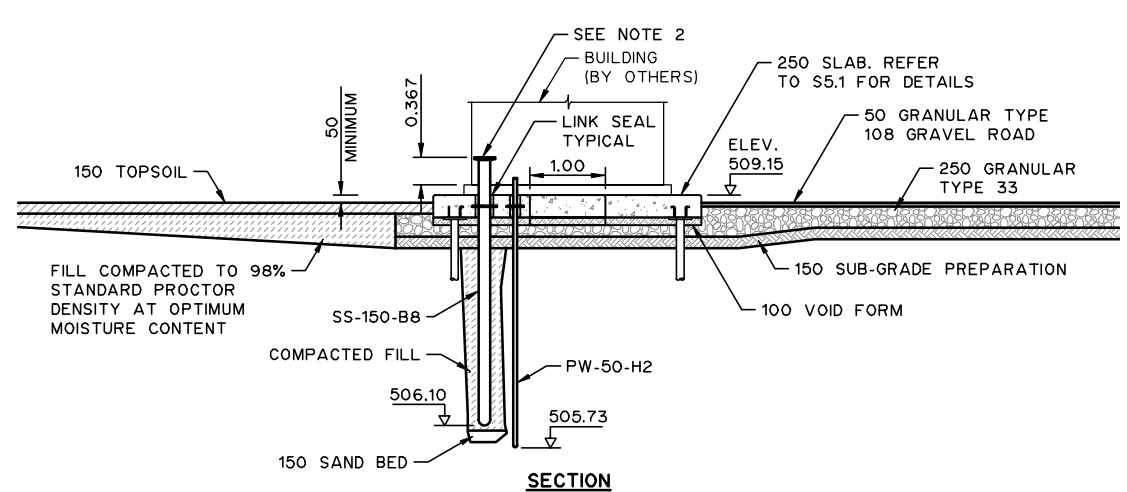

SECTION

17 / C1.4

CONCRETE PAD FOR COMMERCIAL TRUCK DUMP

1:100

NOTES:

1. FOR INFORMATION REGARDING GENERAL NOTES, UTILITIES, SYMBOLS, AND ABBREVIATIONS REFER TO THE LEGEND AND ABBREVIATIONS DRAWINGS.
2. CONTRACTOR TO COORDINATE WITH SEPTAGE STATION SUPPLIER FOR EXACT LOCATION AND CONNECT TO SEPTAGE TERMINAL PIPING.
3. CONTRACTOR TO INSTALL LIGHT STANDARD.

THIS DRAWING MAY HAVE BEEN MODIFIED FROM ITS ORIGINAL SIZE. ALL SCALE NOTATIONS INDICATED ARE BASED ON 11"x17" FORMAT DRAWINGS

ISSUE	YY-MM-DD	REVISION
2	21-01-15	FOR CONSTRUCTION
1	20-10-15	FOR TENDER

Association of Professional Engineers & Geoscientists of Saskatchewan
CERTIFICATE OF AUTHORIZATION
MPE Engineering Ltd.
Number C1334
Permission to Consult held by:

Discipline	Sk. Reg. No.	Signature
CIVIL	22727	
ENV	22727	

PROFESSIONAL ENGINEER — M. J. STRICK — MEMBER 22727 — January 21 2021 (YR. MN. DAY.) — SASKATCHEWAN

MPE Engineering Ltd.

ENGLISH RIVER ENTERPRISES PROPERTY MANAGEMENT LP

WASTEWATER TREATMENT PLANT
CIVIL
DETAILS SHEET 4

DESIGNED	I.K.	JOB	7603-002-00
DRAWN	T.D.D.	SCALE	AS SHOWN
DATE	NOVEMBER 2020	DRAWING	C3.4

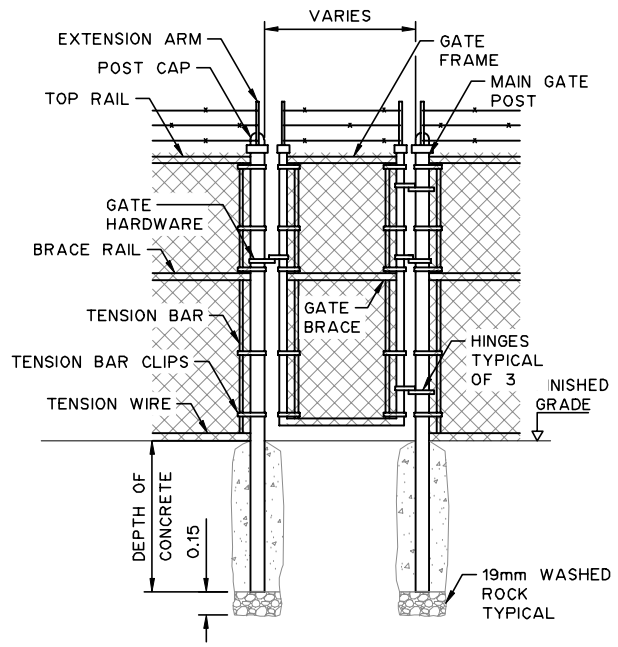

CHAIN LINK MANGATE WITH SECURITY TOP

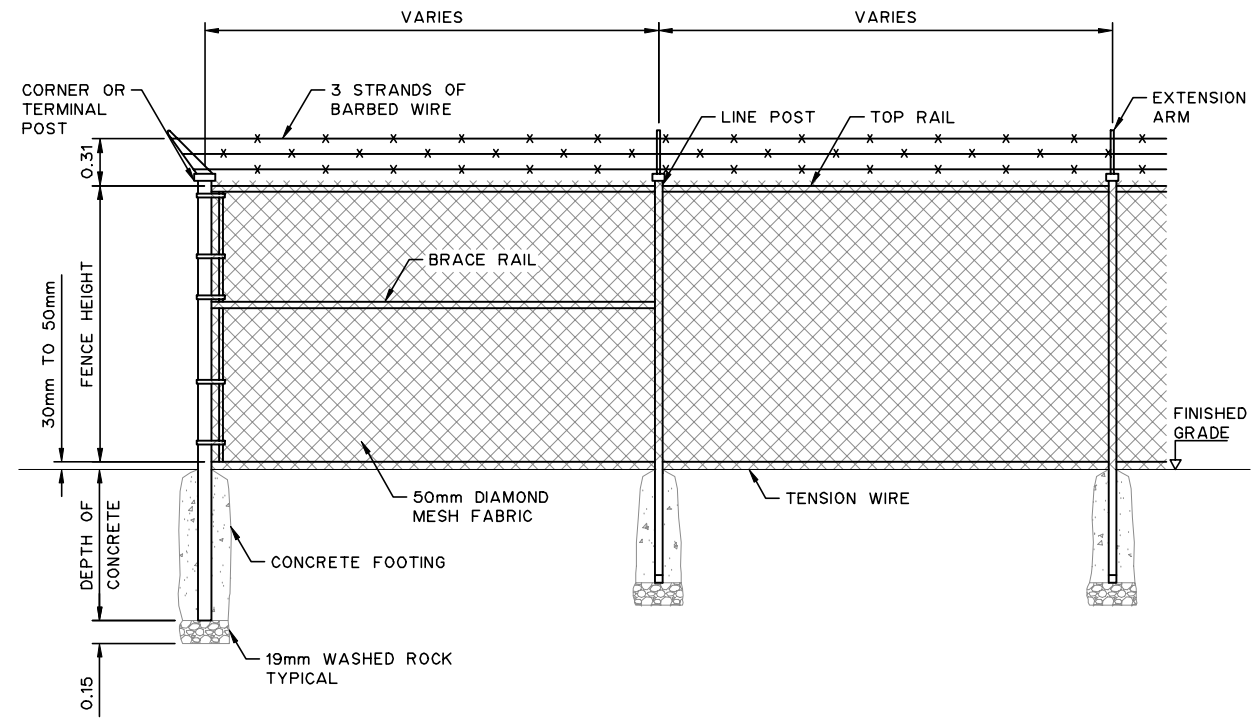

CHAIN LINK FENCE WITH SECURITY TOP

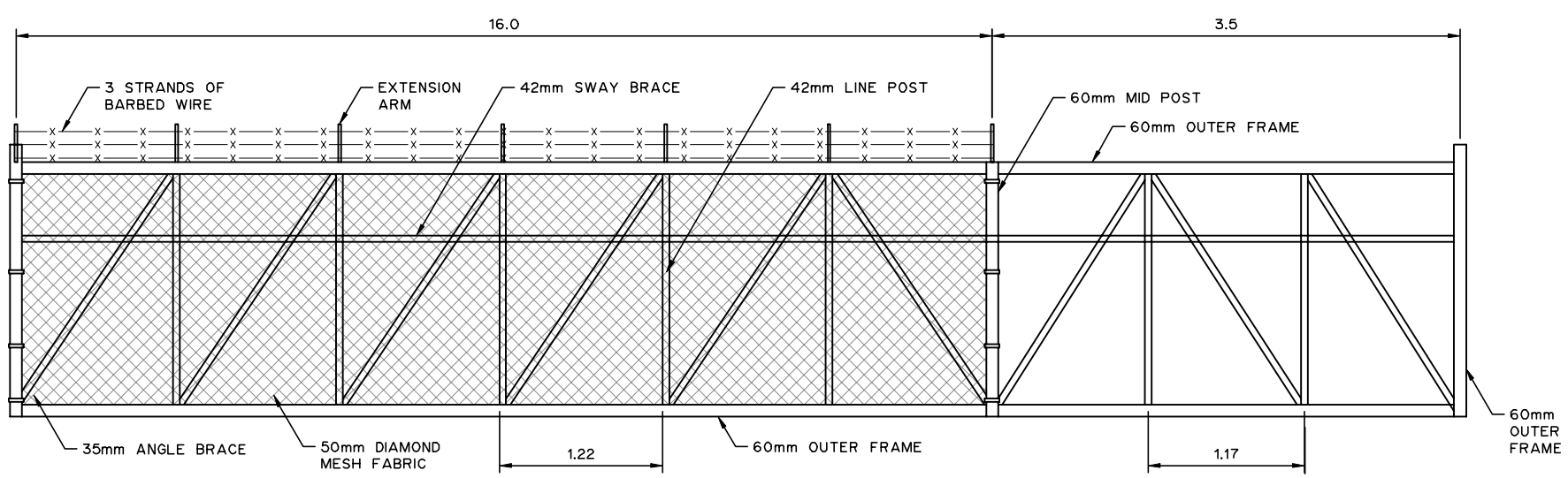

CANTILEVER GATE WITH SECURITY TOP

NOTES:

1. FOR INFORMATION REGARDING GENERAL NOTES, UTILITIES, SYMBOLS, AND ABBREVIATIONS REFER TO THE LEGEND AND ABBREVIATIONS DRAWINGS.

THIS DRAWING MAY HAVE BEEN MODIFIED FROM ITS ORIGINAL SIZE. ALL SCALE NOTATIONS INDICATED ARE BASED ON 11"x17" FORMAT DRAWINGS

ISSUE	YY-MM-DD	REVISION
2	21-01-15	FOR CONSTRUCTION
1	20-10-15	FOR TENDER

Association of Professional Engineers & Geoscientists of Saskatchewan
CERTIFICATE OF AUTHORIZATION
MPE Engineering Ltd.
Number C1334
Permission to Consult held by:

Discipline	Sk. Reg. No.	Signature
CIVIL	22727	
ENV	22727	

PROFESSIONAL ENGINEER
M. STUSICK
MEMBER 22727
January 21 2021
YR. MN. DAY
SASKATCHEWAN

MPE Engineering Ltd.

ENGLISH RIVER ENTERPRISES PROPERTY MANAGEMENT LP

WASTEWATER TREATMENT PLANT
CIVIL
DETAILS SHEET 5

DESIGNED	I.K.	JOB	7603-002-00
DRAWN	T.D.D.	SCALE	NTS
DATE	NOVEMBER 2020	DRAWING	C3.5

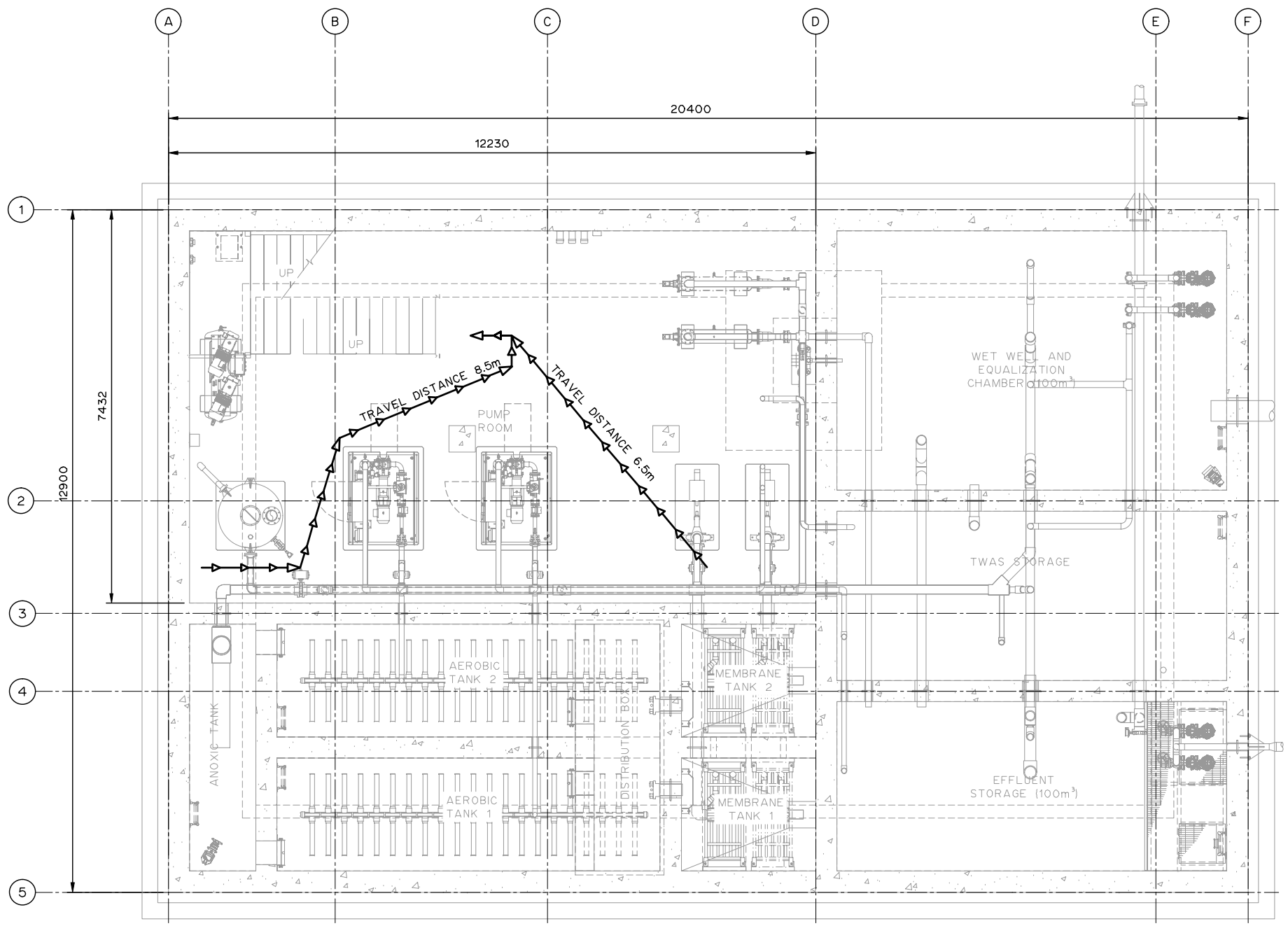

NOTES:

1. ALL DIMENSIONS ARE IN MILLIMETRES AND ELEVATIONS ARE IN METRES UNLESS NOTED OTHERWISE.

LEGEND:

1 HOUR FIRE SEPARATION

TRAVEL DISTANCE

CODE REVIEW (NATIONAL BUILDING CODE - 2015

OCCUPANCY GROUP F3: LOW HAZARD INDUSTRIAL

BUILDING AREA: 225m²

BUILDING HEIGHT: 1 STOREY

CONSTRUCTION: NON-COMBUSTIBLE/COMBUSTIBLE

SPRINKLER: NO

FACING: 1 STREET

CONFORMING TO GROUP F3: 3.2.2.85

THIS DRAWING MAY HAVE BEEN MODIFIED FROM ITS ORIGINAL SIZE. ALL SCALE NOTATIONS INDICATED ARE BASED ON 11"x17" FORMAT DRAWINGS

ISSUE	YY-MM-DD	REVISION
2	21-01-15	FOR CONSTRUCTION
1	20-10-15	FOR TENDER

Association of Professional Engineers & Geoscientists of Saskatchewan

CERTIFICATE OF AUTHORIZATION

MPE Engineering Ltd.

Number C1334

Permission to Consult held by:

Discipline	Sk. Reg. No.	Signature
STRUCTURAL	34196	

PROFESSIONAL ENGINEER
W. BONG
MEMBER 34196
2021 01 15
SASKATCHEWAN

MPE Engineering Ltd.

ENGLISH RIVER ENTERPRISES PROPERTY MANAGEMENT LP

WASTEWATER TREATMENT PLANT

ARCHITECTURAL

LOWER FLOOR

BUILDING CODE REVIEW

DESIGNED	W.W.L.S.	JOB	7603-002-00
DRAWN	D.F.F.	SCALE	1:100
DATE	NOVEMBER 2020	DRAWING	A0.1

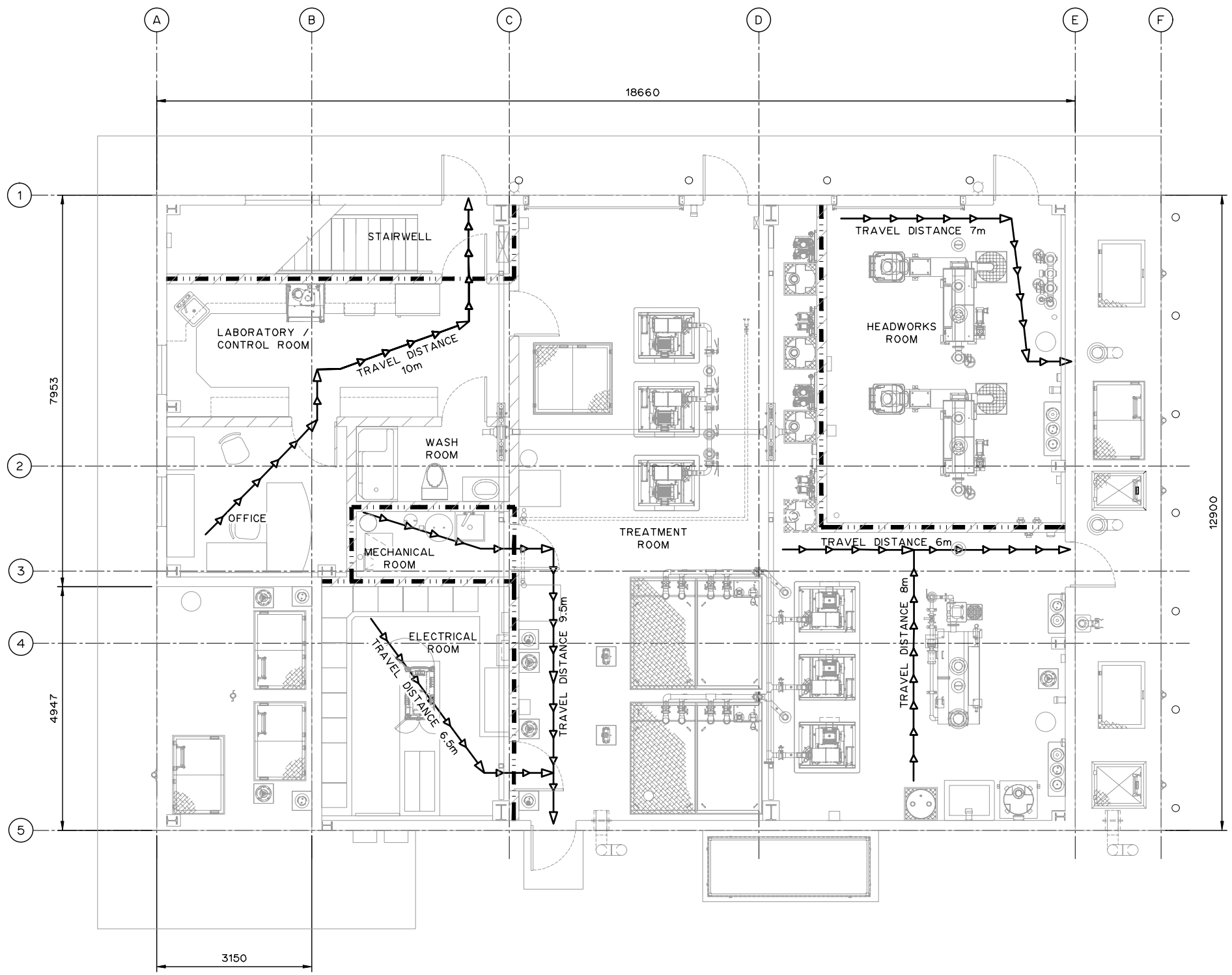

NOTES:

1. ALL DIMENSIONS ARE IN MILLIMETRES AND ELEVATIONS ARE IN METRES UNLESS NOTED OTHERWISE.

LEGEND:

1 HOUR FIRE SEPARATION

TRAVEL DISTANCE

CODE REVIEW (NATIONAL BUILDING CODE - 2015

OCCUPANCY GROUP F3: LOW HAZARD INDUSTRIAL

BUILDING AREA: 225m²

BUILDING HEIGHT: 1 STOREY

CONSTRUCTION: NON-COMBUSTIBLE/COMBUSTIBLE

SPRINKLER: NO

FACING: 1 STREET

CONFORMING TO GROUP F3: 3.2.2.85

THIS DRAWING MAY HAVE BEEN MODIFIED FROM ITS ORIGINAL SIZE. ALL SCALE NOTATIONS INDICATED ARE BASED ON 11"x17" FORMAT DRAWINGS

ISSUE	YY-MM-DD	REVISION
2	21-01-15	FOR CONSTRUCTION
1	20-10-15	FOR TENDER

Association of Professional Engineers & Geoscientists of Saskatchewan

CERTIFICATE OF AUTHORIZATION

MPE Engineering Ltd.

Number C1334

Permission to Consult held by:

Discipline	Sk. Reg. No.	Signature
STRUCTURAL	34196	

PROFESSIONAL ENGINEER
W. SONG
MEMBER 34196
2021 01 15
YR. MO. DAY
SASKATCHEWAN

MPE Engineering Ltd.

ENGLISH RIVER ENTERPRISES PROPERTY MANAGEMENT LP

WASTEWATER TREATMENT PLANT

ARCHITECTURAL

MAIN FLOOR

BUILDING CODE REVIEW

DESIGNED	W.W.L.S.	JOB	7603-002-00
DRAWN	D.F.F.	SCALE	1:100
DATE	NOVEMBER 2020	DRAWING	A0.2

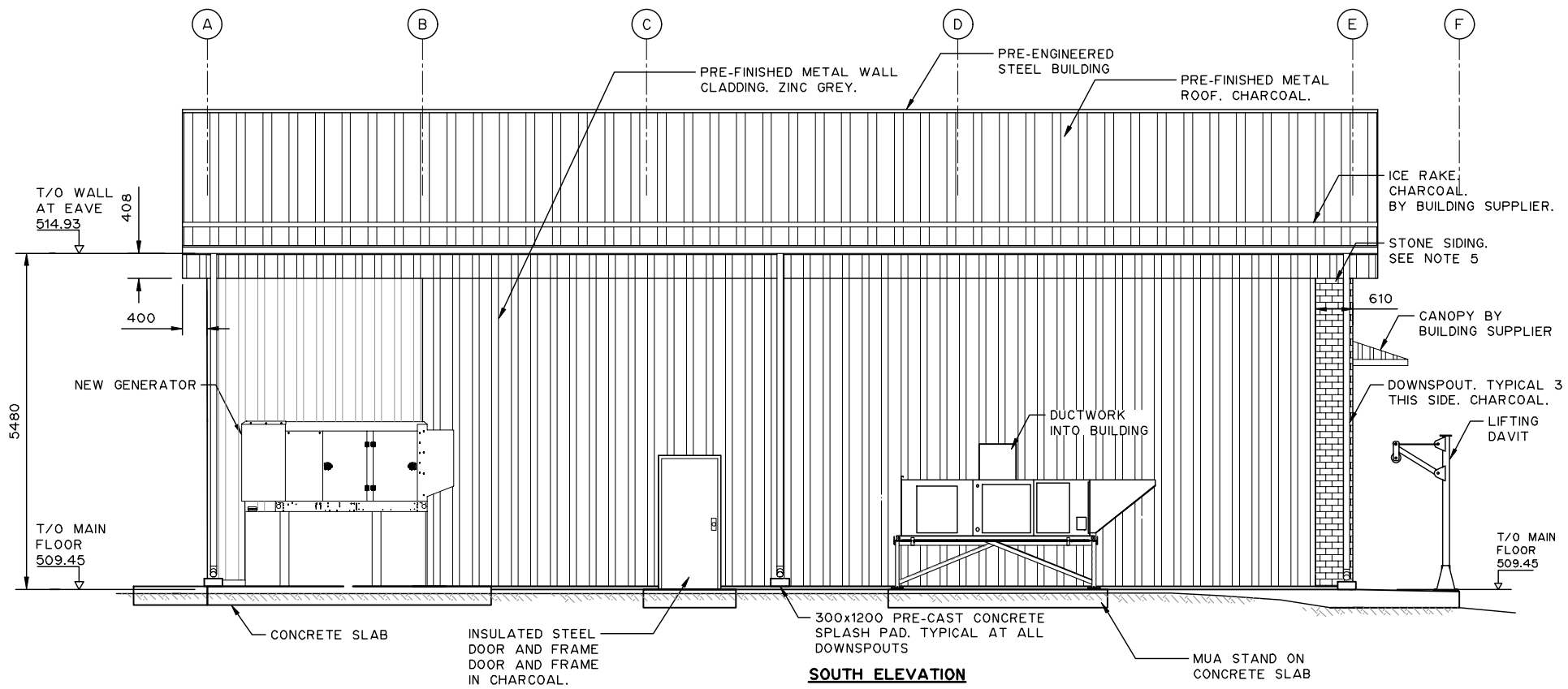

SOUTH ELEVATION

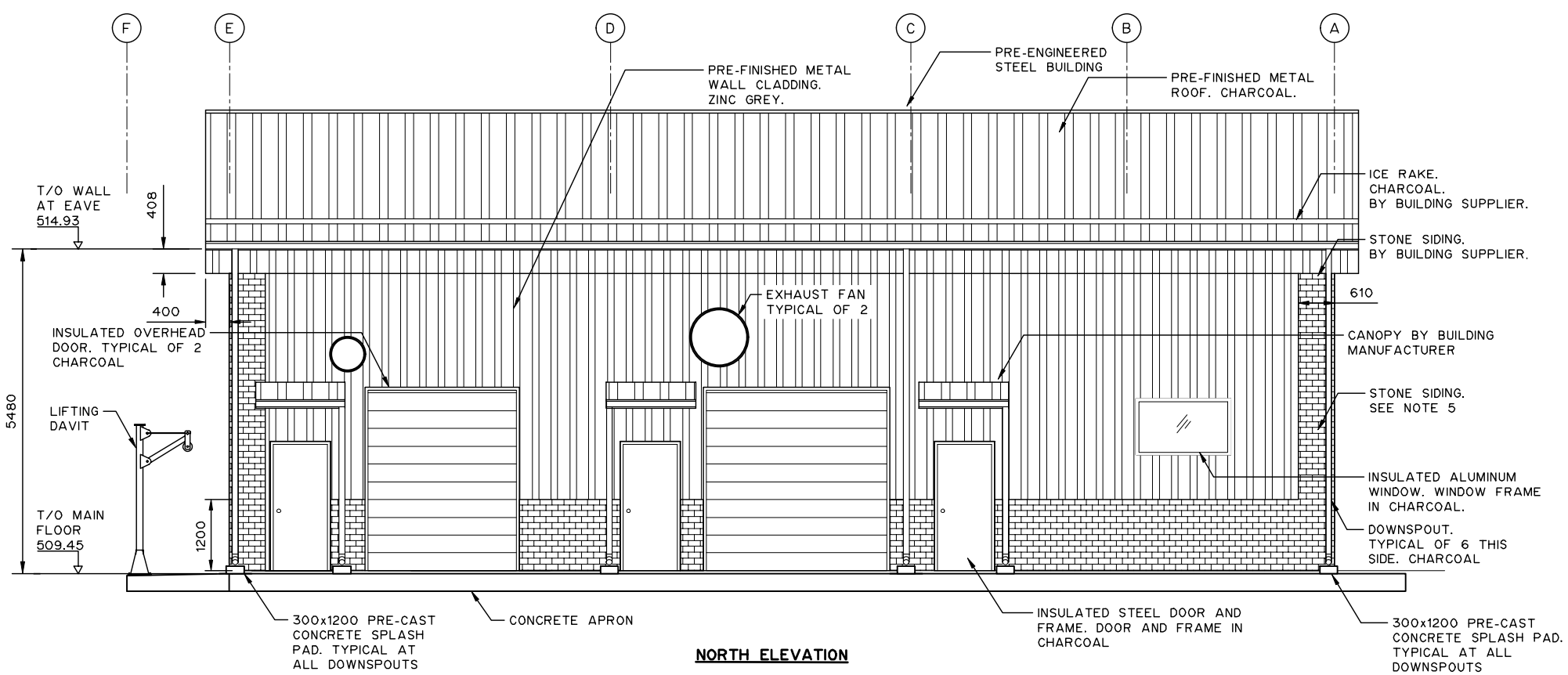

NORTH ELEVATION

NOTES:

1. ALL DIMENSIONS ARE IN MILLIMETRES AND ELEVATIONS ARE IN METRES UNLESS NOTED OTHERWISE.
2. BUILDING EXTERIOR COLOUR FINISH AS FOLLOWS: EXTERIOR WALL CLADDING: ZINC GREY ROOF, ICE RAKE, FASCIA, EAVESTROUGH, DOWNSPOUT, DOOR (MANDOOR AND OVERHEAD DOORS) AND WINDOWS: CHARCOAL ALL OTHER FINISH COLOURS NOT SPECIFIED. TO BE SELECTED BY OWNER FROM STANDARD RANGE.
3. REFER TO OTHER DISCIPLINE'S DRAWINGS FOR EXACT LOCATIONS OF MECHANICAL, ELECTRICAL AND PROCESS EQUIPMENT.
4. REFER TO CIVIL DRAWING FOR SITE GRADING DETAILS.
5. STONE SIDING TO BE BEONSTONE PANELIZED STONE SIDING BY OLDCASTLE OR ENGINEER APPROVED EQUAL. CLASSIC COLLECTION. COLOUR TO BE SELECTED BY OWNER FROM ENTIRE RANGE AVAILABLE. COMPLETE WITH ALL NECESSARY ACCESSORIES INCLUDING SILL CAP AND METAL FURRING. FOLLOW MANUFACTURER'S INSTALLATION INSTRUCTIONS. COORDINATE WITH BUILDING MANUFACTURER FOR ADDITIONAL SUPPORTS BEHIND STONE SIDING. SUBMIT SAMPLE OF SIDING FOR REVIEW PRIOR TO ORDERING.

THIS DRAWING MAY HAVE BEEN MODIFIED FROM ITS ORIGINAL SIZE. ALL SCALE NOTATIONS INDICATED ARE BASED ON 11"x17" FORMAT DRAWINGS

ISSUE	YY-MM-DD	REVISION
2	21-01-15	FOR CONSTRUCTION
1	20-10-15	FOR TENDER

Association of Professional Engineers & Geoscientists of Saskatchewan
CERTIFICATE OF AUTHORIZATION
MPE Engineering Ltd.
Number C1334
Permission to Consult held by:

Discipline	Sk. Reg. No.	Signature
STRUCTURAL	34196	

PROFESSIONAL ENGINEER W. SONG MEMBER 34196 2021 01 15 SASKATCHEWAN

MPE Engineering Ltd.

ENGLISH RIVER ENTERPRISES PROPERTY MANAGEMENT LP

WASTEWATER TREATMENT PLANT
ARCHITECTURAL
ELEVATIONS

DESIGNED	W.W.L.S.	JOB	7603-002-00
DRAWN	D.F.F.	SCALE	1:100
DATE	NOVEMBER 2020	DRAWING	A1.1

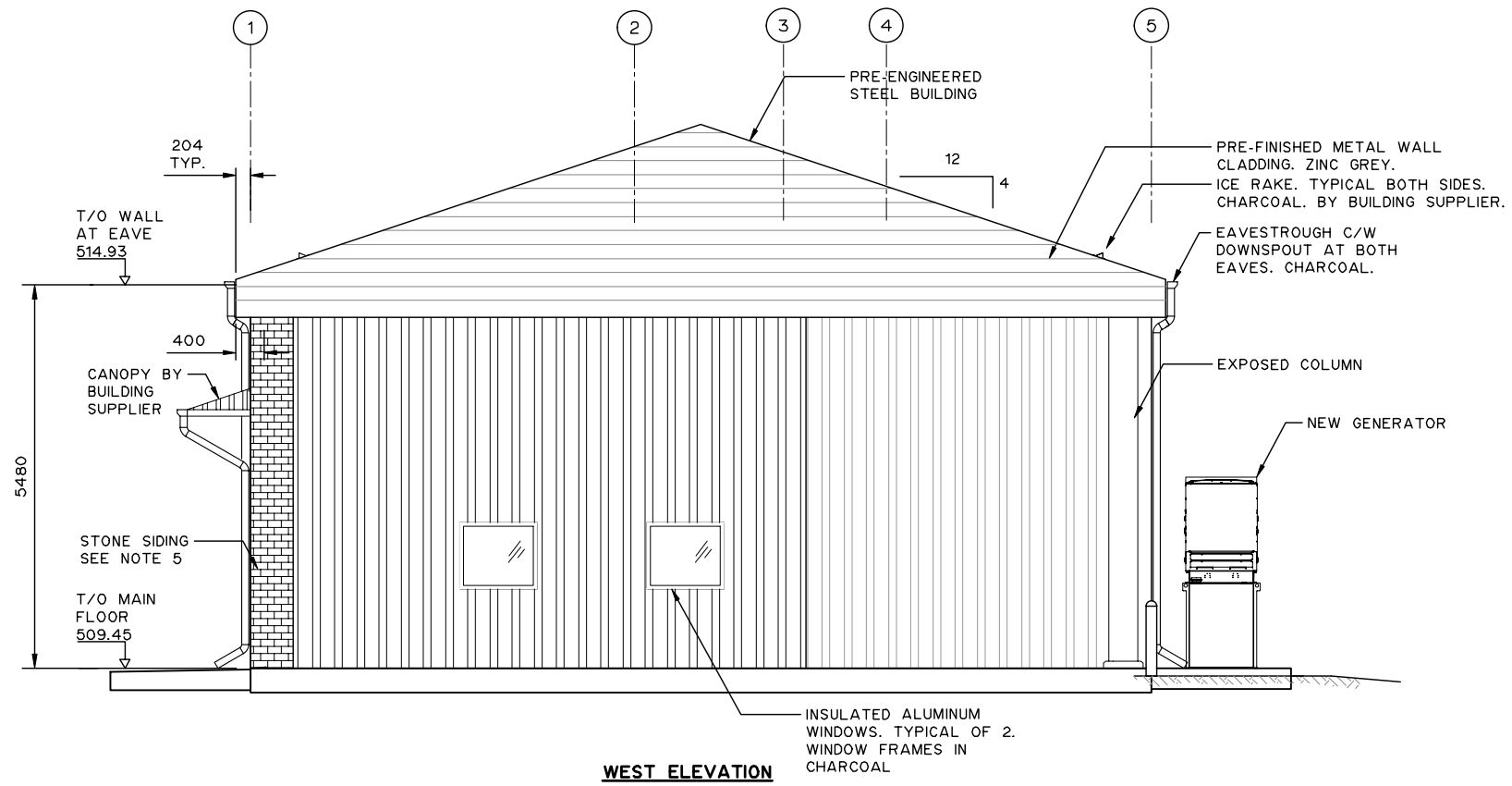

WEST ELEVATION

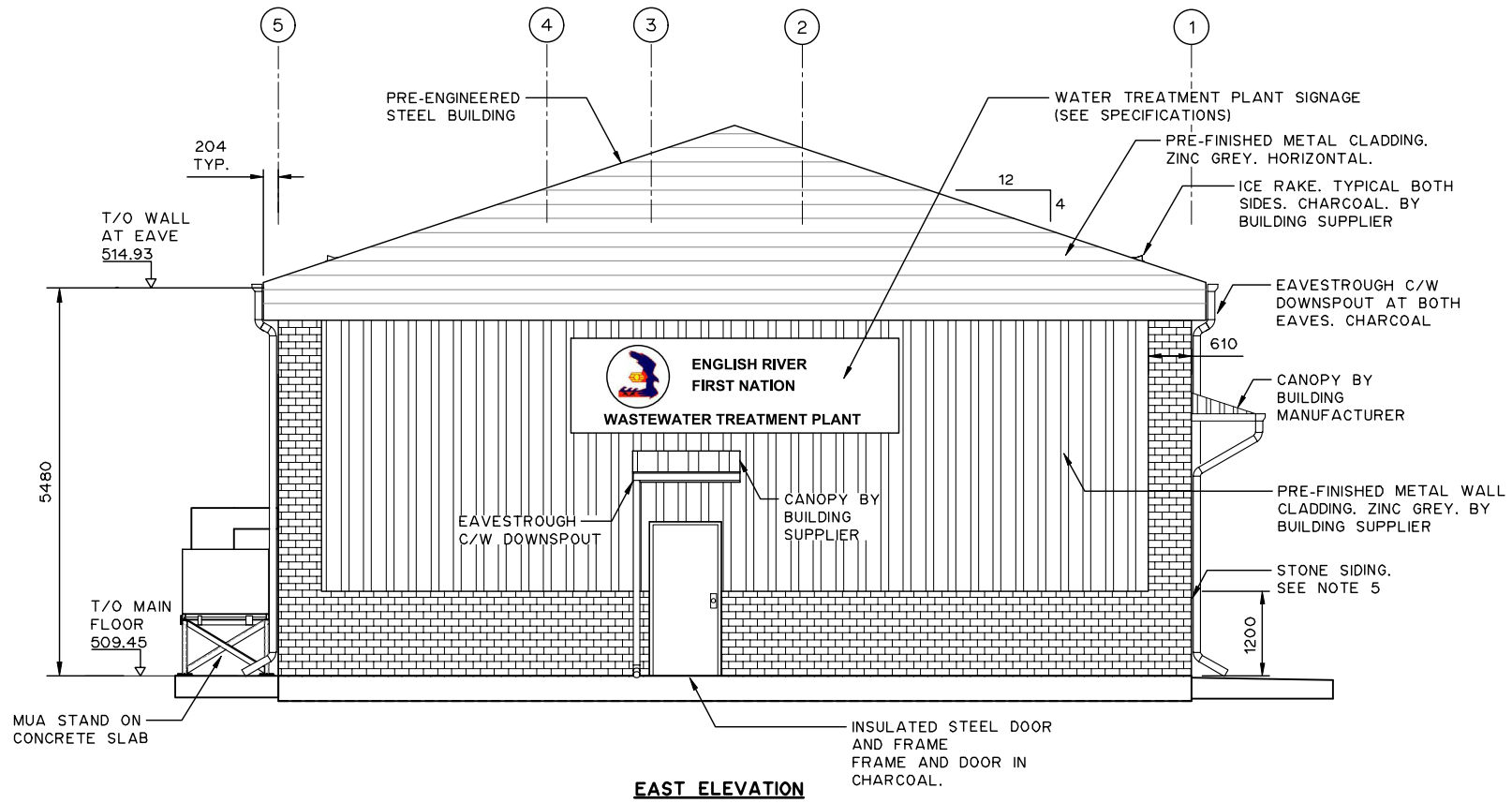

EAST ELEVATION

NOTES:

1. ALL DIMENSIONS ARE IN MILLIMETRES AND ELEVATIONS ARE IN METRES UNLESS NOTED OTHERWISE.
2. BUILDING EXTERIOR COLOUR FINISH AS FOLLOWS: EXTERIOR WALL CLADDING: ZINC GREY ROOF, ICE RAKE, FASCIA, EAVESTROUGH, DOWNSPOUT, DOOR (MANDOOR AND OVERHEAD DOORS) AND WINDOWS: CHARCOAL ALL OTHER FINISH COLOURS NOT SPECIFIED. TO BE SELECTED BY OWNER FROM STANDARD RANGE.
3. REFER TO OTHER DISCIPLINE'S DRAWINGS FOR EXACT LOCATIONS OF MECHANICAL, ELECTRICAL AND PROCESS EQUIPMENT.
4. REFER TO CIVIL DRAWING FOR SITE GRADING DETAILS.
5. STONE SIDING TO BE BEONSTONE PANELIZED STONE SIDING BY OLDCASTLE OR ENGINEER APPROVED EQUAL. CLASSIC COLLECTION. COLOUR TO BE SELECTED BY OWNER FROM ENTIRE RANGE AVAILABLE. COMPLETE WITH ALL NECESSARY ACCESSORIES INCLUDING SILL CAP AND METAL FURRING. FOLLOW MANUFACTURER'S INSTALLATION INSTRUCTIONS. COORDINATE WITH BUILDING MANUFACTURER FOR ADDITIONAL SUPPORTS BEHIND STONE SIDING. SUBMIT SAMPLE OF SIDING FOR REVIEW PRIOR TO ORDERING.

THIS DRAWING MAY HAVE BEEN MODIFIED FROM ITS ORIGINAL SIZE. ALL SCALE NOTATIONS INDICATED ARE BASED ON 11"x17" FORMAT DRAWINGS

ISSUE	YY-MM-DD	REVISION
2	21-01-15	FOR CONSTRUCTION
1	20-10-15	FOR TENDER

Association of Professional Engineers & Geoscientists of Saskatchewan
CERTIFICATE OF AUTHORIZATION
MPE Engineering Ltd.
Number C1334
Permission to Consult held by:

Discipline	Sk. Reg. No.	Signature
STRUCTURAL	34196	

PROFESSIONAL ENGINEER W. SONG MEMBER 34196 2021 01 15 SASKATCHEWAN

MPE Engineering Ltd.

ENGLISH RIVER ENTERPRISES PROPERTY MANAGEMENT LP

WASTEWATER TREATMENT PLANT
ARCHITECTURAL
ELEVATIONS

DESIGNED	W.W.L.S.	JOB	7603-002-00
DRAWN	D.F.F.	SCALE	1:100
DATE	NOVEMBER 2020	DRAWING	A1.2

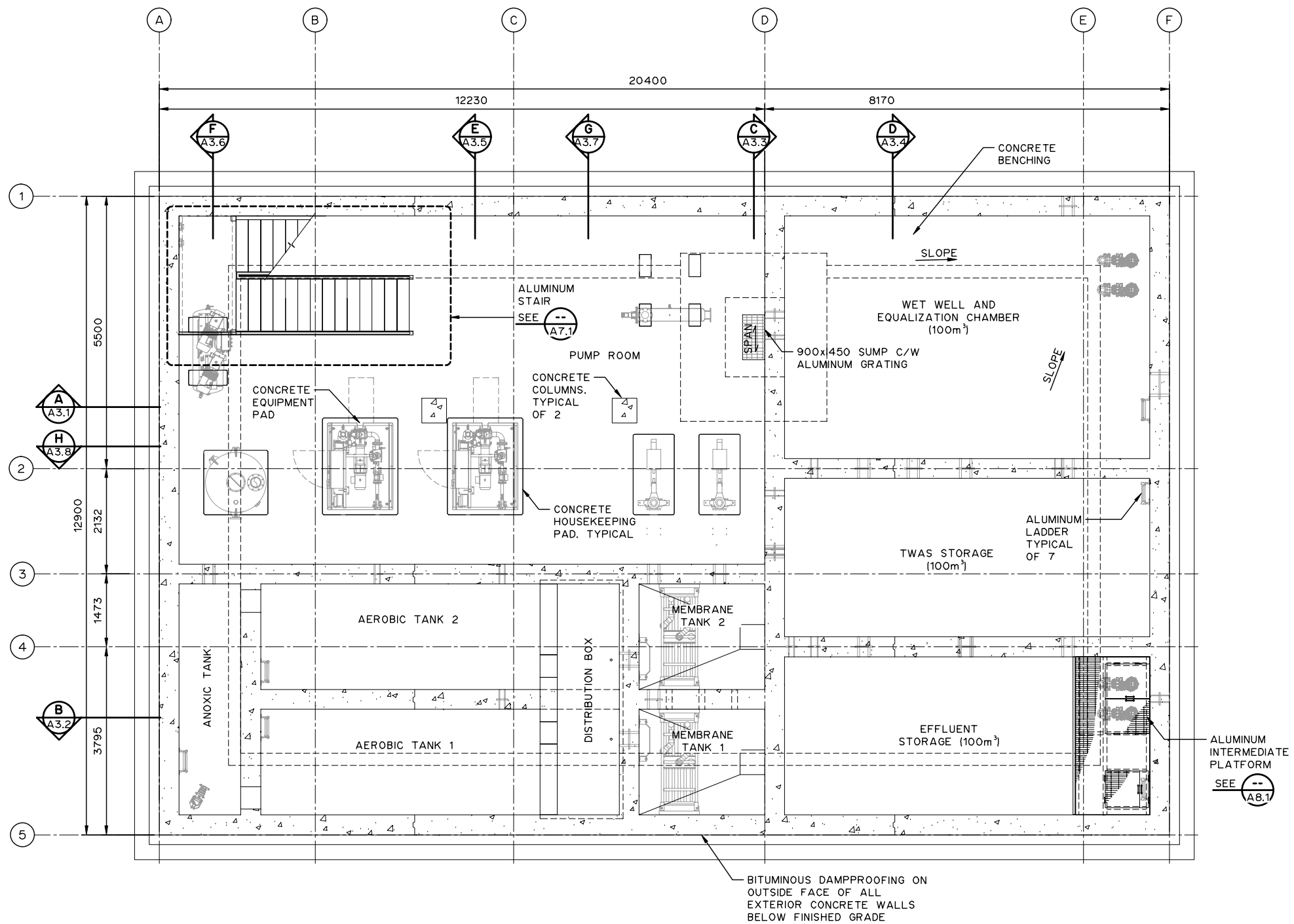

NOTES:

1. ALL DIMENSIONS ARE IN MILLIMETRES AND ELEVATIONS ARE IN METRES UNLESS NOTED OTHERWISE.
2. SEE STRUCTURAL DRAWINGS FOR SIZE AND REINFORCEMENT OF CONCRETE COMPONENTS.
3. SEE DRAWING A4.1 FOR ROOM FINISH SCHEDULE.
4. ALL ALUMINUM LADDERS TO MEET P.I.P.
5. SEE OTHER DISCIPLINES FOR LOCATIONS AND SIZES OF PENETRATIONS.
6. SLOPE FLOOR TO DRAINS.
7. BOTTOM OF EXCAVATION IS TO BE REVIEWED BY GEOTECHNICAL ENGINEER PRIOR TO MUD SLAB. MUD SLAB MUST BE PLACED IMMEDIATELY FOLLOWING GEOTECHNICAL ENGINEER'S APPROVAL.

THIS DRAWING MAY HAVE BEEN MODIFIED FROM ITS ORIGINAL SIZE. ALL SCALE NOTATIONS INDICATED ARE BASED ON 11"x17" FORMAT DRAWINGS

ISSUE	YY-MM-DD	REVISION
2	21-01-15	FOR CONSTRUCTION
1	20-10-15	FOR TENDER

Association of Professional Engineers & Geoscientists of Saskatchewan
CERTIFICATE OF AUTHORIZATION
MPE Engineering Ltd.
Number C1334
Permission to Consult held by:

Discipline	Sk. Reg. No.	Signature
STRUCTURAL	34196	

PROFESSIONAL ENGINEER
W. BONG
MEMBER 34196
2021 01 15
YR. MO. DAY
SASKATCHEWAN

MPE Engineering Ltd.

ENGLISH RIVER ENTERPRISES PROPERTY MANAGEMENT LP

WASTEWATER TREATMENT PLANT
ARCHITECTURAL
LOWER FLOOR PLAN

DESIGNED	W.W.L.S.	JOB	7603-002-00
DRAWN	D.F.F.	SCALE	1:100
DATE	NOVEMBER 2020	DRAWING	A2.1

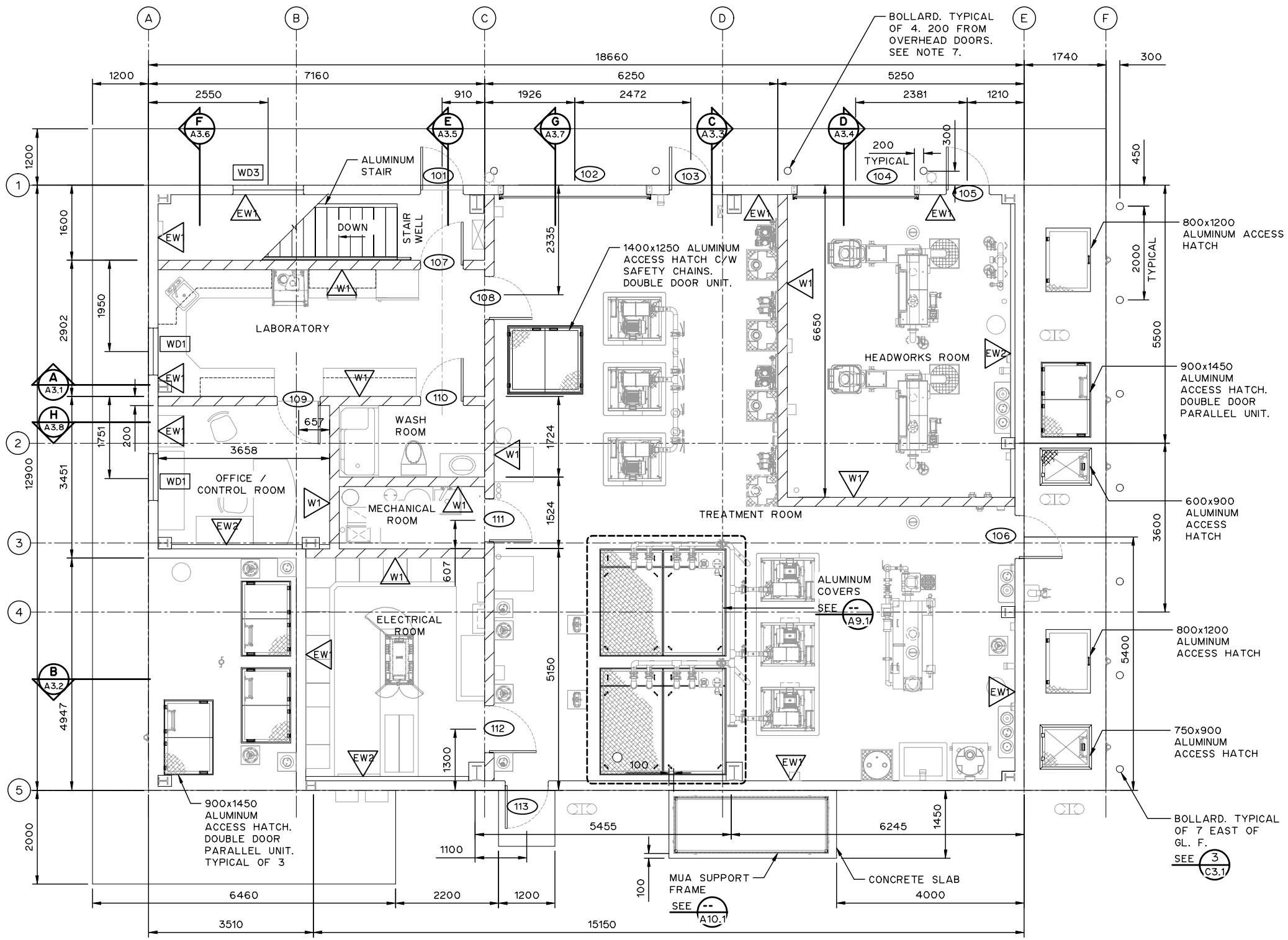

NOTES:

1. ALL DIMENSIONS ARE IN MILLIMETRES AND ELEVATIONS ARE IN METRES UNLESS NOTED OTHERWISE.
2. SEE STRUCTURAL DRAWINGS FOR LOCATION AND SIZE OF CONCRETE EQUIPMENT PADS.
3. SEE DRAWING A4.1 FOR DOOR, AND WINDOW SCHEDULES.
4. SEE DRAWING A4.1 FOR ROOM FINISH SCHEDULE.
5. SEE STRUCTURAL DRAWINGS FOR DETAILS FOR ALL CONCRETE HOUSEKEEPING PADS AND CONCRETE EQUIPMENT PADS.
6. COORDINATE WITH OTHER DISCIPLINES FOR LOCATION AND SIZE OF WALL AND FLOOR PENETRATIONS.
7. PROVIDE POUR IN PLACE SAFETY BOLLARDS BY ULINE CANADA MODEL NO. H-7685 OR EQUAL. FILL WITH CONCRETE.

THIS DRAWING MAY HAVE BEEN MODIFIED FROM ITS ORIGINAL SIZE. ALL SCALE NOTATIONS INDICATED ARE BASED ON 11"x17" FORMAT DRAWINGS

ISSUE	YY-MM-DD	REVISION
2	21-01-15	FOR CONSTRUCTION
1	20-10-15	FOR TENDER

Association of Professional Engineers & Geoscientists of Saskatchewan
CERTIFICATE OF AUTHORIZATION
MPE Engineering Ltd.
Number C1334
Permission to Consult held by:

Discipline	Sk. Reg. No.	Signature
STRUCTURAL	34196	

PROFESSIONAL ENGINEER W. SONG MEMBER 34196 2021 01 15 SASKATCHEWAN

MPE Engineering Ltd.

ENGLISH RIVER ENTERPRISES PROPERTY MANAGEMENT LP

WASTEWATER TREATMENT PLANT
ARCHITECTURAL
MAIN FLOOR PLAN

DESIGNED	W.W.L.S.	JOB	7603-002-00
DRAWN	D.F.F.	SCALE	1:100
DATE	NOVEMBER 2020	DRAWING	A2.2

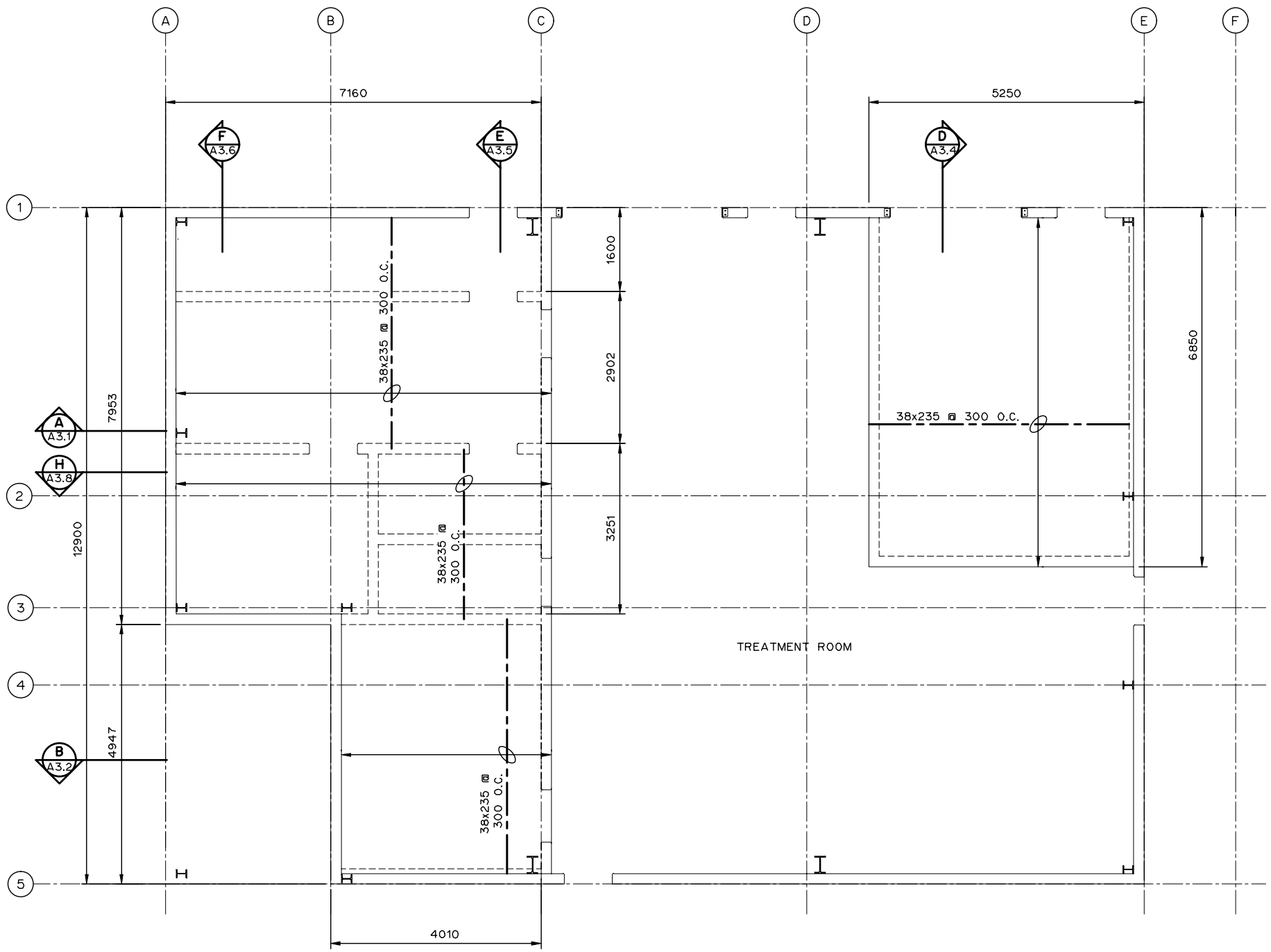

NOTES:

1. ALL DIMENSIONS ARE IN MILLIMETRES AND ELEVATIONS ARE IN METRES UNLESS NOTED OTHERWISE.

MEZZANINE DESIGN NOTES:

DEAD LOAD: STRUCTURE SELF-WEIGHT

LIVE LOAD: 1 kPa

* MEZZANINE NOT FOR STORAGE

THIS DRAWING MAY HAVE BEEN MODIFIED FROM ITS ORIGINAL SIZE. ALL SCALE NOTATIONS INDICATED ARE BASED ON 11"x17" FORMAT DRAWINGS

ISSUE	YY-MM-DD	REVISION
2	21-01-15	FOR CONSTRUCTION
1	20-10-15	FOR TENDER

Association of Professional Engineers & Geoscientists of Saskatchewan
CERTIFICATE OF AUTHORIZATION
MPE Engineering Ltd.
Number C1334
Permission to Consult held by:

Discipline	Sk. Reg. No.	Signature
STRUCTURAL	34196	

PROFESSIONAL ENGINEER
W. SONG
MEMBER 34196
2021 01 15
SASKATCHEWAN

MPE Engineering Ltd.

ENGLISH RIVER ENTERPRISES
PROPERTY MANAGEMENT LP

WASTEWATER TREATMENT PLANT

ARCHITECTURAL

CEILING FRAMING PLAN

DESIGNED	W.W.L.S.	JOB	7603-002-00
DRAWN	D.F.F.	SCALE	1:100
DATE	NOVEMBER 2020	DRAWING	A2.3

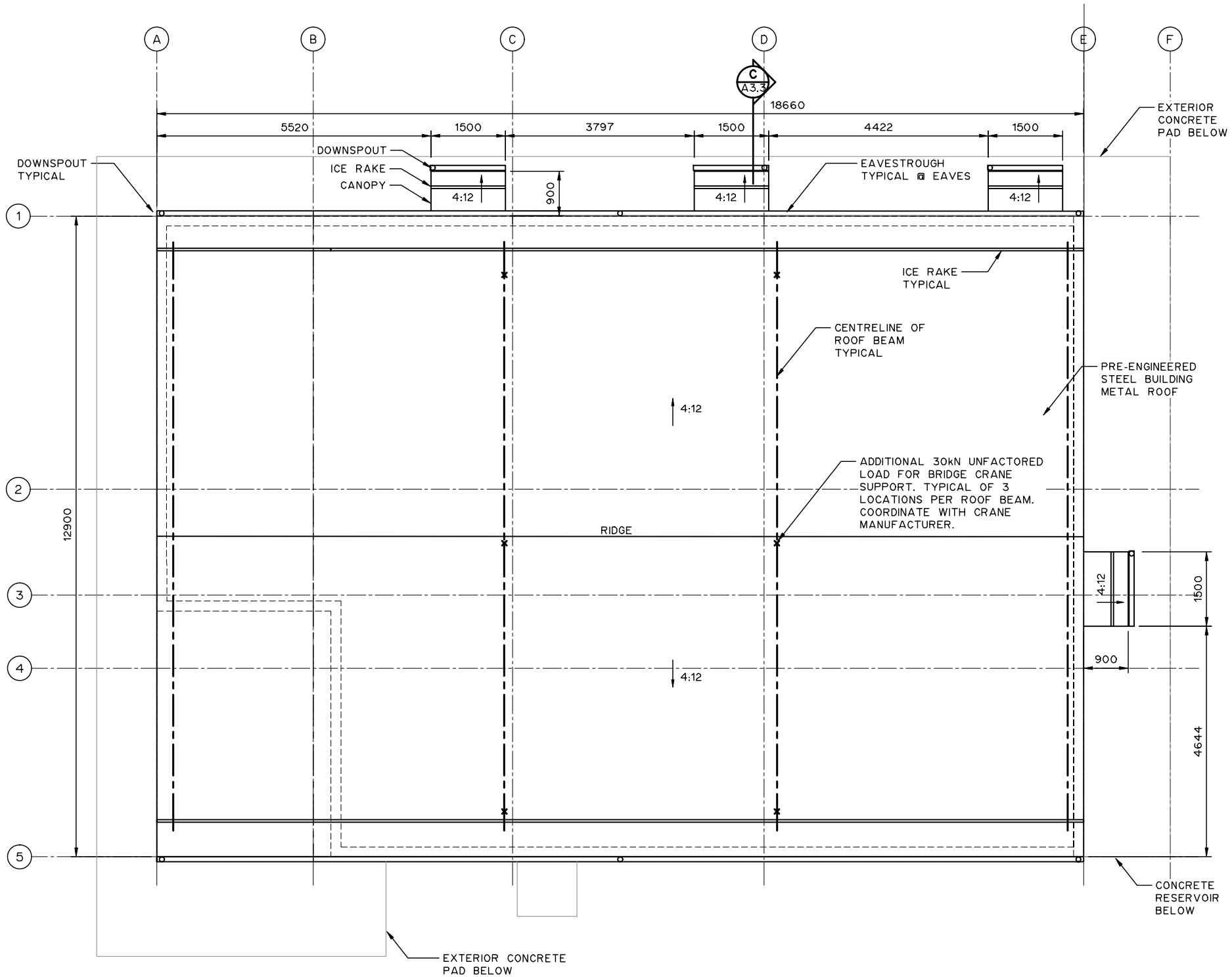

NOTES:

1. ALL DIMENSIONS ARE IN MILLIMETRES AND ELEVATIONS ARE IN METRES UNLESS NOTED OTHERWISE.
2. BUILDING TO BE CONSTRUCTED ACCORDING TO THE LATEST EDITION OF THE NATIONAL BUILDING CODE. BUILDING DESIGNED AS POST DISASTER FOR SASKATOON, SASKATCHEWAN.

THIS DRAWING MAY HAVE BEEN MODIFIED FROM ITS ORIGINAL SIZE. ALL SCALE NOTATIONS INDICATED ARE BASED ON 11"x17" FORMAT DRAWINGS

ISSUE	YY-MM-DD	REVISION
2	21-01-15	FOR CONSTRUCTION
1	20-10-15	FOR TENDER

Association of Professional Engineers & Geoscientists of Saskatchewan
CERTIFICATE OF AUTHORIZATION
MPE Engineering Ltd.
Number C1334
Permission to Consult held by:

Discipline	Sk. Reg. No.	Signature
STRUCTURAL	34196	

PROFESSIONAL ENGINEER W. SONG MEMBER 34196 2021 01 15 SASKATCHEWAN

MPE Engineering Ltd.

ENGLISH RIVER ENTERPRISES PROPERTY MANAGEMENT LP

WASTEWATER TREATMENT PLANT

ARCHITECTURAL

ROOF PLAN

DESIGNED	W.W.L.S.	JOB	7603-002-00
DRAWN	D.F.F.	SCALE	1:100
DATE	NOVEMBER 2020	DRAWING	A2.4

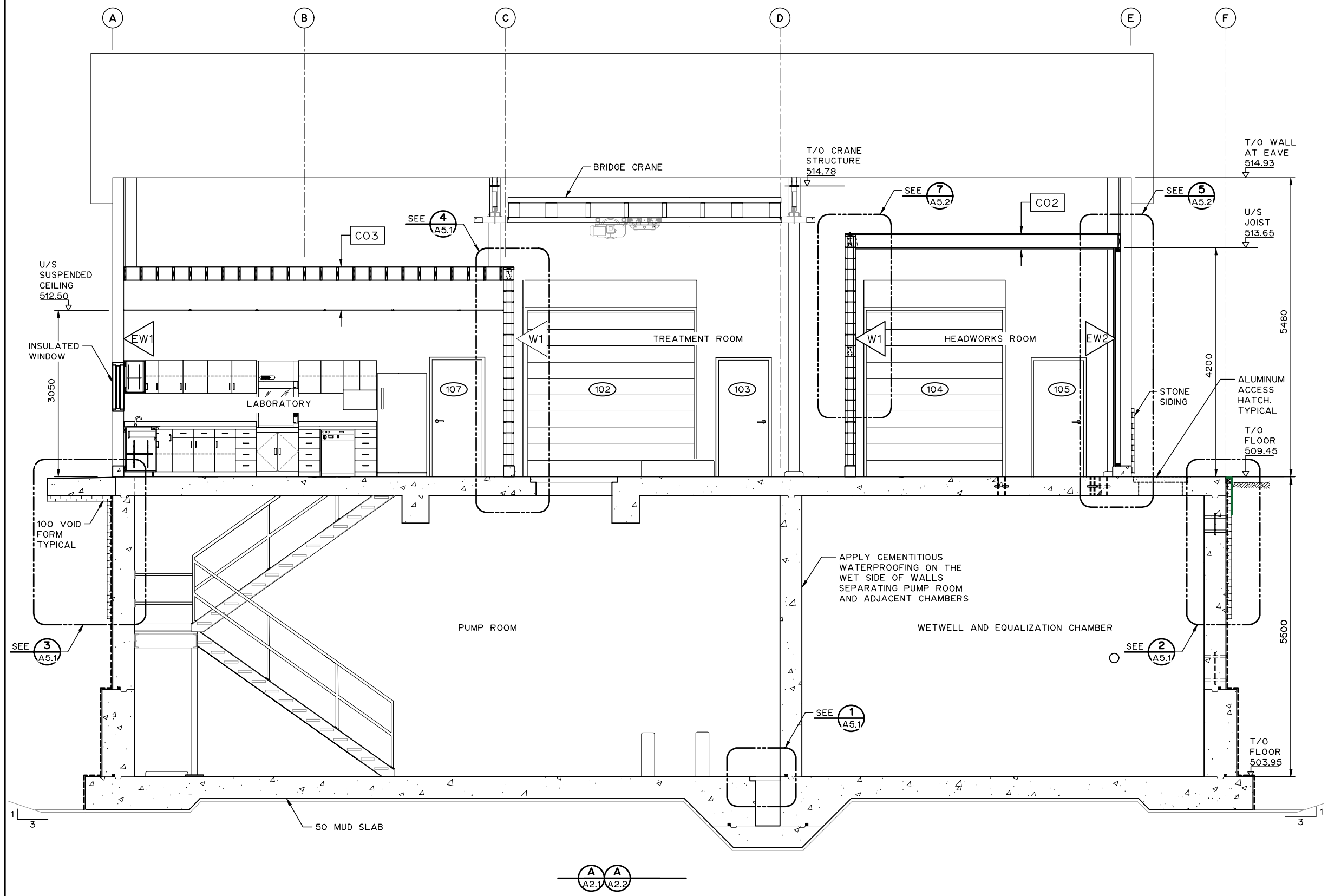

NOTES:

1. ALL DIMENSIONS ARE IN MILLIMETRES AND ELEVATIONS ARE IN METRES UNLESS NOTED OTHERWISE.
2. SEE STRUCTURAL DRAWINGS FOR LOCATION AND SIZE OF CONCRETE EQUIPMENT PADS.
3. SEE DRAWING A4.1 FOR DOOR, AND WINDOW SCHEDULES.
4. SEE DRAWING A4.1 FOR ROOM FINISH SCHEDULE.
5. TOP OF FLOOR ELEVATIONS SHOWN INDICATE MAXIMUM FLOOR ELEVATION WITH THE ROOM.
6. MUD SLAB TO EXTEND FULL WIDTH OF EXCAVATION.
7. ALL LADDERS TO P.I.P. REQUIREMENTS.
8. SEE STRUCTURAL FOR ALL CONCRETE DETAILS.
9. BOTTOM OF EXCAVATION IS TO BE REVIEWED BY GEOTECHNICAL ENGINEER PRIOR TO MUD SLAB. MUD SLAB MUST BE PLACED IMMEDIATELY FOLLOWING GEOTECHNICAL ENGINEER'S APPROVAL.
10. SEE DRAWING A11.1 FOR BRIDGE CRANE SUPPORT DETAILS.

THIS DRAWING MAY HAVE BEEN MODIFIED FROM ITS ORIGINAL SIZE. ALL SCALE NOTATIONS INDICATED ARE BASED ON 11"x17" FORMAT DRAWINGS

ISSUE	YY-MM-DD	REVISION
2	21-01-15	FOR CONSTRUCTION
1	20-10-15	FOR TENDER

Association of Professional Engineers & Geoscientists of Saskatchewan
CERTIFICATE OF AUTHORIZATION
MPE Engineering Ltd.
Number C1334
Permission to Consult held by:

Discipline	Sk. Reg. No.	Signature
STRUCTURAL	34196	

PROFESSIONAL ENGINEER W. SONG MEMBER 34196 2021 01 15 SASKATCHEWAN

MPE Engineering Ltd.

ENGLISH RIVER ENTERPRISES PROPERTY MANAGEMENT LP

WASTEWATER TREATMENT PLANT
ARCHITECTURAL
SECTIONS

DESIGNED	I.K., W.W.L.S.	JOB	7603-002-00
DRAWN	D.F.F.	SCALE	1:75
DATE	NOVEMBER 2020	DRAWING	A3.1

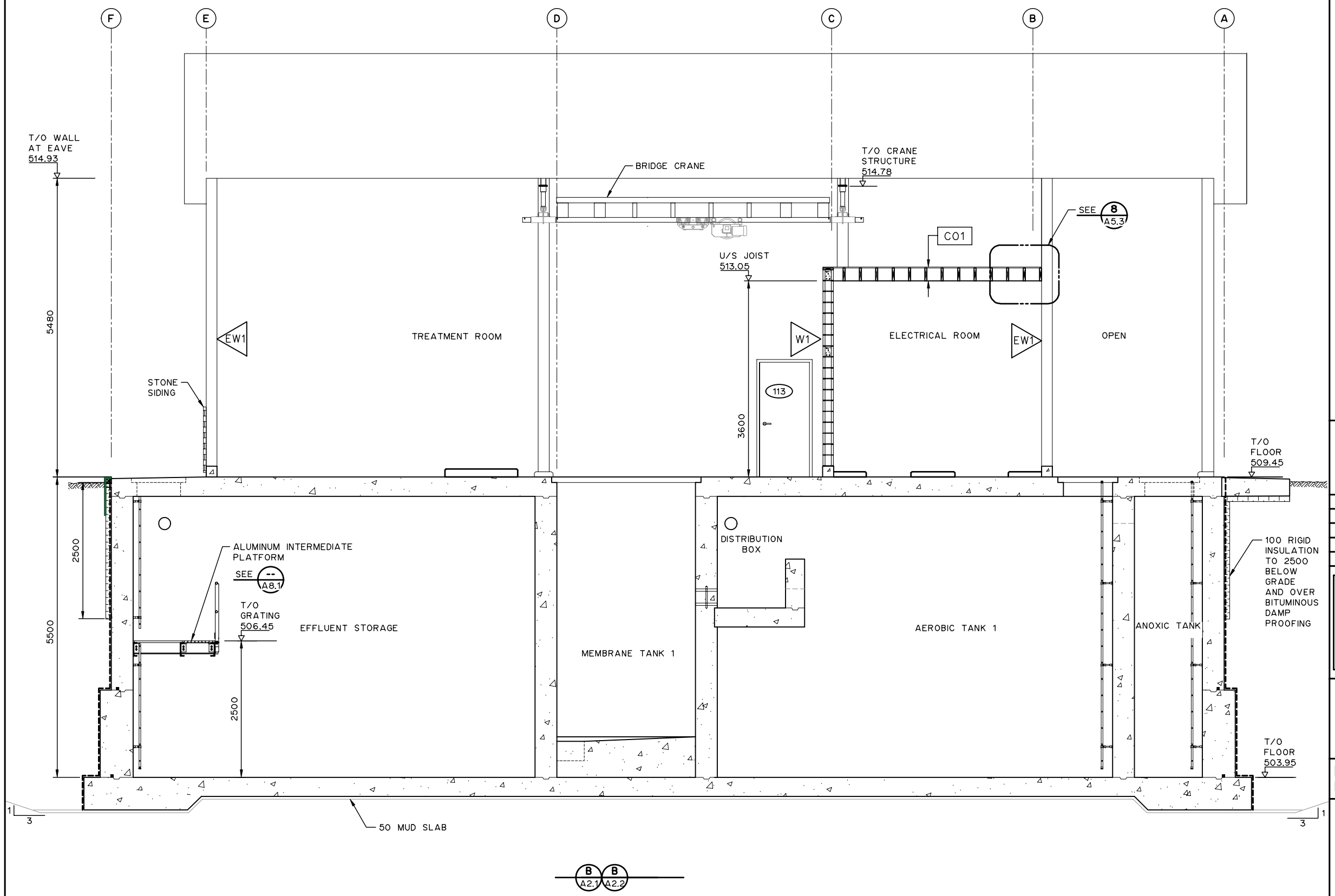

NOTES:

1. ALL DIMENSIONS ARE IN MILLIMETRES AND ELEVATIONS ARE IN METRES UNLESS NOTED OTHERWISE.
2. SEE STRUCTURAL DRAWINGS FOR LOCATION AND SIZE OF CONCRETE EQUIPMENT PADS.
3. SEE DRAWING A4.1 FOR DOOR, AND WINDOW SCHEDULES.
4. SEE DRAWING A4.1 FOR ROOM FINISH SCHEDULE.
5. TOP OF FLOOR ELEVATIONS SHOWN INDICATE MAXIMUM FLOOR ELEVATION WITH THE ROOM.
6. MUD SLAB TO EXTEND FULL WIDTH OF EXCAVATION.
7. ALL LADDERS TO P.I.P. REQUIREMENTS.
8. SEE STRUCTURAL FOR ALL CONCRETE DETAILS.
9. BOTTOM OF EXCAVATION IS TO BE REVIEWED BY GEOTECHNICAL ENGINEER PRIOR TO MUD SLAB. MUD SLAB MUST BE PLACED IMMEDIATELY FOLLOWING GEOTECHNICAL ENGINEER'S APPROVAL.
10. SEE DRAWING A11.1 FOR BRIDGE CRANE SUPPORT DETAILS.

THIS DRAWING MAY HAVE BEEN MODIFIED FROM ITS ORIGINAL SIZE. ALL SCALE NOTATIONS INDICATED ARE BASED ON 11"x17" FORMAT DRAWINGS

ISSUE	YY-MM-DD	REVISION
2	21-01-15	FOR CONSTRUCTION
1	20-10-15	FOR TENDER

Association of Professional Engineers & Geoscientists of Saskatchewan
CERTIFICATE OF AUTHORIZATION
MPE Engineering Ltd.
Number C1334
Permission to Consult held by:

Discipline	Sk. Reg. No.	Signature
STRUCTURAL	34196	

PROFESSIONAL ENGINEER W. DONG MEMBER 34196 2021 01 15 SASKATCHEWAN

MPE Engineering Ltd.

ENGLISH RIVER ENTERPRISES PROPERTY MANAGEMENT LP

WASTEWATER TREATMENT PLANT
ARCHITECTURAL
SECTIONS

DESIGNED	I.K., W.W.L.S.	JOB	7603-002-00
DRAWN	D.F.F.	SCALE	1:75
DATE	NOVEMBER 2020	DRAWING	A3.2

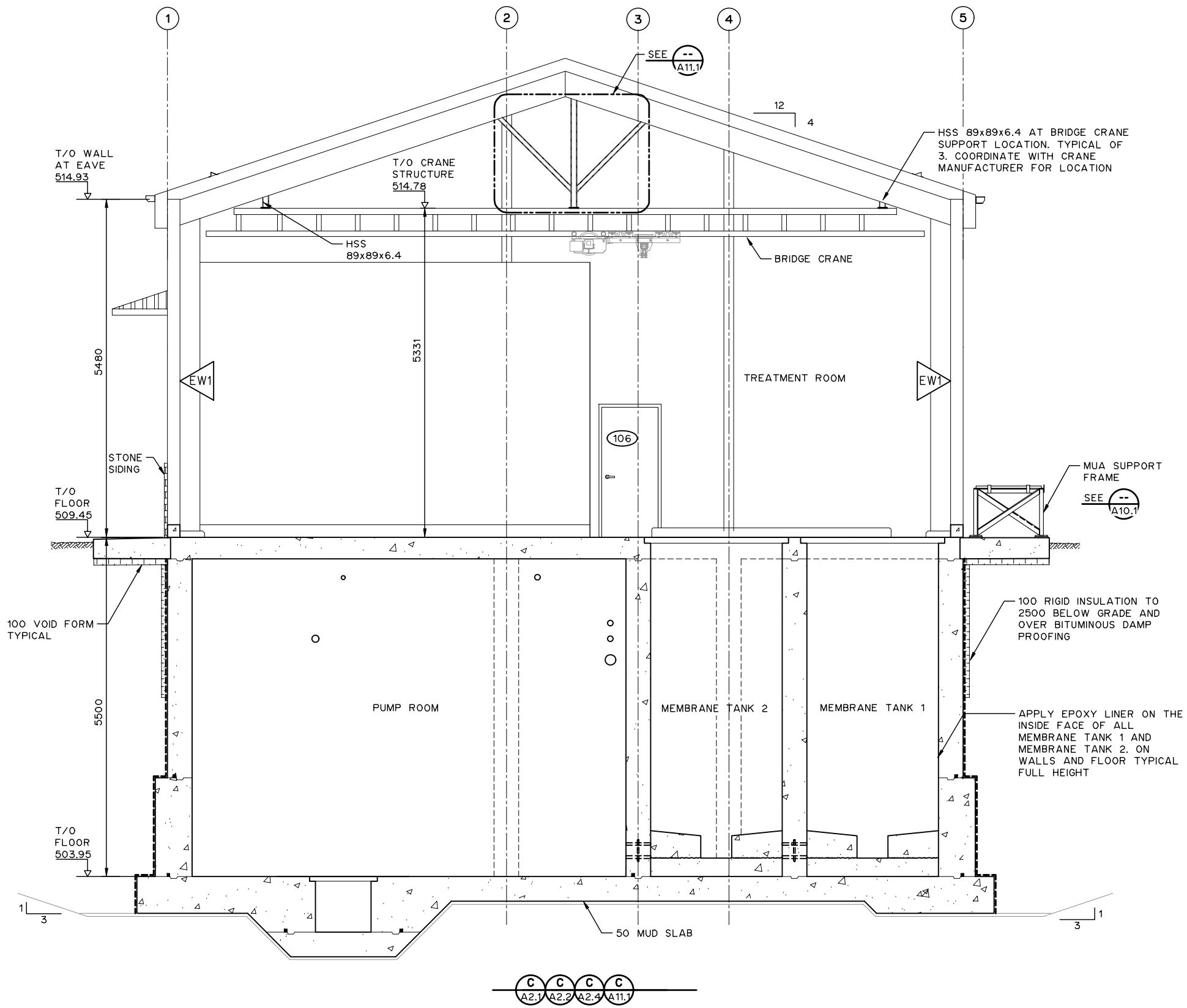

NOTES:

1. ALL DIMENSIONS ARE IN MILLIMETRES AND ELEVATIONS ARE IN METRES UNLESS NOTED OTHERWISE.
2. SEE STRUCTURAL DRAWINGS FOR LOCATION AND SIZE OF CONCRETE EQUIPMENT PADS.
3. SEE DRAWING A4.1 FOR DOOR, AND WINDOW SCHEDULES.
4. SEE DRAWING A4.1 FOR ROOM FINISH SCHEDULE.
5. TOP OF FLOOR ELEVATIONS SHOWN INDICATE MAXIMUM FLOOR ELEVATION WITH THE ROOM.
6. MUD SLAB TO EXTEND FULL WIDTH OF EXCAVATION.
7. ALL LADDERS TO P.I.P. REQUIREMENTS.
8. SEE STRUCTURAL FOR ALL CONCRETE DETAILS.
9. BOTTOM OF EXCAVATION IS TO BE REVIEWED BY GEOTECHNICAL ENGINEER PRIOR TO MUD SLAB. MUD SLAB MUST BE PLACED IMMEDIATELY FOLLOWING GEOTECHNICAL ENGINEER'S APPROVAL.
10. SEE DRAWING A11.1 FOR BRIDGE CRANE SUPPORT DETAILS.

THIS DRAWING MAY HAVE BEEN MODIFIED FROM ITS ORIGINAL SIZE. ALL SCALE NOTATIONS INDICATED ARE BASED ON 11"x17" FORMAT DRAWINGS

ISSUE	YY-MM-DD	REVISION
2	21-01-15	FOR CONSTRUCTION
1	20-10-15	FOR TENDER

Association of Professional Engineers & Geoscientists of Saskatchewan
CERTIFICATE OF AUTHORIZATION
MPE Engineering Ltd.
Number C1334
Permission to Consult held by:

Discipline	Sk. Reg. No.	Signature
STRUCTURAL	34196	

PROFESSIONAL ENGINEER W. SONG MEMBER 34196 2021 01 15 SASKATCHEWAN

MPE Engineering Ltd.

ENGLISH RIVER ENTERPRISES PROPERTY MANAGEMENT LP

WASTEWATER TREATMENT PLANT
ARCHITECTURAL
SECTIONS

DESIGNED	I.K., W.W.L.S.	JOB	7603-002-00
DRAWN	D.F.F.	SCALE	1:75
DATE	NOVEMBER 2020	DRAWING	A3.3

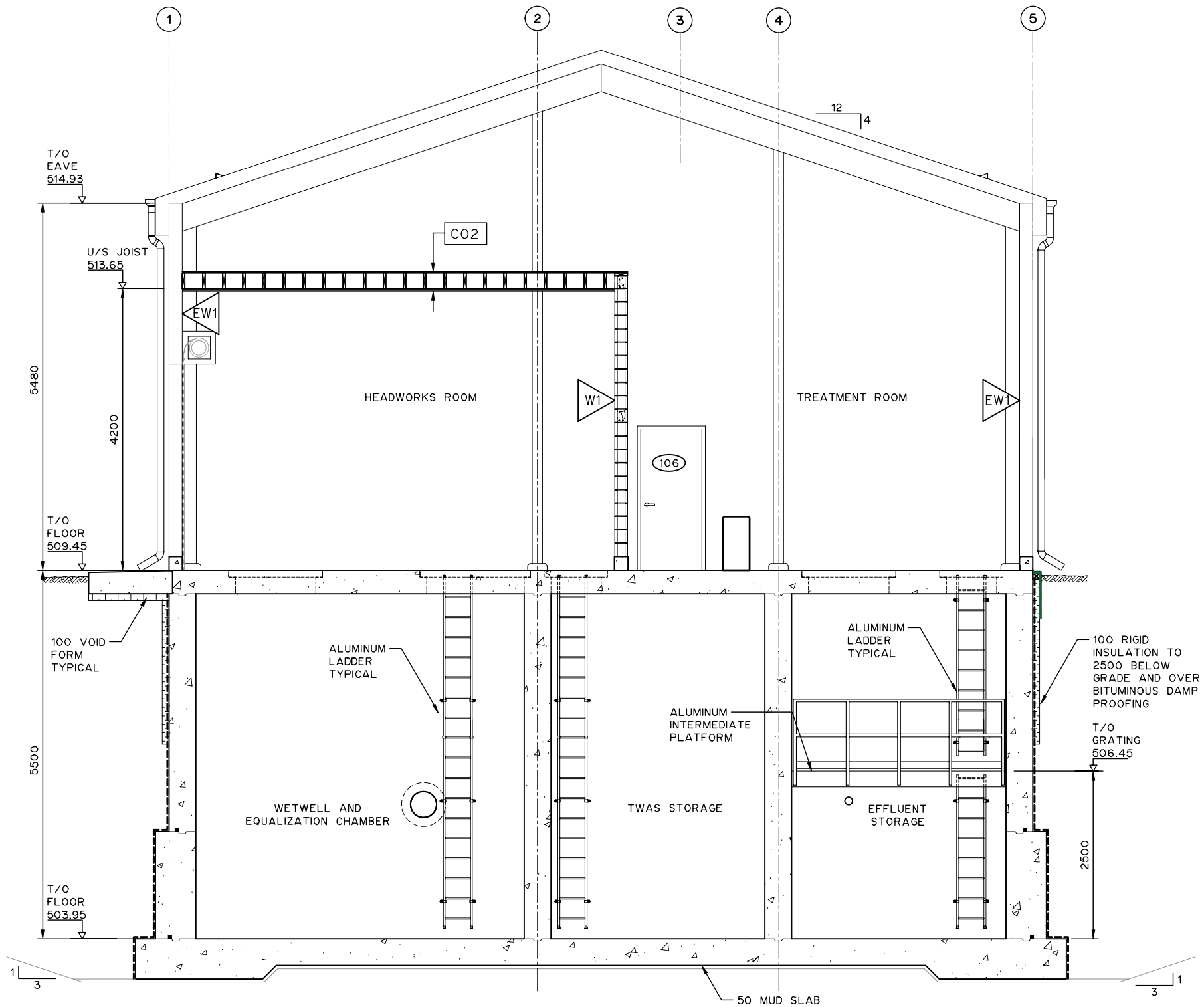

D A2.1 D A2.2

NOTES:

1. ALL DIMENSIONS ARE IN MILLIMETRES AND ELEVATIONS ARE IN METRES UNLESS NOTED OTHERWISE.
2. SEE STRUCTURAL DRAWINGS FOR LOCATION AND SIZE OF CONCRETE EQUIPMENT PADS.
3. SEE DRAWING A4.1 FOR DOOR, AND WINDOW SCHEDULES.
4. SEE DRAWING A4.1 FOR ROOM FINISH SCHEDULE.
5. TOP OF FLOOR ELEVATIONS SHOWN INDICATE MAXIMUM FLOOR ELEVATION WITH THE ROOM.
6. MUD SLAB TO EXTEND FULL WIDTH OF EXCAVATION.
7. ALL LADDERS TO P.I.P. REQUIREMENTS.
8. SEE STRUCTURAL FOR ALL CONCRETE DETAILS.
9. BOTTOM OF EXCAVATION IS TO BE REVIEWED BY GEOTECHNICAL ENGINEER PRIOR TO MUD SLAB. MUD SLAB MUST BE PLACED IMMEDIATELY FOLLOWING GEOTECHNICAL ENGINEER'S APPROVAL.
10. SEE DRAWING A11.1 FOR BRIDGE CRANE SUPPORT DETAILS.

THIS DRAWING MAY HAVE BEEN MODIFIED FROM ITS ORIGINAL SIZE. ALL SCALE NOTATIONS INDICATED ARE BASED ON 11"x17" FORMAT DRAWINGS

ISSUE	YY-MM-DD	REVISION
2	21-01-15	FOR CONSTRUCTION
1	20-10-15	FOR TENDER

Association of Professional Engineers & Geoscientists of Saskatchewan
CERTIFICATE OF AUTHORIZATION
MPE Engineering Ltd.
Number C1334
Permission to Consult held by:

Discipline	Sk. Reg. No.	Signature
STRUCTURAL	34196	

PROFESSIONAL ENGINEER W. DONG MEMBER 34196 2021 01 15 SASKATCHEWAN

MPE Engineering Ltd.

ENGLISH RIVER ENTERPRISES
PROPERTY MANAGEMENT LP

WASTEWATER TREATMENT PLANT
ARCHITECTURAL
SECTIONS

DESIGNED	I.K., W.W.L.S.	JOB	7603-002-00
DRAWN	D.F.F.	SCALE	1:75
DATE	NOVEMBER 2020	DRAWING	A3.4

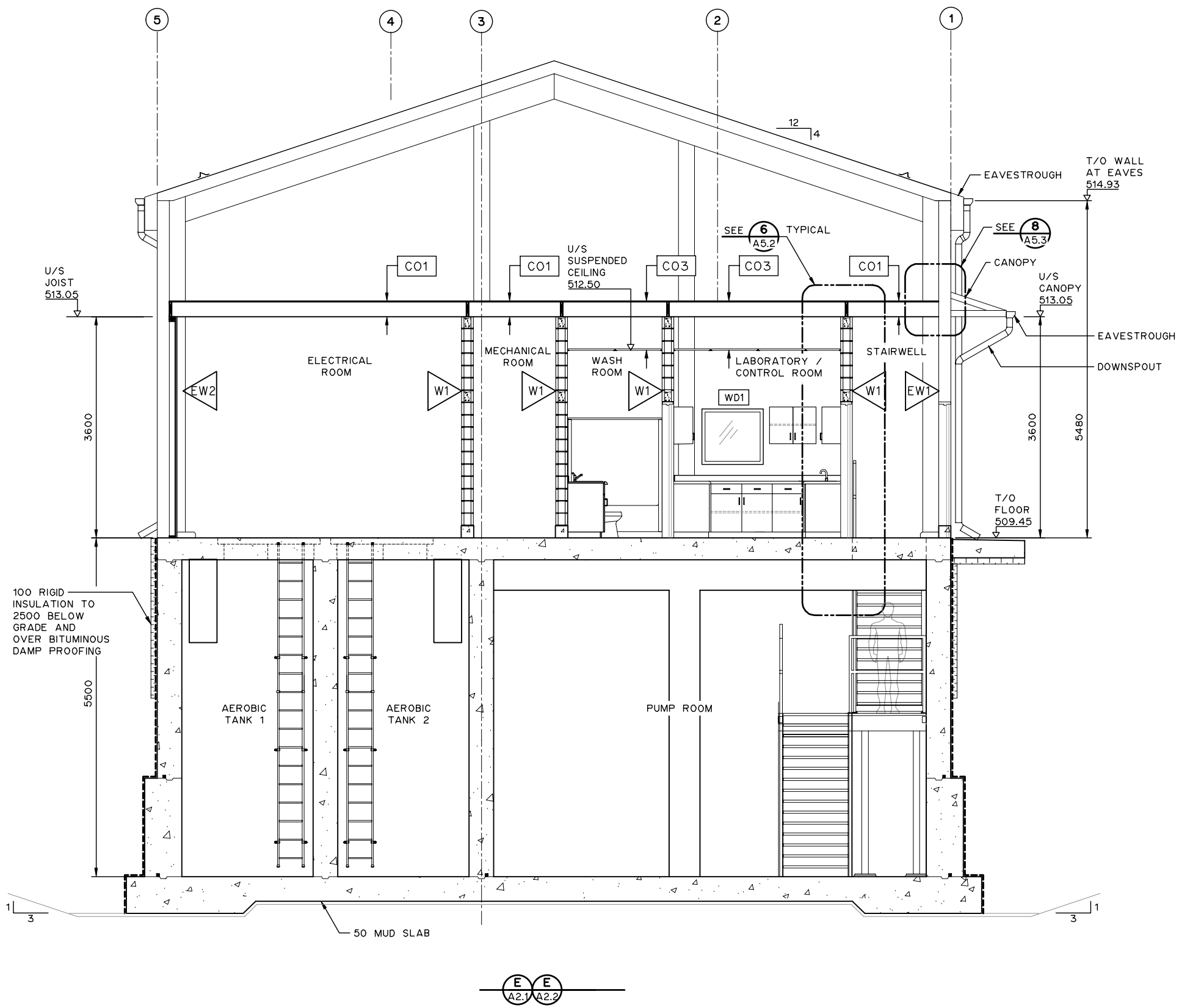

NOTES:

1. ALL DIMENSIONS ARE IN MILLIMETRES AND ELEVATIONS ARE IN METRES UNLESS NOTED OTHERWISE.
2. SEE STRUCTURAL DRAWINGS FOR LOCATION AND SIZE OF CONCRETE EQUIPMENT PADS.
3. SEE DRAWING A4.1 FOR DOOR, AND WINDOW SCHEDULES.
4. SEE DRAWING A4.1 FOR ROOM FINISH SCHEDULE.
5. TOP OF FLOOR ELEVATIONS SHOWN INDICATE MAXIMUM FLOOR ELEVATION WITH THE ROOM.
6. MUD SLAB TO EXTEND FULL WIDTH OF EXCAVATION.
7. ALL LADDERS TO P.I.P. REQUIREMENTS.
8. SEE STRUCTURAL FOR ALL CONCRETE DETAILS.
9. BOTTOM OF EXCAVATION IS TO BE REVIEWED BY GEOTECHNICAL ENGINEER PRIOR TO MUD SLAB. MUD SLAB MUST BE PLACED IMMEDIATELY FOLLOWING GEOTECHNICAL ENGINEER'S APPROVAL.
10. SEE DRAWING A11.1 FOR BRIDGE CRANE SUPPORT DETAILS.

THIS DRAWING MAY HAVE BEEN MODIFIED FROM ITS ORIGINAL SIZE. ALL SCALE NOTATIONS INDICATED ARE BASED ON 11"x17" FORMAT DRAWINGS

ISSUE	YY-MM-DD	REVISION
2	21-01-15	FOR CONSTRUCTION
1	20-10-15	FOR TENDER

Association of Professional Engineers & Geoscientists of Saskatchewan
CERTIFICATE OF AUTHORIZATION
MPE Engineering Ltd.
Number C1334
Permission to Consult held by:

Discipline	Sk. Reg. No.	Signature
STRUCTURAL	34196	

PROFESSIONAL ENGINEER W. SONG MEMBER 34196 2021 01 15 SASKATCHEWAN

MPE Engineering Ltd.

ENGLISH RIVER ENTERPRISES
PROPERTY MANAGEMENT LP

WASTEWATER TREATMENT PLANT
ARCHITECTURAL
SECTIONS

DESIGNED	I.K., W.W.L.S.	JOB	7603-002-00
DRAWN	D.F.F.	SCALE	1:75
DATE	NOVEMBER 2020	DRAWING	A3.5

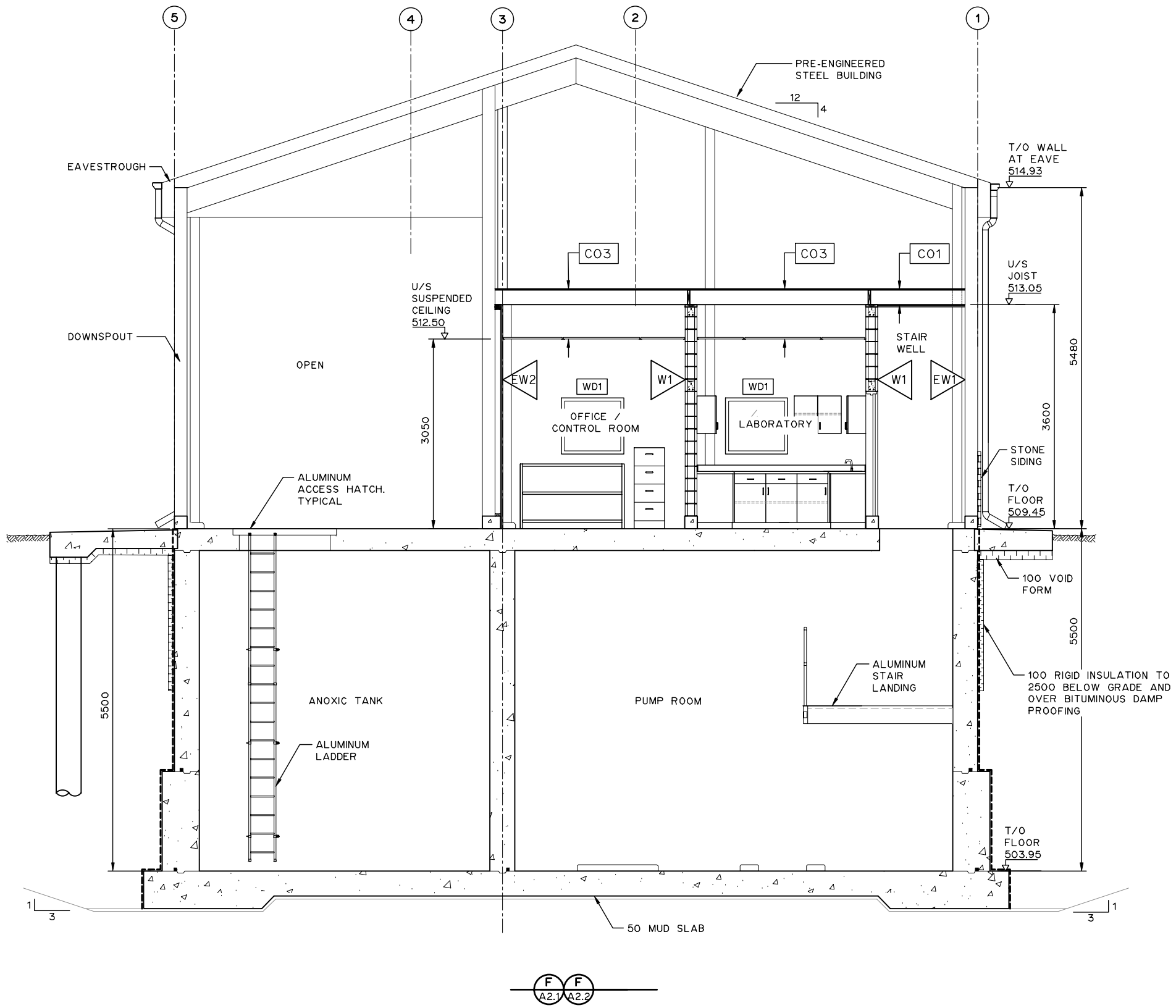

NOTES:

1. ALL DIMENSIONS ARE IN MILLIMETRES AND ELEVATIONS ARE IN METRES UNLESS NOTED OTHERWISE.
2. SEE STRUCTURAL DRAWINGS FOR LOCATION AND SIZE OF CONCRETE EQUIPMENT PADS.
3. SEE DRAWING A4.1 FOR DOOR, AND WINDOW SCHEDULES.
4. SEE DRAWING A4.1 FOR ROOM FINISH SCHEDULE.
5. TOP OF FLOOR ELEVATIONS SHOWN INDICATE MAXIMUM FLOOR ELEVATION WITH THE ROOM.
6. MUD SLAB TO EXTEND FULL WIDTH OF EXCAVATION.
7. ALL LADDERS TO P.I.P. REQUIREMENTS.
8. SEE STRUCTURAL FOR ALL CONCRETE DETAILS.
9. BOTTOM OF EXCAVATION IS TO BE REVIEWED BY GEOTECHNICAL ENGINEER PRIOR TO MUD SLAB. MUD SLAB MUST BE PLACED IMMEDIATELY FOLLOWING GEOTECHNICAL ENGINEER'S APPROVAL.
10. SEE DRAWING A11.1 FOR BRIDGE CRANE SUPPORT DETAILS.

THIS DRAWING MAY HAVE BEEN MODIFIED FROM ITS ORIGINAL SIZE. ALL SCALE NOTATIONS INDICATED ARE BASED ON 11"x17" FORMAT DRAWINGS

ISSUE	YY-MM-DD	REVISION
2	21-01-15	FOR CONSTRUCTION
1	20-10-15	FOR TENDER

Association of Professional Engineers & Geoscientists of Saskatchewan
CERTIFICATE OF AUTHORIZATION
MPE Engineering Ltd.
Number C1334
Permission to Consult held by:

Discipline	Sk. Reg. No.	Signature
STRUCTURAL	34196	

PROFESSIONAL ENGINEER
W. SONG
MEMBER 34196
2021 01 15
SASKATCHEWAN

MPE Engineering Ltd.

ENGLISH RIVER ENTERPRISES
PROPERTY MANAGEMENT LP

WASTEWATER TREATMENT PLANT
ARCHITECTURAL
SECTIONS

DESIGNED	I.K., W.W.L.S.	JOB	7603-002-00
DRAWN	D.F.F.	SCALE	1:75
DATE	NOVEMBER 2020	DRAWING	A3.6

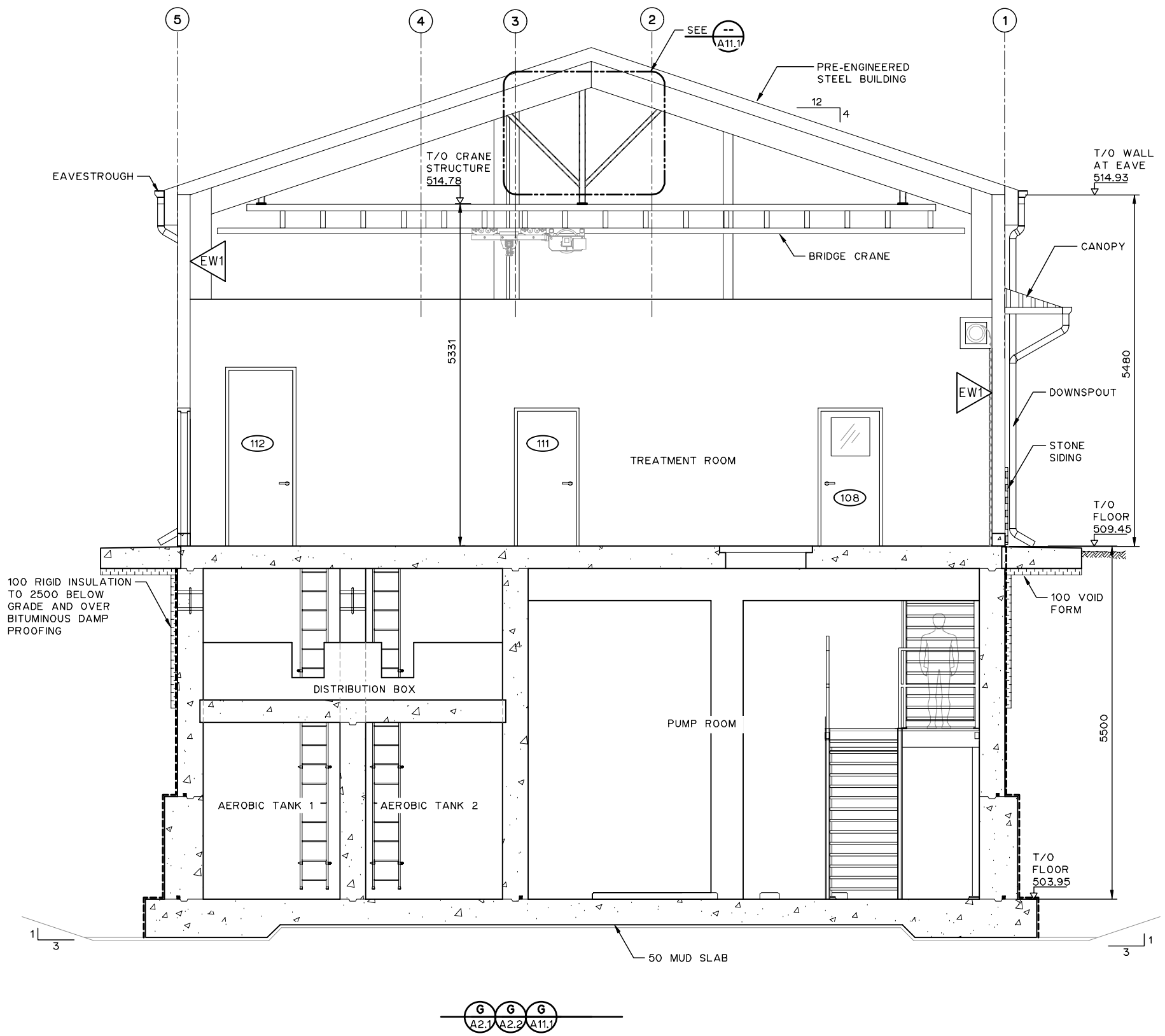

NOTES:

1. ALL DIMENSIONS ARE IN MILLIMETRES AND ELEVATIONS ARE IN METRES UNLESS NOTED OTHERWISE.
2. SEE STRUCTURAL DRAWINGS FOR LOCATION AND SIZE OF CONCRETE EQUIPMENT PADS.
3. SEE DRAWING A4.1 FOR DOOR, AND WINDOW SCHEDULES.
4. SEE DRAWING A4.1 FOR ROOM FINISH SCHEDULE.
5. TOP OF FLOOR ELEVATIONS SHOWN INDICATE MAXIMUM FLOOR ELEVATION WITH THE ROOM.
6. MUD SLAB TO EXTEND FULL WIDTH OF EXCAVATION.
7. ALL LADDERS TO P.I.P. REQUIREMENTS.
8. SEE STRUCTURAL FOR ALL CONCRETE DETAILS.
9. BOTTOM OF EXCAVATION IS TO BE REVIEWED BY GEOTECHNICAL ENGINEER PRIOR TO MUD SLAB. MUD SLAB MUST BE PLACED IMMEDIATELY FOLLOWING GEOTECHNICAL ENGINEER'S APPROVAL.
10. SEE DRAWING A11.1 FOR BRIDGE CRANE SUPPORT DETAILS.

THIS DRAWING MAY HAVE BEEN MODIFIED FROM ITS ORIGINAL SIZE. ALL SCALE NOTATIONS INDICATED ARE BASED ON 11"x17" FORMAT DRAWINGS

ISSUE	YY-MM-DD	REVISION
2	21-01-15	FOR CONSTRUCTION
1	20-10-15	FOR TENDER

Association of Professional Engineers & Geoscientists of Saskatchewan
CERTIFICATE OF AUTHORIZATION
MPE Engineering Ltd.
Number C1334
Permission to Consult held by:

Discipline	Sk. Reg. No.	Signature
STRUCTURAL	34196	

PROFESSIONAL ENGINEER W. SONG MEMBER 34196 2021 01 15 SASKATCHEWAN

MPE Engineering Ltd.

ENGLISH RIVER ENTERPRISES PROPERTY MANAGEMENT LP

WASTEWATER TREATMENT PLANT
ARCHITECTURAL
SECTIONS

DESIGNED	I.K., W.W.L.S.	JOB	7603-002-00
DRAWN	D.F.F.	SCALE	1:75
DATE	NOVEMBER 2020	DRAWING	A3.7

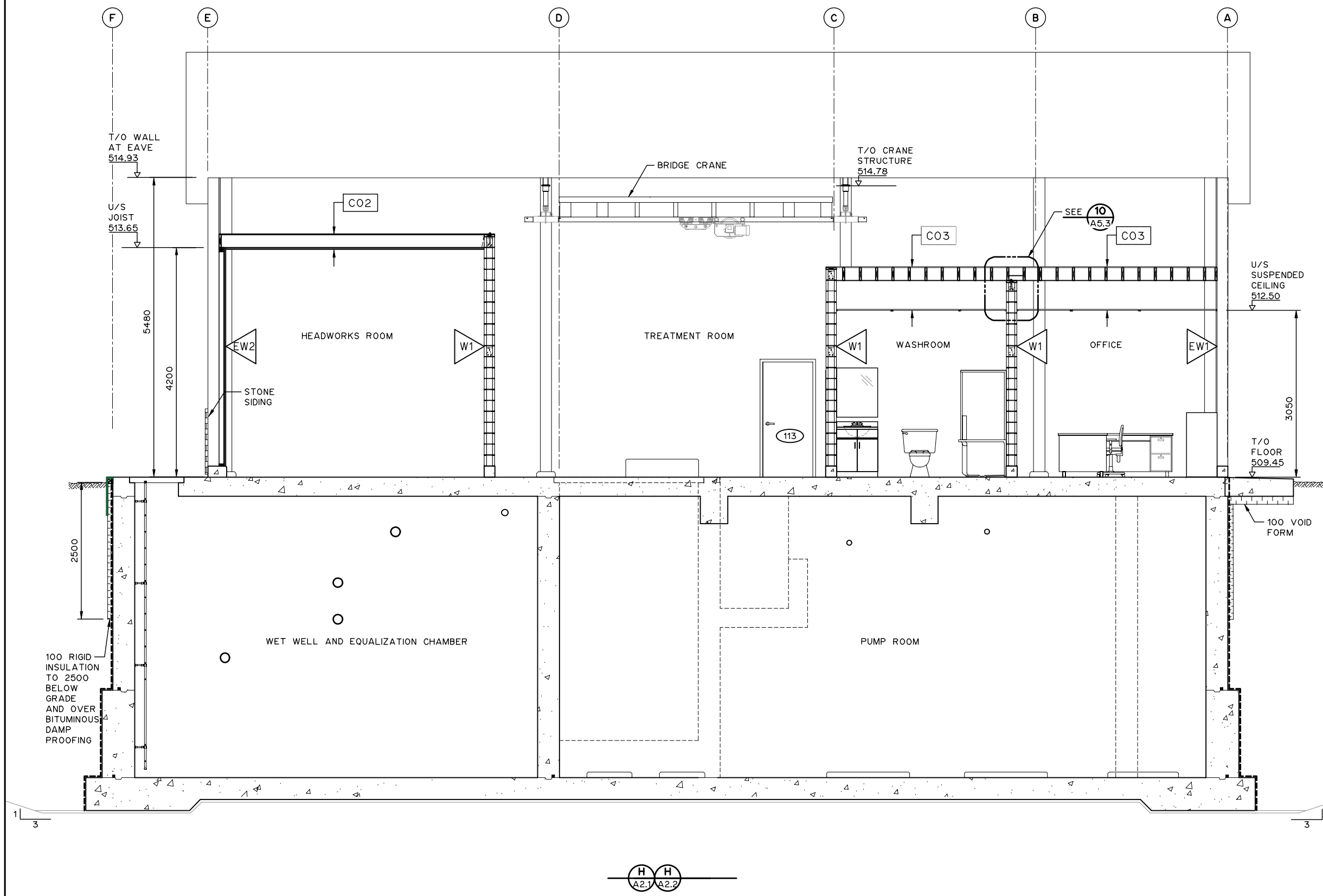

NOTES:

1. ALL DIMENSIONS ARE IN MILLIMETRES AND ELEVATIONS ARE IN METRES UNLESS NOTED OTHERWISE.
2. SEE STRUCTURAL DRAWINGS FOR LOCATION AND SIZE OF CONCRETE EQUIPMENT PADS.
3. SEE DRAWING A4.1 FOR DOOR, AND WINDOW SCHEDULES.
4. SEE DRAWING A4.1 FOR ROOM FINISH SCHEDULE.
5. TOP OF FLOOR ELEVATIONS SHOWN INDICATE MAXIMUM FLOOR ELEVATION WITH THE ROOM.
6. MUD SLAB TO EXTEND FULL WIDTH OF EXCAVATION.
7. ALL LADDERS TO P.I.P. REQUIREMENTS.
8. SEE STRUCTURAL FOR ALL CONCRETE DETAILS.
9. BOTTOM OF EXCAVATION IS TO BE REVIEWED BY GEOTECHNICAL ENGINEER PRIOR TO MUD SLAB. MUD SLAB MUST BE PLACED IMMEDIATELY FOLLOWING GEOTECHNICAL ENGINEER'S APPROVAL.
10. SEE DRAWING A11.1 FOR BRIDGE CRANE SUPPORT DETAILS.

THIS DRAWING MAY HAVE BEEN MODIFIED FROM ITS ORIGINAL SIZE. ALL SCALE NOTATIONS INDICATED ARE BASED ON 11"x17" FORMAT DRAWINGS

ISSUE	YY-MM-DD	REVISION
2	21-01-15	FOR CONSTRUCTION
1	20-10-15	FOR TENDER

Association of Professional Engineers & Geoscientists of Saskatchewan
CERTIFICATE OF AUTHORIZATION
MPE Engineering Ltd.
Number C1334
Permission to Consult held by:

Discipline	Sk. Reg. No.	Signature
STRUCTURAL	34196	

PROFESSIONAL ENGINEER
W. BONG
MEMBER 34196
2021 01 15
YR. MO. DAY
SASKATCHEWAN

MPE Engineering Ltd.

ENGLISH RIVER ENTERPRISES PROPERTY MANAGEMENT LP

WASTEWATER TREATMENT PLANT
ARCHITECTURAL
SECTIONS

DESIGNED	I.K., W.W.L.S.	JOB	7603-002-00
DRAWN	D.F.F.	SCALE	1:75
DATE	NOVEMBER 2020	DRAWING	A3.8

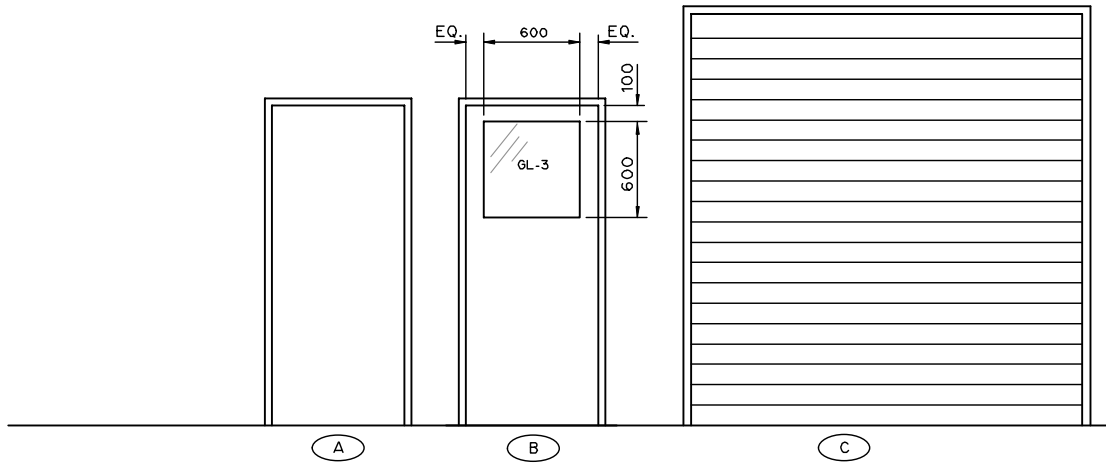

GL-1	DOUBLE PANE CLEAR FLOAT
GL-2	SINGLE PANE WIRED GLASS
GL-3	SINGLE PANE TEMPERED
GL-4	DOUBLE PANE WIRED GLASS

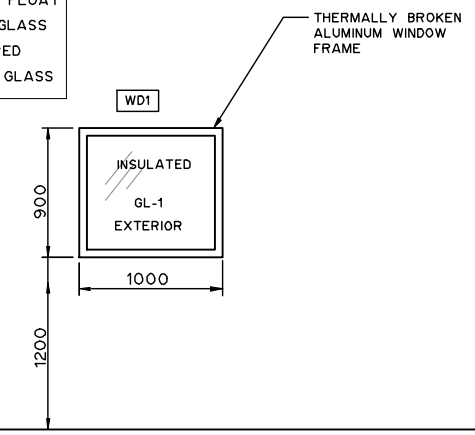

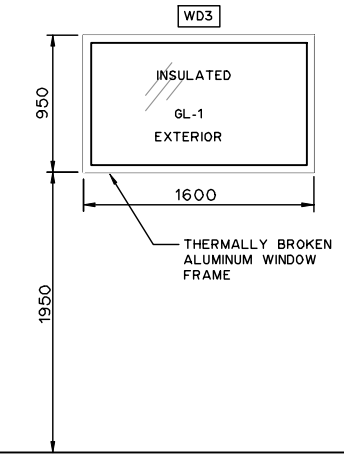

NOTES:

1. ALL DIMENSIONS ARE IN MILLIMETRES AND ELEVATIONS ARE IN METRES UNLESS NOTED OTHERWISE.

MARK	NOMINAL SIZE	DOOR TYPE	MATERIAL DOOR-FRAME	FINISH DOOR-FRAME	FIRE RESIST. RATING (MIN)	GLAZING	COMMENTS
101	914x2134	A	HOLLOW METAL/STEEL	PAINT/PAINT	--	--	INSULATED DOOR AND FRAME
102	3050x3050	C			--	--	
103	914x2134	A	HOLLOW METAL/STEEL	PAINT/PAINT	--	--	INSULATED DOOR AND FRAME
104	2500x3050	C			--	--	
105	914x2134	A	HOLLOW METAL/STEEL	PAINT/PAINT	--	--	INSULATED DOOR AND FRAME
106	914x2134	A	HOLLOW METAL/STEEL	PAINT/PAINT	--	--	INSULATED DOOR AND FRAME
107	914x2134	A	HOLLOW METAL/STEEL	PAINT/PAINT	45	--	
108	914x2134	B	HOLLOW METAL/STEEL	PAINT/PAINT	--	TEMPERED	
109	914x2134	B	HOLLOW METAL/STEEL	PAINT/PAINT	--	TEMPERED	
110	914x2134	A	HOLLOW METAL/STEEL	PAINT/PAINT	--	--	
111	914x2134	A	HOLLOW METAL/STEEL	PAINT/PAINT	45	--	
112	914x2740	A	HOLLOW METAL/STEEL	PAINT/PAINT	45	--	
113	914x2134	A	HOLLOW METAL/STEEL	PAINT/PAINT	--	--	INSULATED DOOR AND FRAME

CEILING CONSTRUCTION ASSEMBLIES:

CO1 — 45 MINUTE FIRE RESISTANCE RATING
16 PLYWOOD
38x235 @ 300 O.C.
2-16 TYPE X GYPSUM BOARD

CO2 — 45 MINUTE FIRE RESISTANCE RATING
16 PLYWOOD
38x235 @ 300 O.C.
2-16 TYPE X GYPSUM BOARD
PREFINISHED METAL CLADDING

CO3 — 16 PLYWOOD
38x235 @ 300 O.C.
SUSPENDED CEILING TILE

EXTERIOR WALL CONSTRUCTION ASSEMBLIES:

EW1 — PREFINISHED INTERIOR METAL LINER
PRE-ENGINEERED BUILDING WALL CONSTRUCTION
PRE-FINISHED EXTERIOR METAL CLADDING, ZINC GREY
(SEE ELEVATIONS FOR LOCATION OF STONE VENEER)

EW2 — PREFINISHED INTERIOR METAL LINER
2-16 TYPE X GYPSUM BOARD
38x89 @ 300 O.C.
PRE-ENGINEERED BUILDING WALL CONSTRUCTION
PRE-FINISHED METAL CLADDING, ZINC GREY (SEE ELEVATIONS FOR LOCATION OF STONE VENEER)

INTERIOR WALL CONSTRUCTION ASSEMBLIES:

W1 — 200 CONCRETE BLOCK WALL, PAINTED

ROOM FINISH SCHEDULE

ROOM	FLOOR	BASE	WALLS - TYPE-FINISH	CEILING - TYPE-FINISH	COMMENTS
STAIRWELL	EPOXY	EPOXY	METAL LINER - PREFINISHED AND CONCRETE BLOCK PAINTED	DRYWALL - PAINTED	45-MIN FIRE SEPARATION ON INTERIOR WALLS AND CEILING
LAB/CONTROL ROOM	EPOXY	EPOXY	METAL LINER - PREFINISHED AND CONCRETE BLOCK PAINTED	SUSPENDED CEILING TILES	
OFFICE	EPOXY	EPOXY	METAL LINER - PREFINISHED AND CONCRETE BLOCK PAINTED	SUSPENDED CEILING TILES	
WASHROOM	EPOXY	EPOXY	CONCRETE BLOCK - PAINTED	SUSPENDED CEILING TILES	
MECHANICAL ROOM	EPOXY	EPOXY	CONCRETE BLOCK - PAINTED	DRYWALL - PAINTED	45-MIN FIRE SEPARATION ON INTERIOR WALLS AND CEILING
ELECTRICAL ROOM	EPOXY	EPOXY	CONCRETE BLOCK - PAINTED	DRYWALL - PAINTED	45-MIN FIRE SEPARATION ON INTERIOR WALLS AND CEILING
TREATMENT ROOM	EPOXY	EPOXY	METAL LINER - PREFINISHED AND CONCRETE BLOCK PAINTED	METAL LINER - PREFINISHED	
HEADWORKS ROOM	EPOXY	EPOXY	METAL LINER - PREFINISHED AND CONCRETE BLOCK PAINTED	METAL LINER - PREFINISHED	45-MIN FIRE SEPARATION ON INTERIOR WALLS AND CEILING
PUMP ROOM	EPOXY	--	SACK-RUBBED FINISHED CONCRETE	SMOOTH FORMED CONCRETE	APPLY CEMENTITIOUS WATERPROOFING ON TOP OF THE ENTIRE LOWER CONCRETE FLOOR, ON THE INSIDE FACE OF ALL EXTERIOR WALLS, ON THE WET SIDE OF THE WALLS BETWEEN PUMP ROOM AND ADJACENT WASTEWATER TREATMENT TANKS. EXTEND WATERPROOFING ON ADJACENT INTERIOR WALLS 1000 HORIZONTALLY FROM EXTERIOR WALLS AND PUMP ROOM WALLS. REFER TO SPECIFICATION SECTION 07150
WETWELL AND EQUALIZATION CHAMBER	SMOOTH FINISHED CONCRETE	--	SMOOTH FORMED CONCRETE	SMOOTH FORMED CONCRETE	
TWAS STORAGE	SMOOTH FINISHED CONCRETE	--	SMOOTH FORMED CONCRETE	SMOOTH FORMED CONCRETE	
EFFLUENT STORAGE	SMOOTH FINISHED CONCRETE	--	SMOOTH FORMED CONCRETE	SMOOTH FORMED CONCRETE	
ANOXIC TANK	SMOOTH FINISHED CONCRETE	--	SMOOTH FORMED CONCRETE	SMOOTH FORMED CONCRETE	
AEROBIC TANK 1	SMOOTH FINISHED CONCRETE	--	SMOOTH FORMED CONCRETE	SMOOTH FORMED CONCRETE	
AEROBIC TANK 2	SMOOTH FINISHED CONCRETE	--	SMOOTH FORMED CONCRETE	SMOOTH FORMED CONCRETE	
DISTRIBUTION BOX	SMOOTH FINISHED CONCRETE	--	SMOOTH FORMED CONCRETE	SMOOTH FORMED CONCRETE	
MEMBRANE TANK 1	CONCRETE TANK EPOXY LINER	--	CONCRETE TANK EPOXY LINER	--	SEE SPECIFICATION 03360 FOR PRODUCT INFORMATION
MEMBRANE TANK 2	CONCRETE TANK EPOXY LINER	--	CONCRETE TANK EPOXY LINER	--	SEE SPECIFICATION 03360 FOR PRODUCT INFORMATION

THIS DRAWING MAY HAVE BEEN MODIFIED FROM ITS ORIGINAL SIZE. ALL SCALE NOTATIONS INDICATED ARE BASED ON 11"x17" FORMAT DRAWINGS

ISSUE	YY-MM-DD	REVISION
2	21-01-15	FOR CONSTRUCTION
1	20-10-15	FOR TENDER

Association of Professional Engineers & Geoscientists of Saskatchewan
CERTIFICATE OF AUTHORIZATION
MPE Engineering Ltd.
Number C1334
Permission to Consult held by:

Discipline	Sk. Reg. No.	Signature
STRUCTURAL	34196	

PROFESSIONAL ENGINEER
W. SONG
MEMBER 34196
2021 01 15
SASKATCHEWAN

MPE Engineering Ltd.

ENGLISH RIVER ENTERPRISES PROPERTY MANAGEMENT LP

WASTEWATER TREATMENT PLANT
ARCHITECTURAL
SCHEDULES

DESIGNED	W.W.L.S.	JOB	7603-002-00
DRAWN	D.F.F.	SCALE	
DATE	NOVEMBER 2020	DRAWING	A4.1

SIGN SCHEDULE

SIGN	REQUIRED	LOCATION	LAMACOID SIGN	GRAPHIC SIGN	ACKLANDS GRAINGER PRODUCT NO.
WASHROOM	1	WASHROOM DOOR	WASHROOM		
WARNING	LOCATED AT ALL HOSE BIBBS	HEADWORKS, PUMP ROOM AND TREATMENT ROOM			
ELECTRICAL ROOM	1	ELECTRICAL ROOM DOOR	ELECTRICAL ROOM	DANGER ELECTRICAL EQUIPMENT AUTHORIZED PERSONNEL ONLY DANGER WEAR EAR PROTECTION DANGER No Smoking Matches or Open Flames	BDY 40658 ALUMINUM BDY 46690 ALUMINUM BDY 42660 ALUMINUM
EXIT	5	ABOVE ALL EXTERIOR DOORS AND ABOVE DOOR 107			
FIRE EXTINGUISHER SIGNAGE	5	ABOVE FIRE EXTINGUISHERS		FIRE EXTINGUISHER	BDY 43491 ALUMINUM
EMERGENCY SAFETY SHOWER SIGNAGE	1	NEAR EMERGENCY SAFETY SHOWERS		EMERGENCY Safety Shower	BDY 41203 ALUMINUM
EMERGENCY EYE WASH SIGNAGE	1	LAB AREA SINK		EMERGENCY Eye Wash	BDY 43481 ALUMINUM
FIRST AID SIGNAGE	2	CONTROL ROOM AND LAB: LOCATION DIRECTED BY ENGINEER		FIRST AID	ACFMFSD923VS VINYL
HEADWORKS ROOM	1	HEADWORKS ROOM DOOR	HEADWORKS ROOM	DANGER No Smoking Matches or Open Flames	BDY 42660 ALUMINUM
WHMIS CLASS D DECAL	3	VARIOUS LOCATIONS AS DIRECTED BY ENGINEER			
WHMIS CLASS E DECAL	1	ALUM TANK		ALUMINUM SULPHATE SOLUTION	
WHMIS CLASS E DECAL	1	SODIUM HYPOCHLORITE (DISINFECTION) TANK		HYPOCHLORITE	
TREATMENT AREA	3	ON DOORS 103, 106, AND 107		DANGER WEAR EAR PROTECTION	BDY 46690 ALUMINUM
WHMIS CLASS E DECAL	1	POLYMER		POLYMER	
WHMIS CLASS E DECAL	1	CITRIC ACID		CITRIC ACID	

NOTES:

1. ALL DIMENSIONS ARE IN MILLIMETRES AND ELEVATIONS ARE IN METRES UNLESS NOTED OTHERWISE.

THIS DRAWING MAY HAVE BEEN MODIFIED FROM ITS ORIGINAL SIZE. ALL SCALE NOTATIONS INDICATED ARE BASED ON 11"x17" FORMAT DRAWINGS

ISSUE	YY-MM-DD	REVISION
2	21-01-15	FOR CONSTRUCTION
1	20-10-15	FOR TENDER

Association of Professional Engineers & Geoscientists of Saskatchewan
CERTIFICATE OF AUTHORIZATION
MPE Engineering Ltd.
Number C1334
Permission to Consult held by:

Discipline	Sk. Reg. No.	Signature
STRUCTURAL	34196	

PROFESSIONAL ENGINEER W. SONG MEMBER 34196 2021 01 15 YR MO DAY SASKATCHEWAN

MPE Engineering Ltd.

ENGLISH RIVER ENTERPRISES PROPERTY MANAGEMENT LP

WASTEWATER TREATMENT PLANT
ARCHITECTURAL
SIGN SCHEDULE

DESIGNED	W.W.L.S.	JOB	7603-002-00
DRAWN	D.F.F.	SCALE	
DATE	NOVEMBER 2020	DRAWING	A4.2

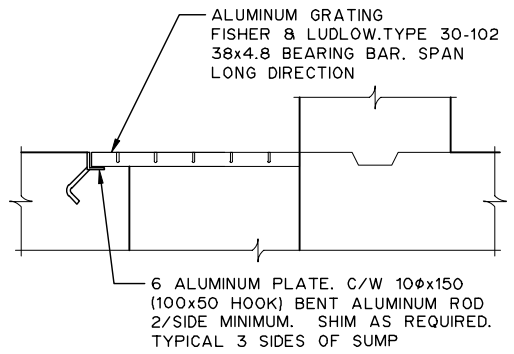

1 A3.1 1:20

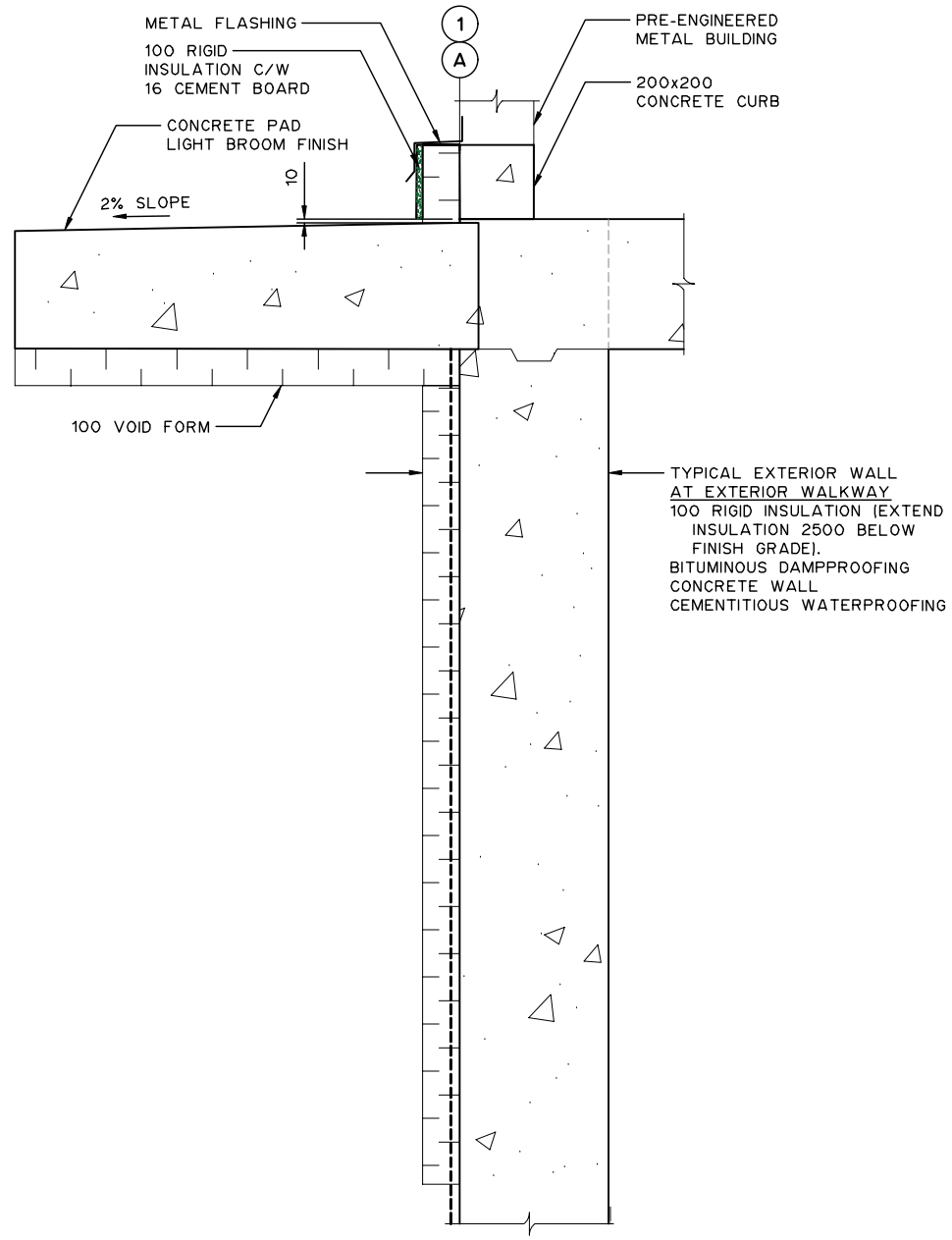

3 A3.1 1:20

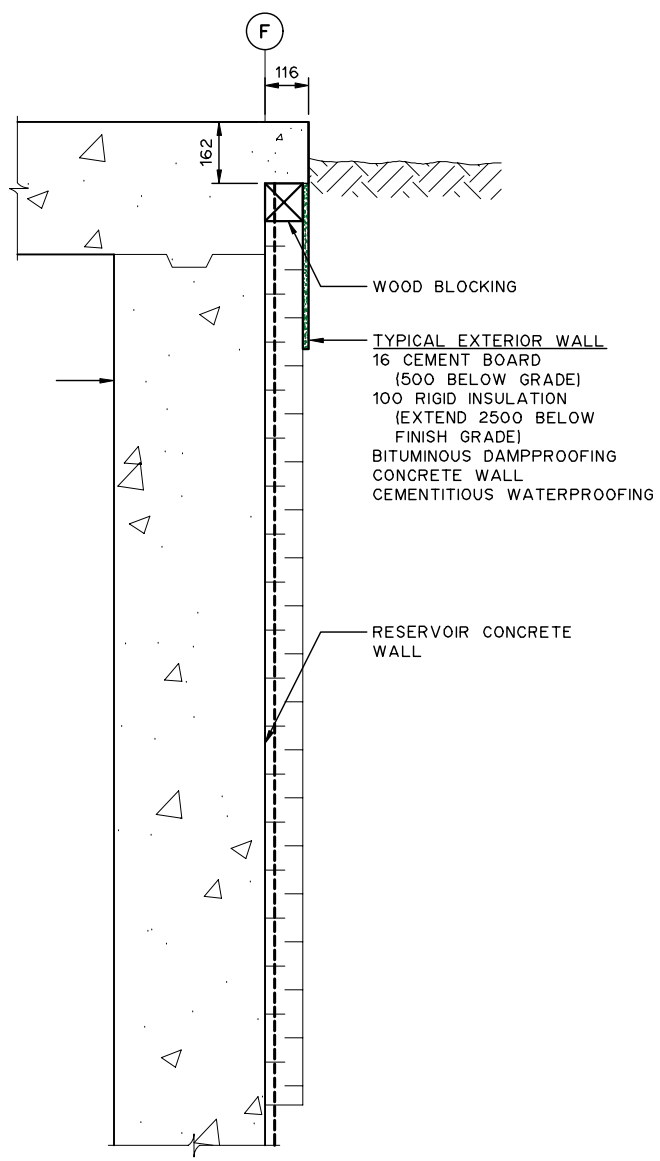

2 A3.1 1:20

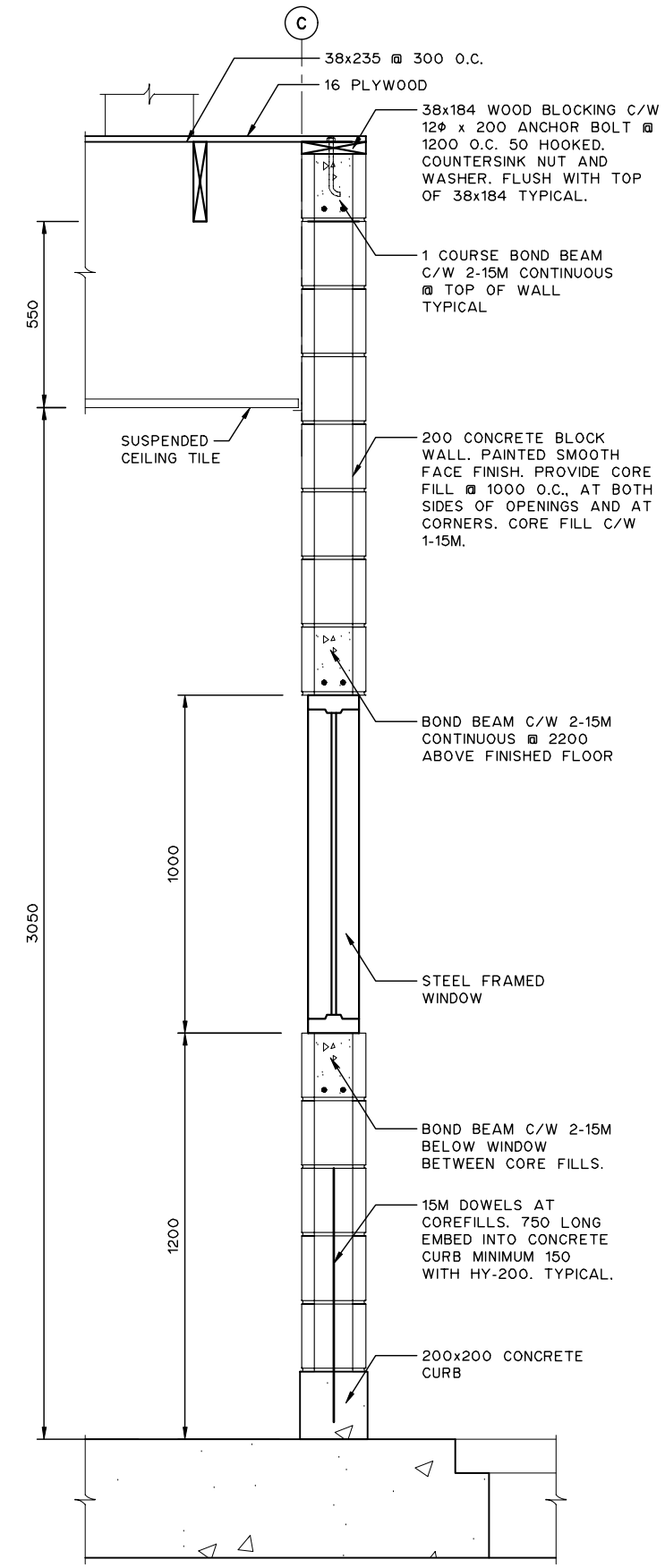

4 A3.1 1:20

NOTES:

1. ALL DIMENSIONS ARE IN MILLIMETRES AND ELEVATIONS ARE IN METRES UNLESS NOTED OTHERWISE.
2. BITUMEN COATING IS REQUIRED FOR ALL ALUMINUM SURFACE AREAS THAT ARE IN CONTACT WITH CONCRETE.

THIS DRAWING MAY HAVE BEEN MODIFIED FROM ITS ORIGINAL SIZE. ALL SCALE NOTATIONS INDICATED ARE BASED ON 11"x17" FORMAT DRAWINGS

ISSUE	YY-MM-DD	REVISION
2	21-01-15	FOR CONSTRUCTION
1	20-10-15	FOR TENDER

Association of Professional Engineers & Geoscientists of Saskatchewan
CERTIFICATE OF AUTHORIZATION
MPE Engineering Ltd.
Number C1334
Permission to Consult held by:

Discipline	SK. Reg. No.	Signature
STRUCTURAL	34196	

PROFESSIONAL ENGINEER
W. SONG
MEMBER 34196
2021 01 15
SASKATCHEWAN

MPE Engineering Ltd.

ENGLISH RIVER ENTERPRISES
PROPERTY MANAGEMENT LP

WASTEWATER TREATMENT PLANT
ARCHITECTURAL
BUILDING DETAILS

DESIGNED	W.W.L.S.	JOB	7603-002-00
DRAWN	D.F.F.	SCALE	AS SHOWN
DATE	NOVEMBER 2020	DRAWING	A5.1

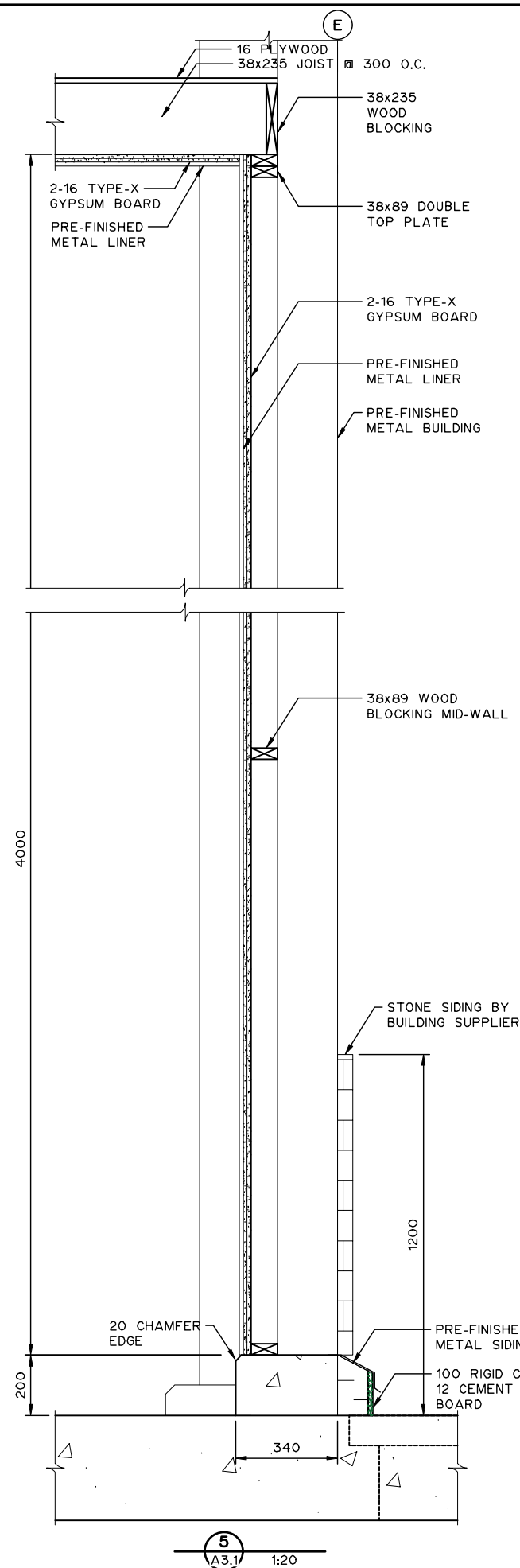

5 A3.1 1:20

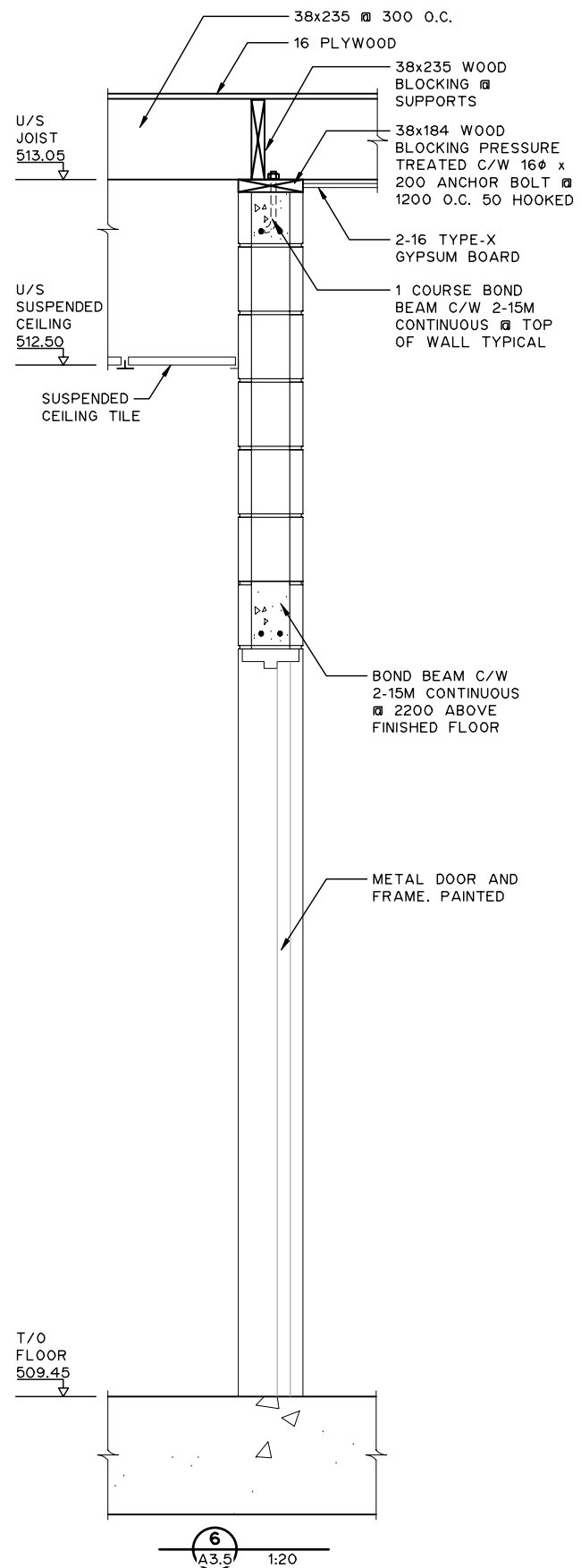

6 A3.5 1:20

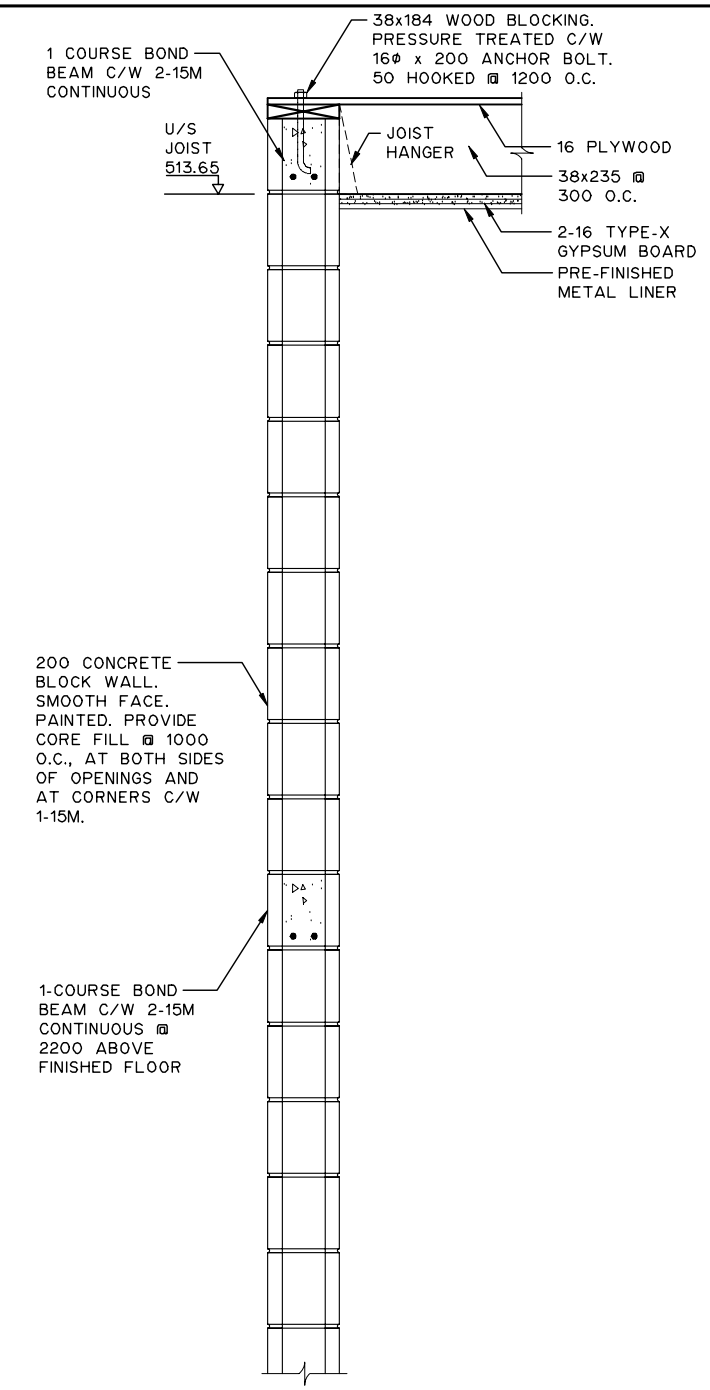

7 A3.1 1:20

NOTES:

1. ALL DIMENSIONS ARE IN MILLIMETRES AND ELEVATIONS ARE IN METRES UNLESS NOTED OTHERWISE.

THIS DRAWING MAY HAVE BEEN MODIFIED FROM ITS ORIGINAL SIZE. ALL SCALE NOTATIONS INDICATED ARE BASED ON 11"x17" FORMAT DRAWINGS

ISSUE	YY-MM-DD	REVISION
2	21-01-15	FOR CONSTRUCTION
1	20-10-15	FOR TENDER

Association of Professional Engineers & Geoscientists of Saskatchewan
CERTIFICATE OF AUTHORIZATION
MPE Engineering Ltd.
Number C1334
Permission to Consult held by:

Discipline	Sk. Reg. No.	Signature
STRUCTURAL	34196	

PROFESSIONAL ENGINEER W. SONG MEMBER 34196 2021 01 15 YR. MO. DAY SASKATCHEWAN

MPE Engineering Ltd.

ENGLISH RIVER ENTERPRISES PROPERTY MANAGEMENT LP

WASTEWATER TREATMENT PLANT
ARCHITECTURAL
BUILDING DETAILS

DESIGNED	W.W.L.S.	JOB	7603-002-00
DRAWN	D.F.F.	SCALE	AS SHOWN
DATE	NOVEMBER 2020	DRAWING	A5.2

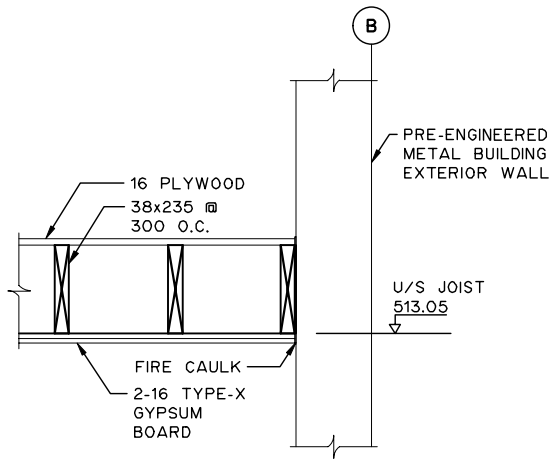

8 A3.2 1:20

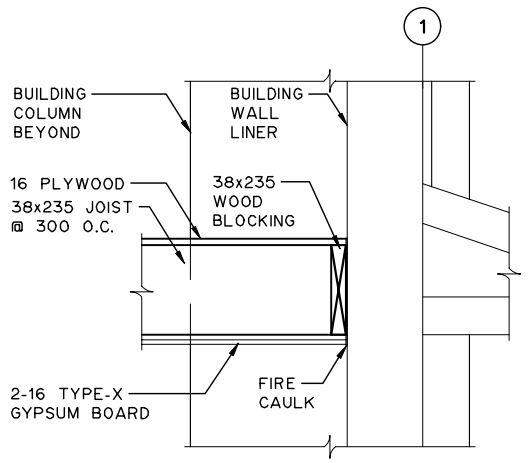

9 A3.5 1:20

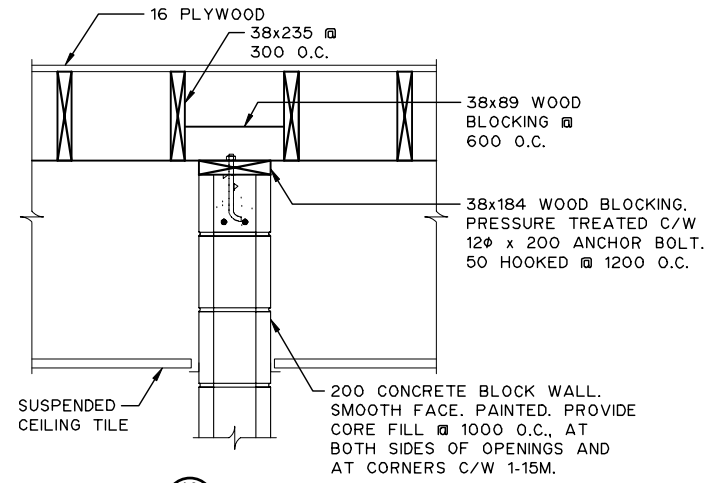

10 A3.8 1:20

NOTES:

1. ALL DIMENSIONS ARE IN MILLIMETRES AND ELEVATIONS ARE IN METRES UNLESS NOTED OTHERWISE.

THIS DRAWING MAY HAVE BEEN MODIFIED FROM ITS ORIGINAL SIZE. ALL SCALE NOTATIONS INDICATED ARE BASED ON 11"x17" FORMAT DRAWINGS

ISSUE	YY-MM-DD	REVISION
2	21-01-15	FOR CONSTRUCTION
1	20-10-15	FOR TENDER

Association of Professional Engineers & Geoscientists of Saskatchewan
CERTIFICATE OF AUTHORIZATION
MPE Engineering Ltd.
Number C1334
Permission to Consult held by:

Discipline	Sk. Reg. No.	Signature
STRUCTURAL	34196	

PROFESSIONAL ENGINEER W. SONG MEMBER 34196 2021 01 15 SASKATCHEWAN

MPE Engineering Ltd.

ENGLISH RIVER ENTERPRISES PROPERTY MANAGEMENT LP

WASTEWATER TREATMENT PLANT
ARCHITECTURAL
BUILDING DETAILS

DESIGNED	W.W.L.S.	JOB	7603-002-00
DRAWN	D.F.F.	SCALE	AS SHOWN
DATE	NOVEMBER 2020	DRAWING	A5.3

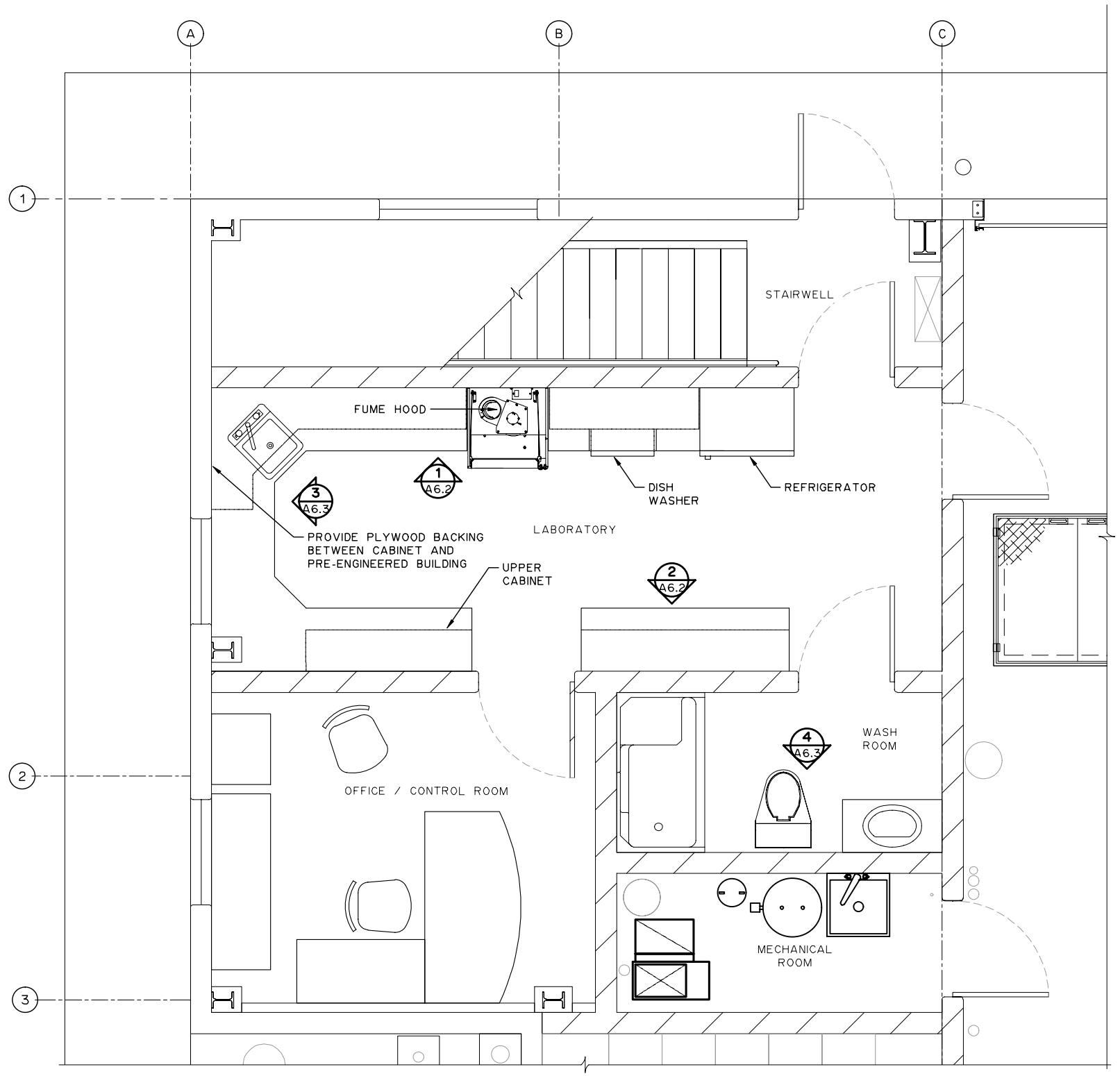

NOTES:

1. ALL DIMENSIONS ARE IN MILLIMETRES AND ELEVATIONS ARE IN METRES UNLESS NOTED OTHERWISE.
2. SEE DRAWING A6.3 FOR TYPICAL MILLWORK SECTION. COORDINATE LOCATION AND TYPE OF ALL ELECTRICAL COMPONENTS WITH ELECTRICAL. OUTLETS AND DATAPORTS SHOWN ON THIS DRAWING ARE A SCHEMATIC REPRESENTATION ONLY
3. ALL LAB EQUIPMENT AND APPLIANCES SHOWN IN THE DRAWINGS TO BE SUPPLIED BY THE CONTRACTOR. SEE SPECIFICATION SECTION 10650 AND 10951.
4. OFFICE FURNITURE SHOWN IS FOR INFORMATION ONLY. OFFICE FURNITURE IS NOT PART OF THIS CONTRACT.

THIS DRAWING MAY HAVE BEEN MODIFIED FROM ITS ORIGINAL SIZE. ALL SCALE NOTATIONS INDICATED ARE BASED ON 11"x17" FORMAT DRAWINGS

ISSUE	YY-MM-DD	REVISION
2	21-01-15	FOR CONSTRUCTION
1	20-10-15	FOR TENDER

Association of Professional Engineers & Geoscientists of Saskatchewan
CERTIFICATE OF AUTHORIZATION
MPE Engineering Ltd.
Number C1334
Permission to Consult held by:

Discipline	Sk. Reg. No.	Signature
STRUCTURAL	34196	

PROFESSIONAL ENGINEER
W. SONG
MEMBER 34196
2021 01 15
YR MO DAY
SASKATCHEWAN

MPE Engineering Ltd.

ENGLISH RIVER ENTERPRISES PROPERTY MANAGEMENT LP

WASTEWATER TREATMENT PLANT
ARCHITECTURAL
MILLWORK LAYOUT PLAN

DESIGNED	W.W.L.S.	JOB	7603-002-00
DRAWN	D.F.F.	SCALE	1:50
DATE	NOVEMBER 2020	DRAWING	A6.1

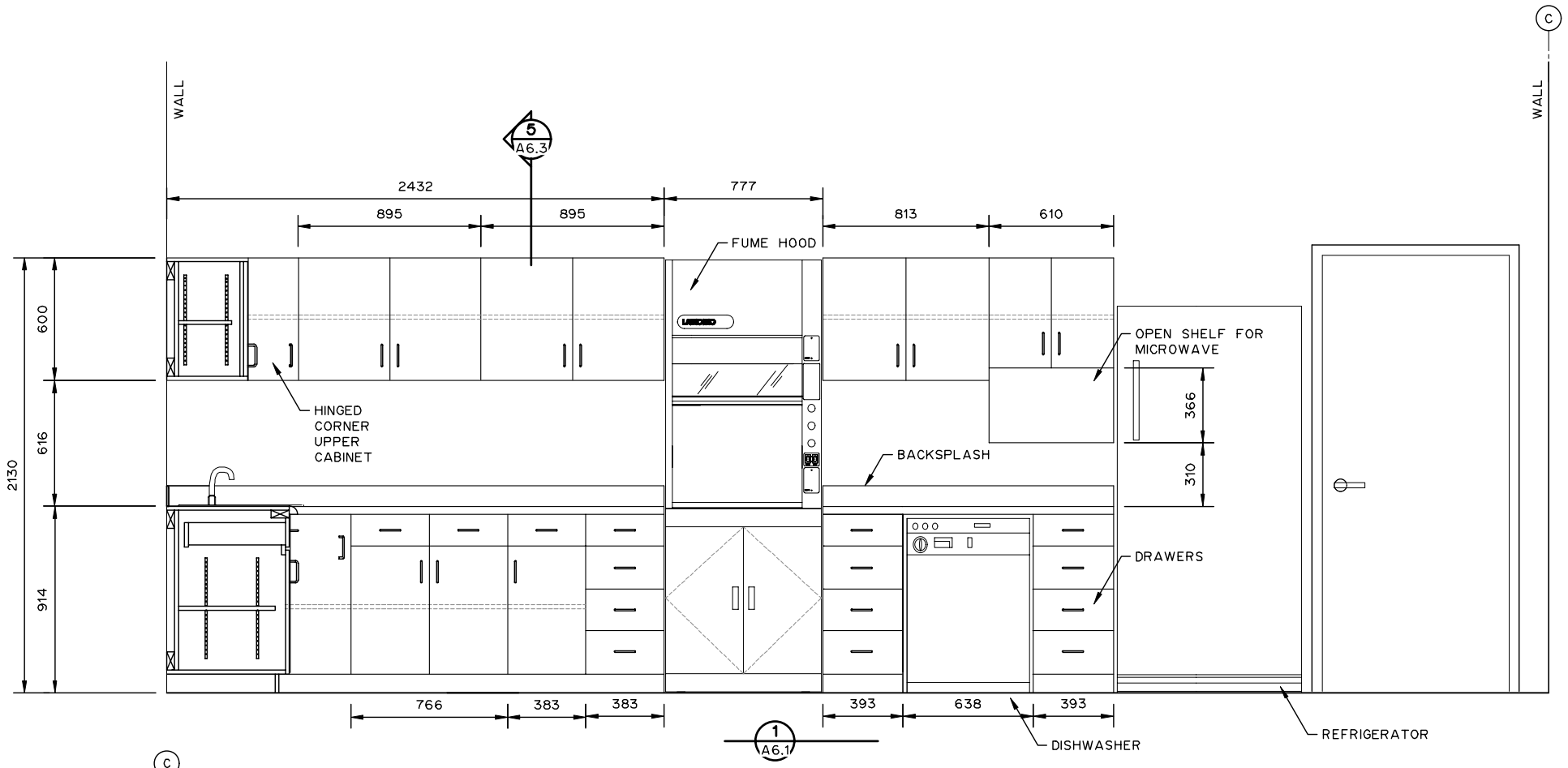

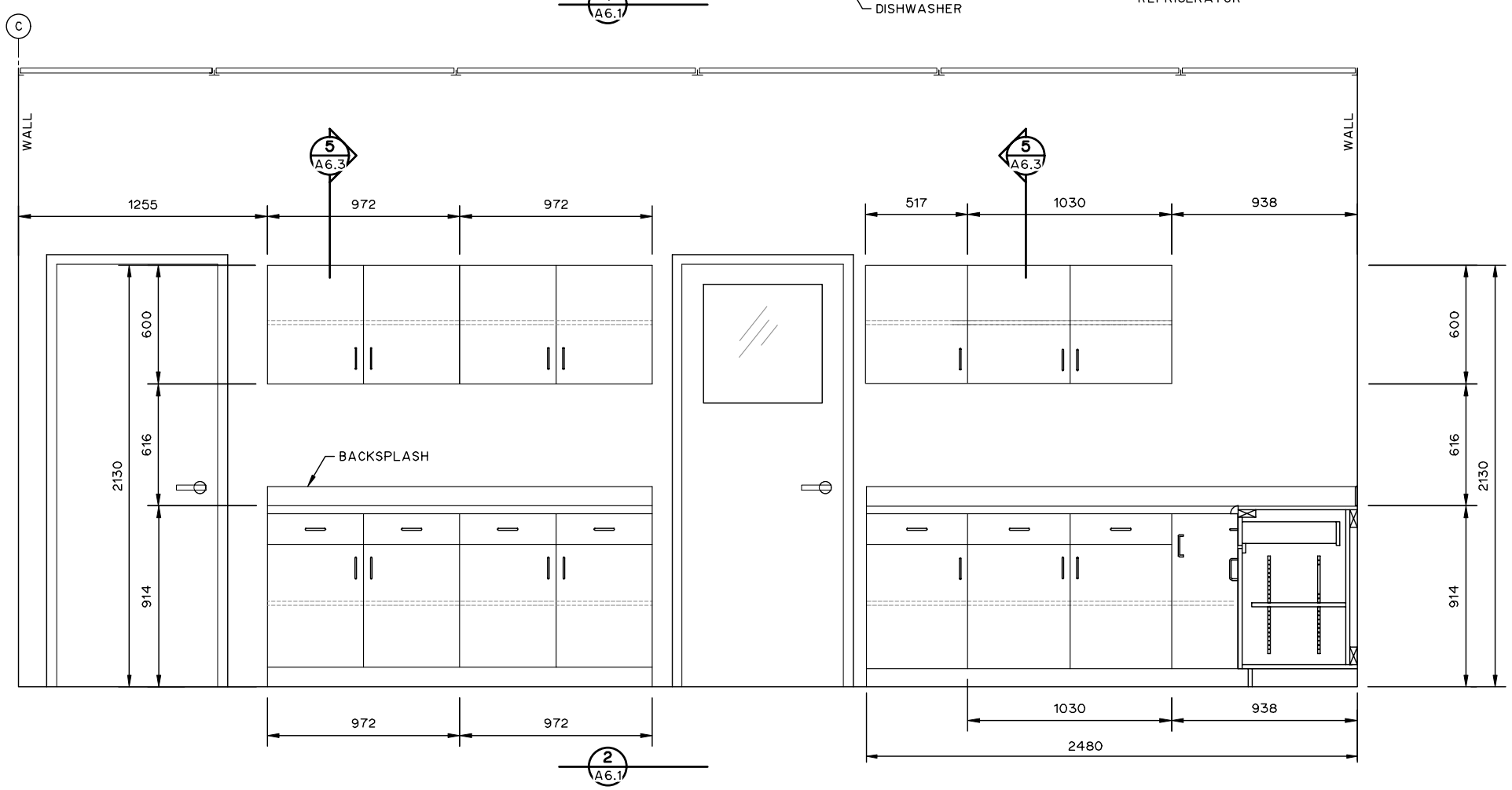

NOTES:

1. ALL DIMENSIONS ARE IN MILLIMETRES AND ELEVATIONS ARE IN METRES UNLESS NOTED OTHERWISE.
2. SEE DRAWING A6.3 FOR TYPICAL MILLWORK SECTION. COORDINATE LOCATION AND TYPE OF ALL ELECTRICAL COMPONENTS WITH ELECTRICAL. OUTLETS AND DATAPORTS SHOWN ON THIS DRAWING ARE A SCHEMATIC REPRESENTATION ONLY
3. ALL LAB EQUIPMENT AND APPLIANCES SHOWN IN THE DRAWINGS TO BE SUPPLIED BY THE CONTRACTOR. SEE SPECIFICATION SECTION 10650 AND 10951.
4. OFFICE FURNITURE SHOWN IS FOR INFORMATION ONLY. OFFICE FURNITURE IS NOT PART OF THIS CONTRACT.

THIS DRAWING MAY HAVE BEEN MODIFIED FROM ITS ORIGINAL SIZE. ALL SCALE NOTATIONS INDICATED ARE BASED ON 11"x17" FORMAT DRAWINGS

ISSUE	YY-MM-DD	REVISION
2	21-01-15	FOR CONSTRUCTION
1	20-10-15	FOR TENDER

Association of Professional Engineers & Geoscientists of Saskatchewan
CERTIFICATE OF AUTHORIZATION
MPE Engineering Ltd.
Number C1334
Permission to Consult held by:

Discipline	Sk. Reg. No.	Signature
STRUCTURAL	34196	

PROFESSIONAL ENGINEER W. SONG MEMBER 34196 2021 01 15 YR MO DAY SASKATCHEWAN

MPE Engineering Ltd.

ENGLISH RIVER ENTERPRISES PROPERTY MANAGEMENT LP

WASTEWATER TREATMENT PLANT
ARCHITECTURAL
MILLWORK ELEVATIONS

DESIGNED	W.W.L.S.	JOB	7603-002-00
DRAWN	D.F.F.	SCALE	1:30
DATE	NOVEMBER 2020	DRAWING	A6.2

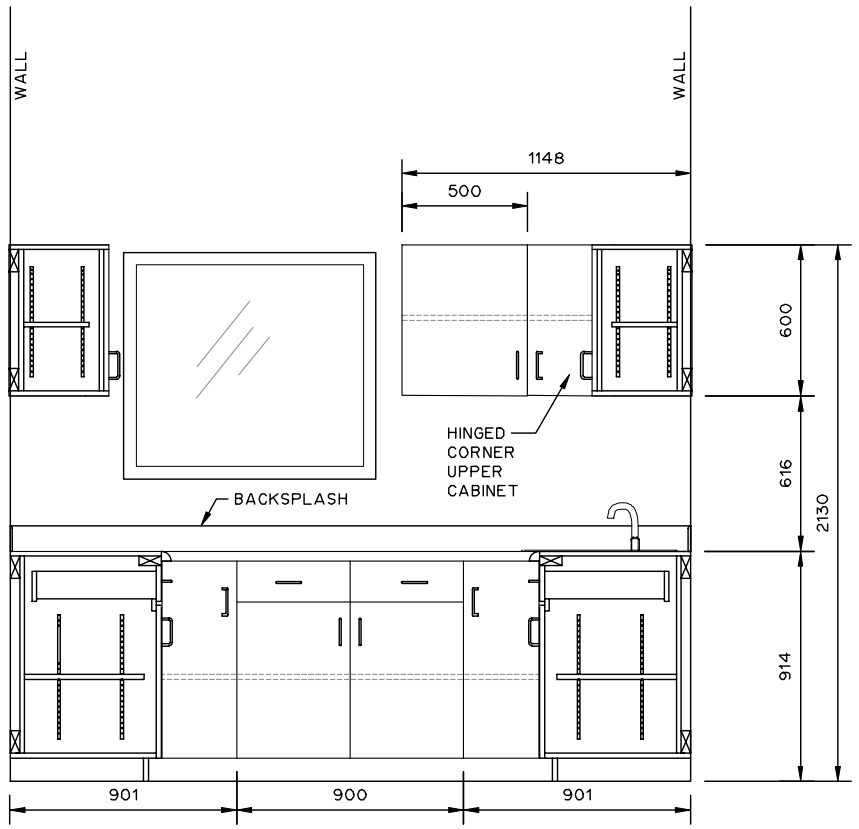

3 A6.1

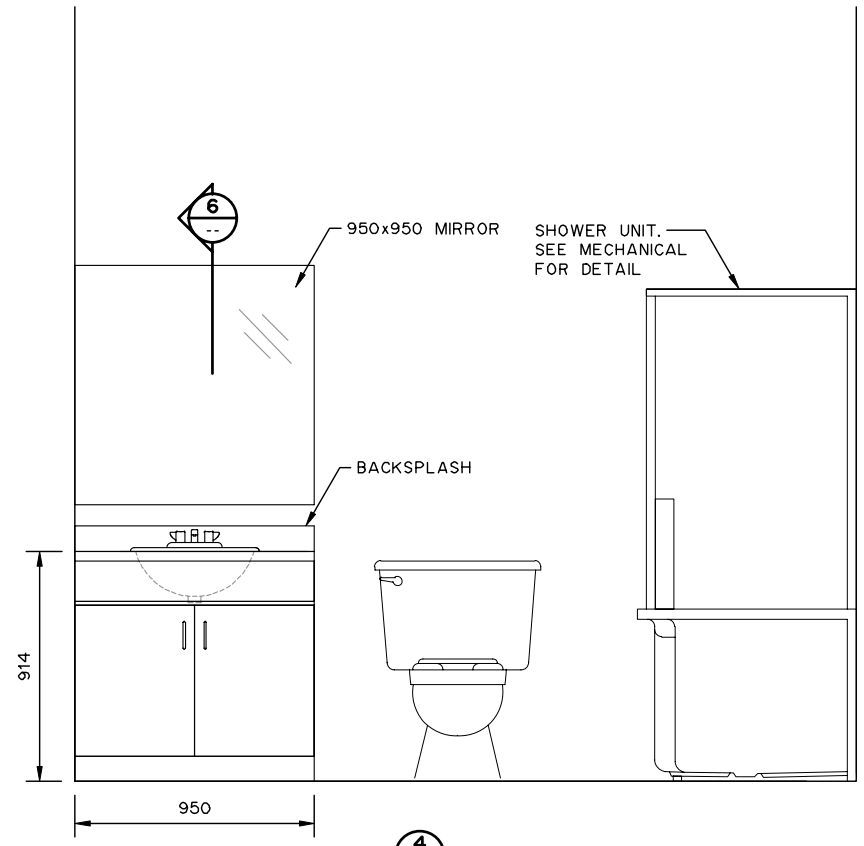

4 A6.1

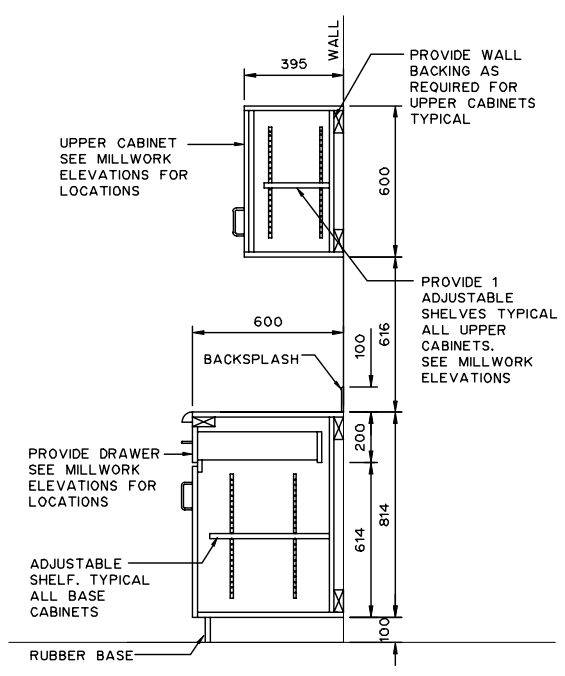

5 A6.2 1:25

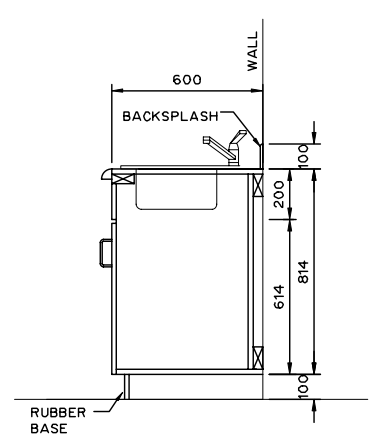

6 -- 1:25

NOTES:

1. ALL DIMENSIONS ARE IN MILLIMETRES AND ELEVATIONS ARE IN METRES UNLESS NOTED OTHERWISE.
2. SEE DRAWING A6.3 FOR TYPICAL MILLWORK SECTION. COORDINATE LOCATION AND TYPE OF ALL ELECTRICAL COMPONENTS WITH ELECTRICAL. OUTLETS AND DATAPORTS SHOWN ON THIS DRAWING ARE A SCHEMATIC REPRESENTATION ONLY
3. ALL LAB EQUIPMENT AND APPLIANCES SHOWN IN THE DRAWINGS TO BE SUPPLIED BY THE CONTRACTOR. SEE SPECIFICATION SECTION 10650 AND 10951.
4. OFFICE FURNITURE SHOWN IS FOR INFORMATION ONLY. OFFICE FURNITURE IS NOT PART OF THIS CONTRACT.
5. SEE SPECIFICATION 10811 FOR WASHROOM ACCESSORIES.

THIS DRAWING MAY HAVE BEEN MODIFIED FROM ITS ORIGINAL SIZE. ALL SCALE NOTATIONS INDICATED ARE BASED ON 11"x17" FORMAT DRAWINGS

ISSUE	YY-MM-DD	REVISION
2	21-01-15	FOR CONSTRUCTION
1	20-10-15	FOR TENDER

Association of Professional Engineers & Geoscientists of Saskatchewan
CERTIFICATE OF AUTHORIZATION
MPE Engineering Ltd.
Number C1334
Permission to Consult held by:

Discipline	Sk. Reg. No.	Signature
STRUCTURAL	34196	

PROFESSIONAL ENGINEER W. SONG MEMBER 34196 2021 01 15 SASKATCHEWAN

MPE Engineering Ltd.

ENGLISH RIVER ENTERPRISES PROPERTY MANAGEMENT LP

WASTEWATER TREATMENT PLANT
ARCHITECTURAL
MILLWORK ELEVATIONS AND DETAILS

DESIGNED	W.W.L.S.	JOB	7603-002-00
DRAWN	D.F.F.	SCALE	1:30
DATE	NOVEMBER 2020	DRAWING	A6.3

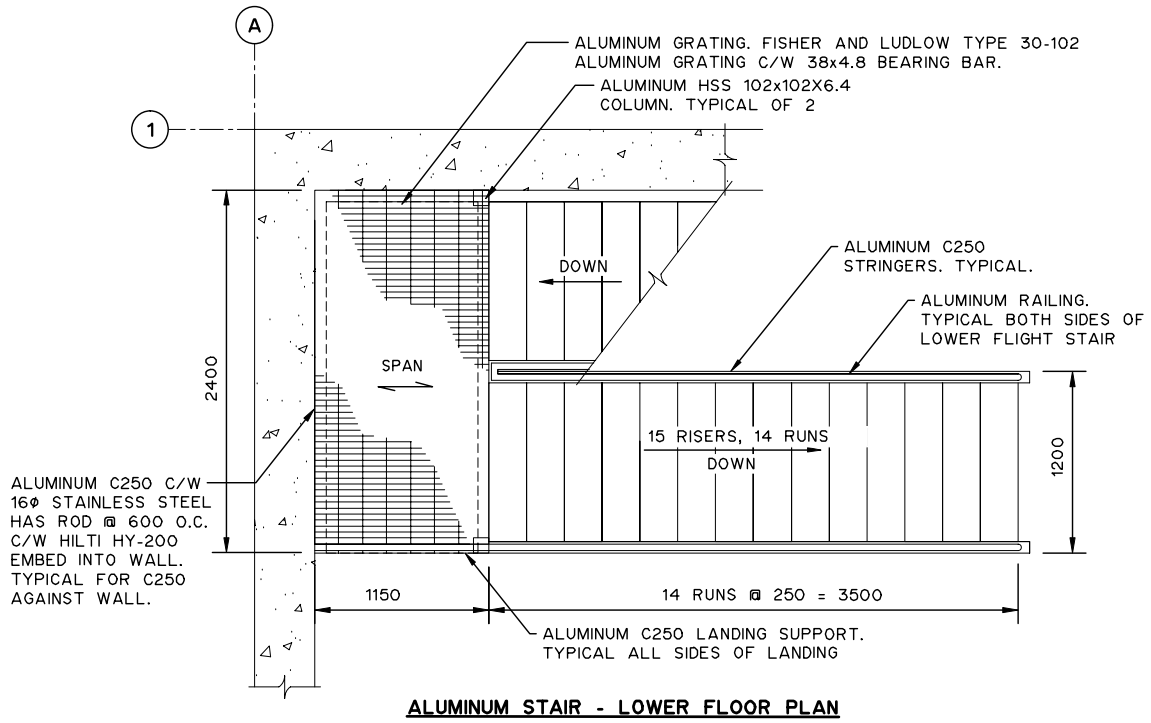

ALUMINUM STAIR - LOWER FLOOR PLAN
1:50

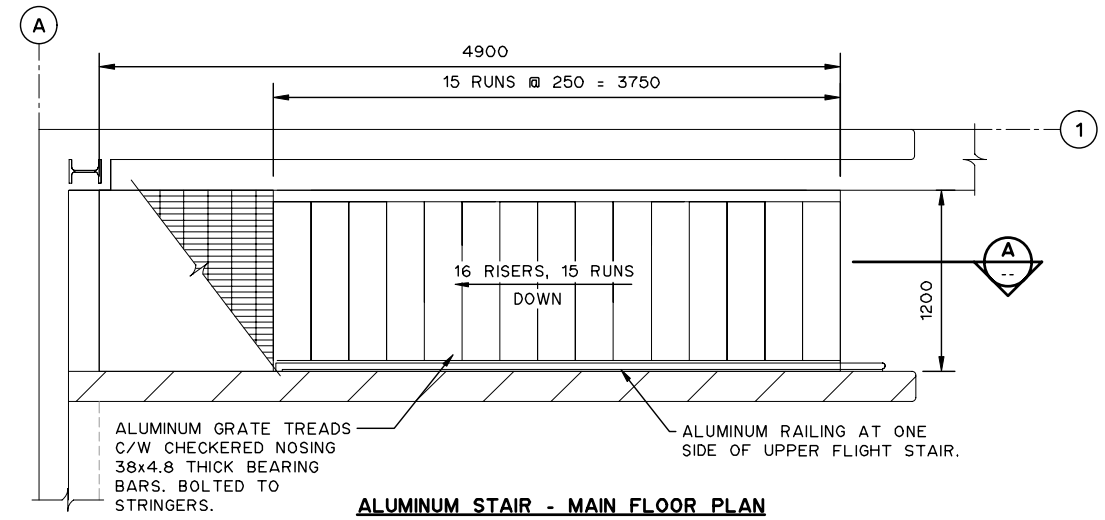

ALUMINUM STAIR - MAIN FLOOR PLAN
1:50

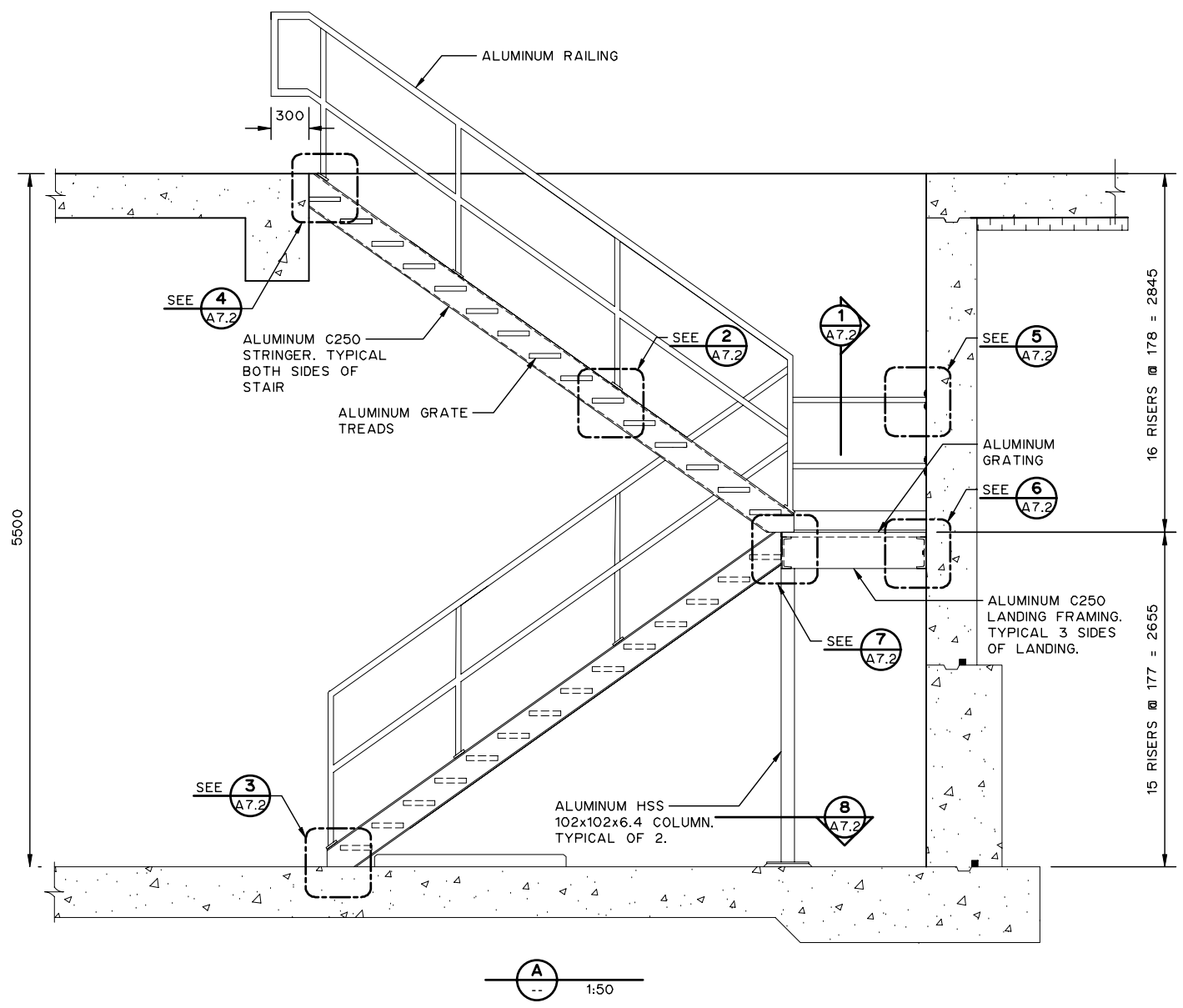

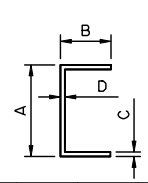

MEMBER	A	B	C	D
C250	254	73.4	11.1	13.4

ALUMINUM CHANNEL SCHEDULE

NOTES:

1. ALL DIMENSIONS ARE IN MILLIMETRES AND ELEVATIONS ARE IN METRES UNLESS NOTED OTHERWISE.
2. BITUMEN COATING IS REQUIRED FOR ALL ALUMINUM SURFACE AREAS THAT ARE IN CONTACT WITH CONCRETE.
3. ALL PLATFORM MEMBERS AND GRATING TO BE STRUCTURAL ALUMINUM ALLOY 6061-T6 UNLESS NOTED OTHERWISE.

THIS DRAWING MAY HAVE BEEN MODIFIED FROM ITS ORIGINAL SIZE. ALL SCALE NOTATIONS INDICATED ARE BASED ON 11"x17" FORMAT DRAWINGS

ISSUE	YY-MM-DD	REVISION
2	21-01-15	FOR CONSTRUCTION
1	20-10-15	FOR TENDER

Association of Professional Engineers & Geoscientists of Saskatchewan
CERTIFICATE OF AUTHORIZATION
MPE Engineering Ltd.
Number C1334
Permission to Consult held by:

Discipline	Sk. Reg. No.	Signature
STRUCTURAL	34196	

PROFESSIONAL ENGINEER W. SONG MEMBER 34196 2021 01 15 SASKATCHEWAN

MPE Engineering Ltd.

ENGLISH RIVER ENTERPRISES PROPERTY MANAGEMENT LP

WASTEWATER TREATMENT PLANT
ARCHITECTURAL
ALUMINUM STAIR PLANS AND SECTIONS

DESIGNED	W.W.L.S.	JOB	7603-002-00
DRAWN	D.F.F.	SCALE	AS SHOWN
DATE	NOVEMBER 2020	DRAWING	A7.1

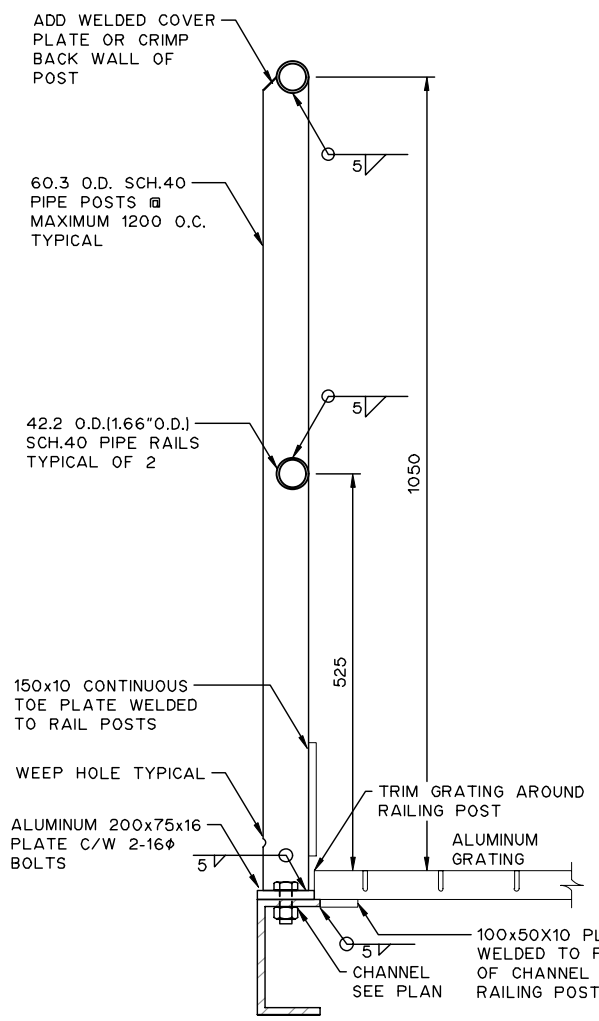

1 A7.1 TYPICAL HANDRAIL DETAIL
N.T.S.

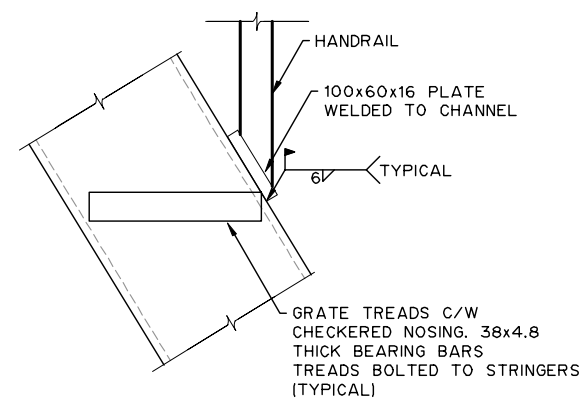

2 A7.1 TYPICAL HANDRAIL TO STRINGER CONNECTION
N.T.S.

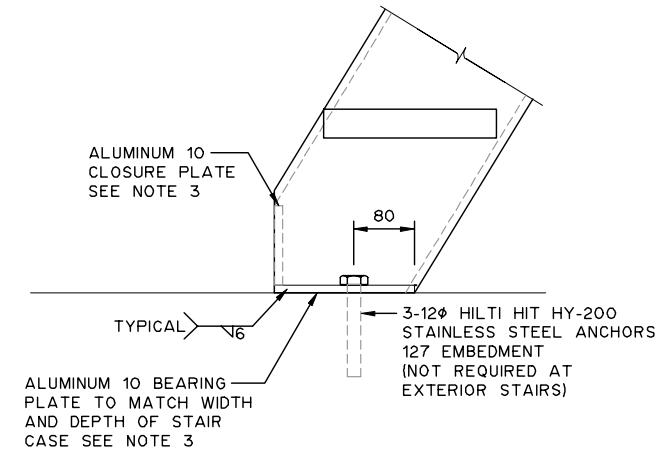

3 A7.1 TYPICAL BEARING PLATE CONNECTION
N.T.S.

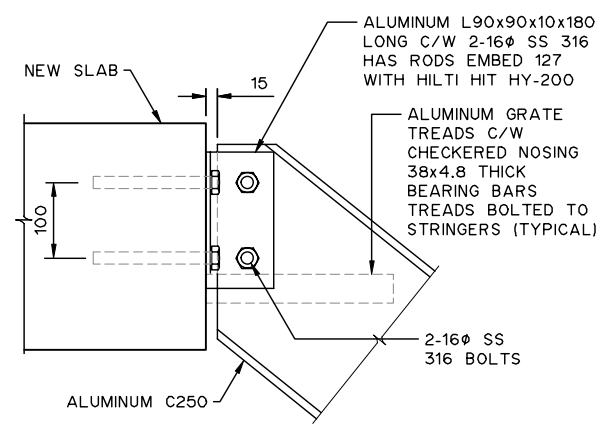

4 A7.1 TYPICAL STRINGER TO CONCRETE CONNECTION
N.T.S.

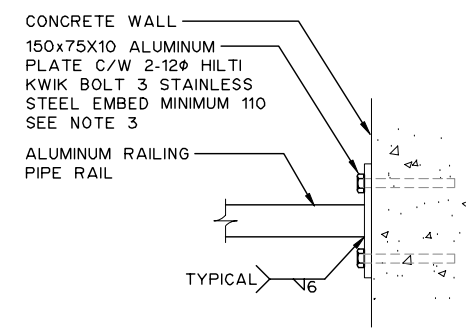

5 A7.1 RAILING PIPE TO CONCRETE WALL DETAIL
N.T.S.

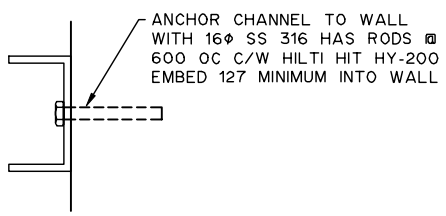

6 A7.1 TYPICAL LANDING CHANNEL TO WALL CONNECTION
N.T.S.

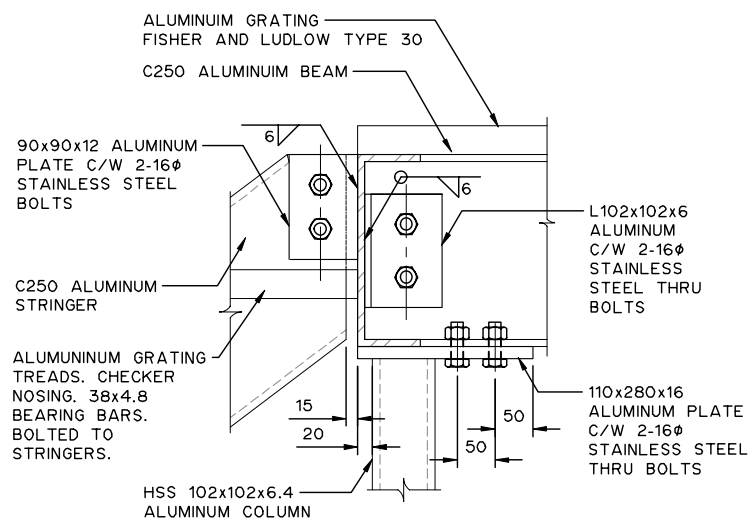

7 A7.1 N.T.S.

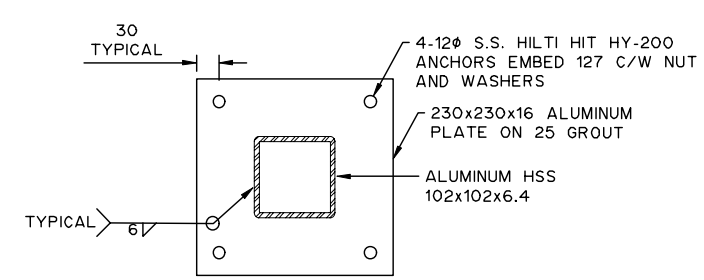

8 A7.1 TYPICAL 102x102 HSS COLUMN BASE PLATE
N.T.S.

NOTES:

1. ALL DIMENSIONS ARE IN MILLIMETRES AND ELEVATIONS ARE IN METRES UNLESS NOTED OTHERWISE.
2. ALL BOLD ITEMS INDICATE WORK TO BE DONE, AND ALL LIGHT ITEMS INDICATE EXISTING CONDITIONS.
3. BITUMEN COATING IS REQUIRED FOR ALL ALUMINUM SURFACE AREAS THAT ARE IN CONTACT WITH CONCRETE.
4. ALL INTERIOR MEMBERS TO BE STRUCTURAL ALUMINUM ALLOY 6061-T6 UNLESS NOTED OTHERWISE.

THIS DRAWING MAY HAVE BEEN MODIFIED FROM ITS ORIGINAL SIZE. ALL SCALE NOTATIONS INDICATED ARE BASED ON 11"x17" FORMAT DRAWINGS

ISSUE	YY-MM-DD	REVISION
2	21-01-15	FOR CONSTRUCTION
1	20-10-15	FOR TENDER

Association of Professional Engineers & Geoscientists of Saskatchewan
CERTIFICATE OF AUTHORIZATION
MPE Engineering Ltd.
Number C1334
Permission to Consult held by:

Discipline	Sk. Reg. No.	Signature
STRUCTURAL	34196	

PROFESSIONAL ENGINEER W. SONG MEMBER 34196 2021 01 15 SASKATCHEWAN

MPE Engineering Ltd.

ENGLISH RIVER ENTERPRISES PROPERTY MANAGEMENT LP

WASTEWATER TREATMENT PLANT
ARCHITECTURAL
ALUMINUM STAIR DETAILS

DESIGNED	W.W.L.S.	JOB	7603-002-00
DRAWN	D.F.F.	SCALE	AS SHOWN
DATE	NOVEMBER 2020	DRAWING	A7.2

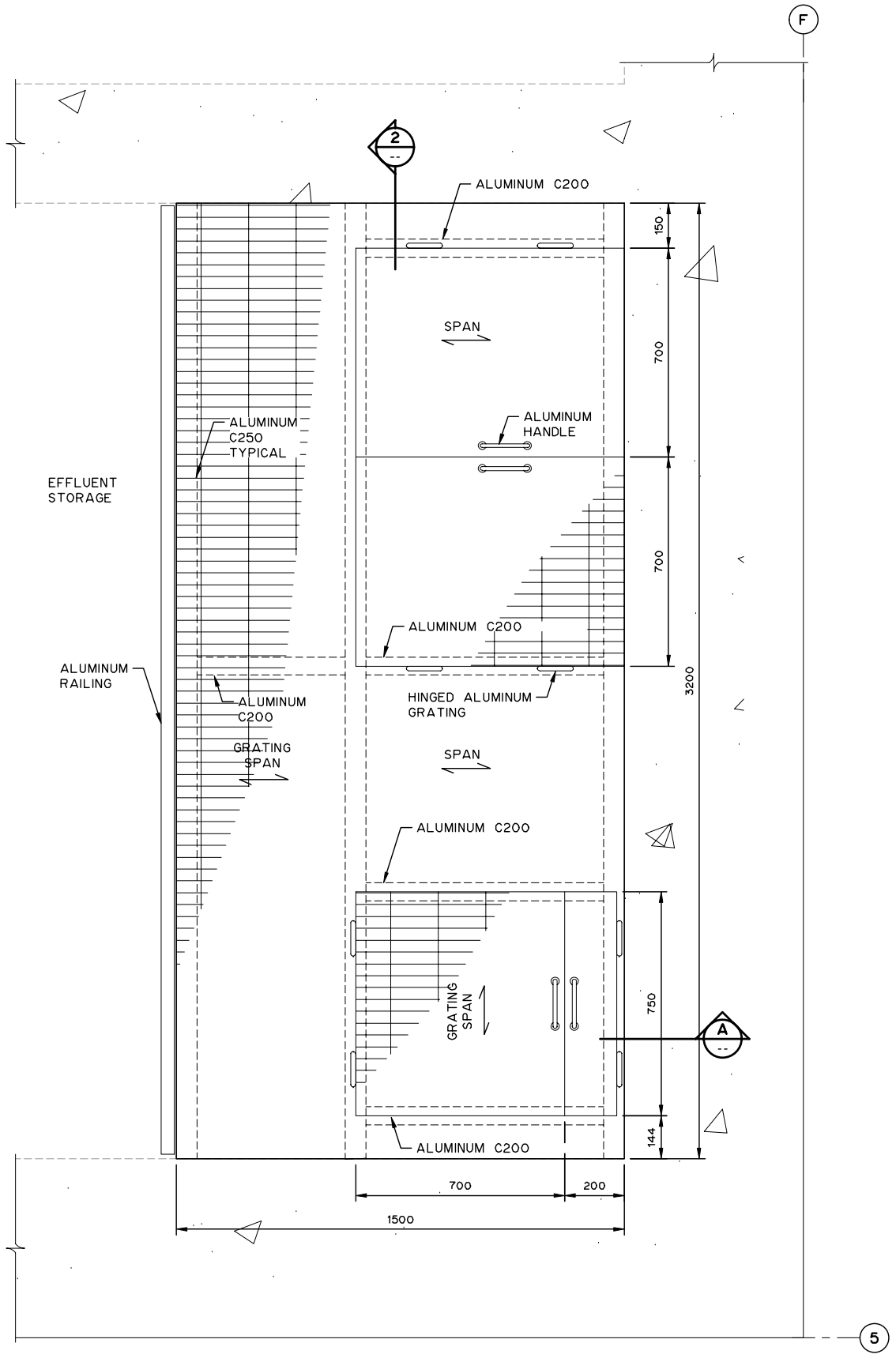

EFFLUENT STORAGE INTERMEDIATE PLATFORM PLAN
1:20

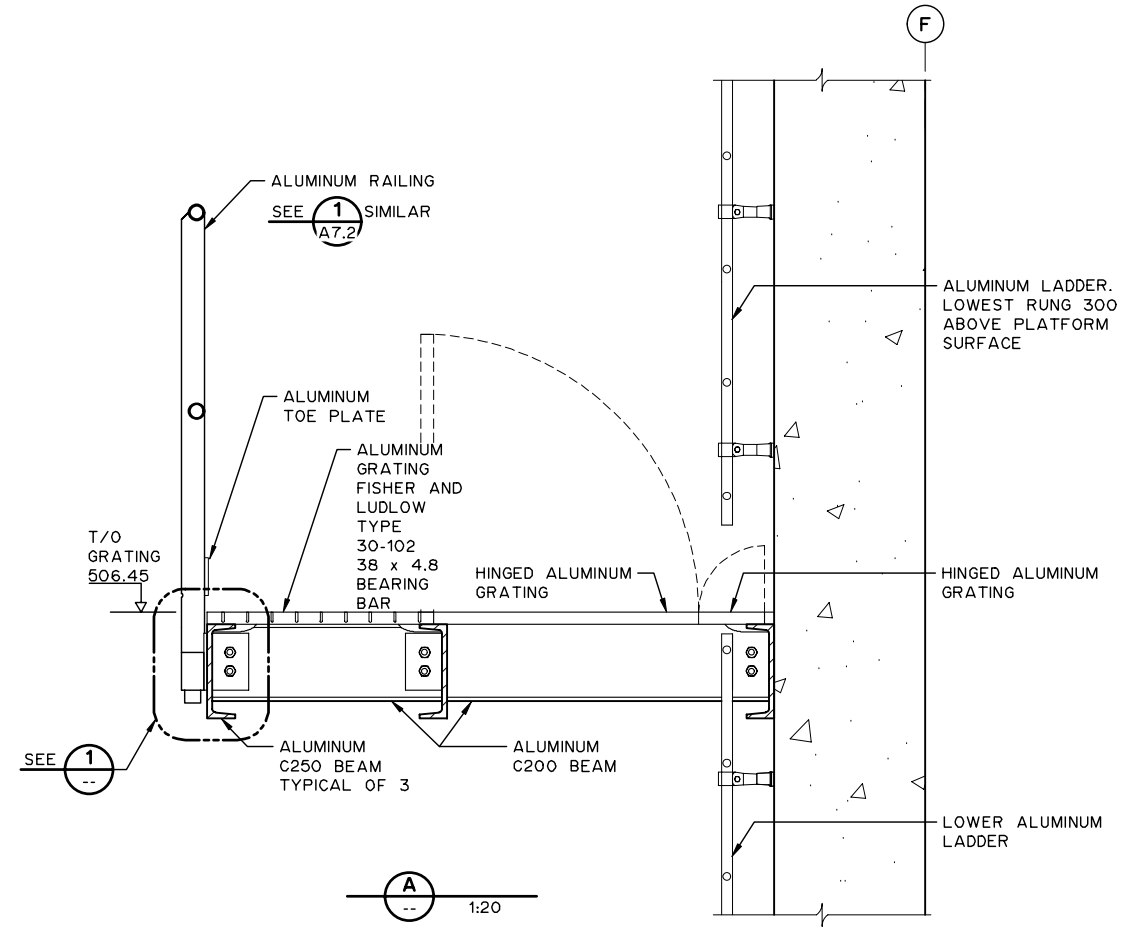

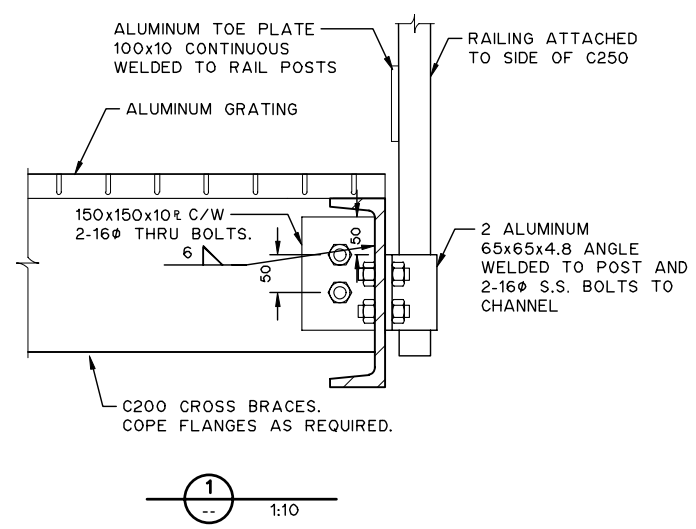

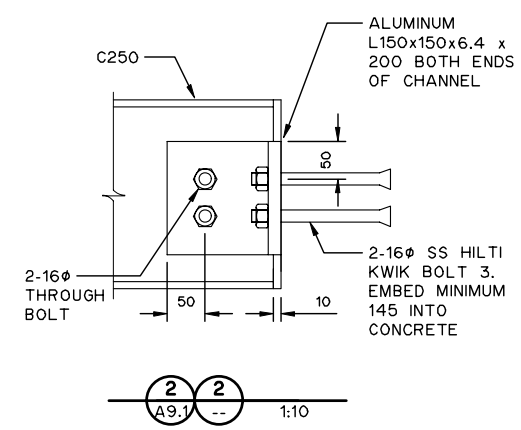

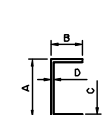

MEMBER	A	B	C	D
C200	203	76	9	5
C250	254	73.4	11.1	13.4

ALUMINUM CHANNEL SCHEDULE

NOTES:

1. ALL DIMENSIONS ARE IN MILLIMETRES AND ELEVATIONS ARE IN METRES UNLESS NOTED OTHERWISE.
2. BITUMEN COATING IS REQUIRED FOR ALL ALUMINUM SURFACE AREAS THAT ARE IN CONTACT WITH CONCRETE.

THIS DRAWING MAY HAVE BEEN MODIFIED FROM ITS ORIGINAL SIZE. ALL SCALE NOTATIONS INDICATED ARE BASED ON 11"x17" FORMAT DRAWINGS

ISSUE	YY-MM-DD	REVISION
2	21-01-15	FOR CONSTRUCTION
1	20-10-15	FOR TENDER

Association of Professional Engineers & Geoscientists of Saskatchewan
CERTIFICATE OF AUTHORIZATION
MPE Engineering Ltd.
Number C1334
Permission to Consult held by:

Discipline	Sk. Reg. No.	Signature
STRUCTURAL	34196	

PROFESSIONAL ENGINEER W. BONG MEMBER 34196 2021 01 15 SASKATCHEWAN

MPE Engineering Ltd.

ENGLISH RIVER ENTERPRISES PROPERTY MANAGEMENT LP

WASTEWATER TREATMENT PLANT
ARCHITECTURAL
ALUMINUM PLATFORM

DESIGNED	W.W.L.S.	JOB	7603-002-00
DRAWN	D.F.F.	SCALE	AS SHOWN
DATE	NOVEMBER 2020	DRAWING	A8.1

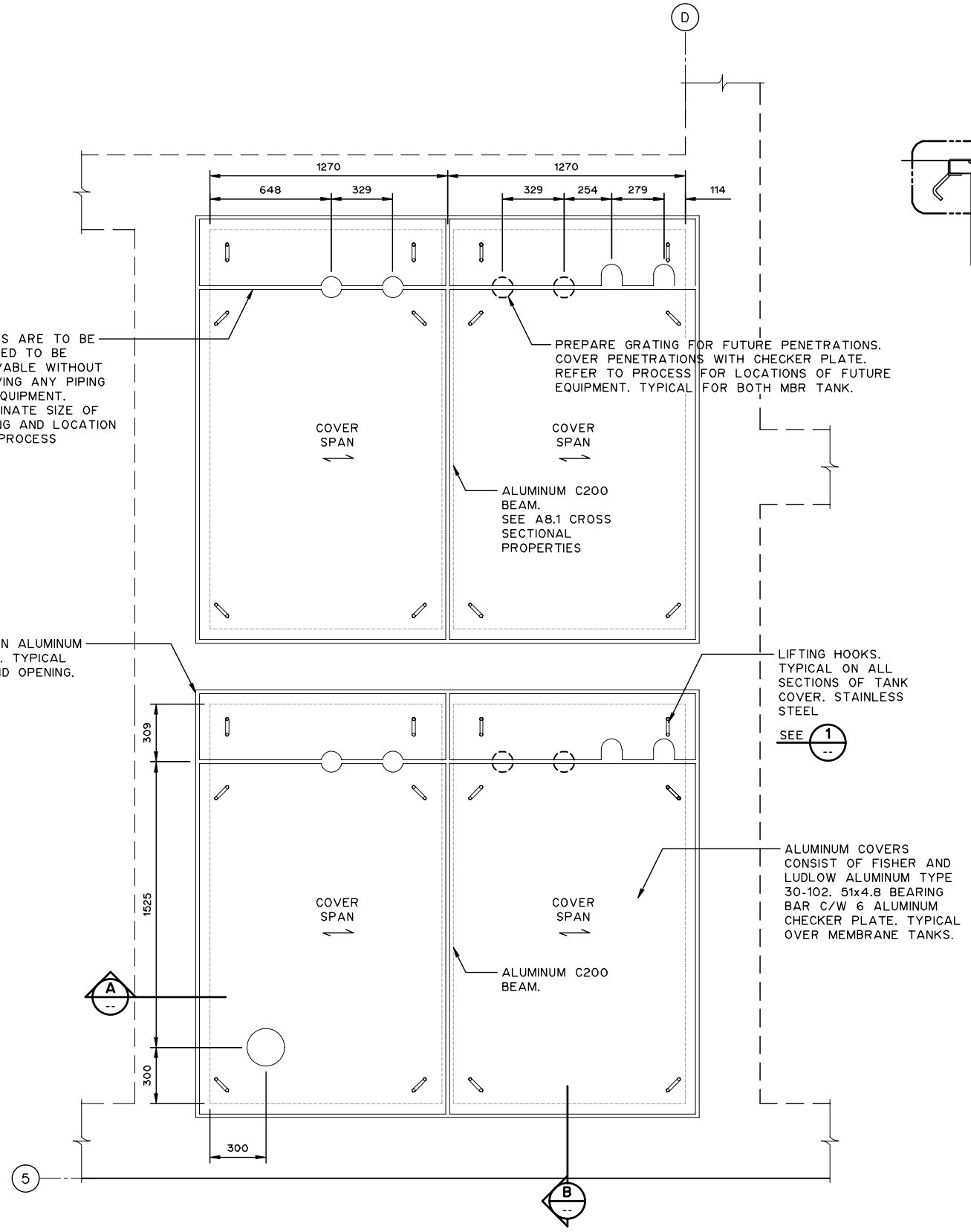

MBR TANK ALUMINUM COVER PLAN
1:30

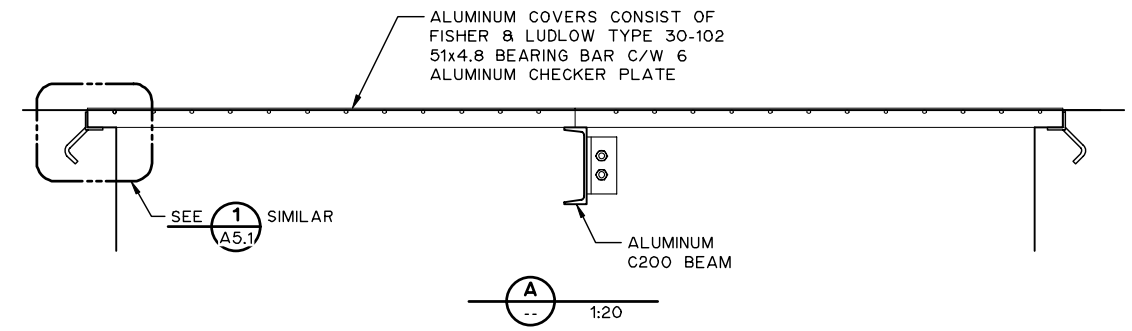

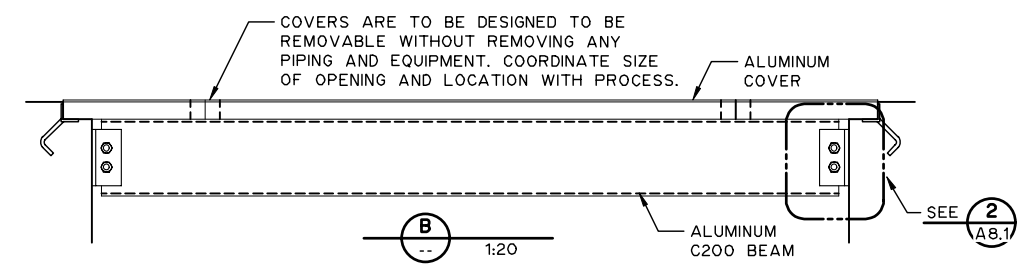

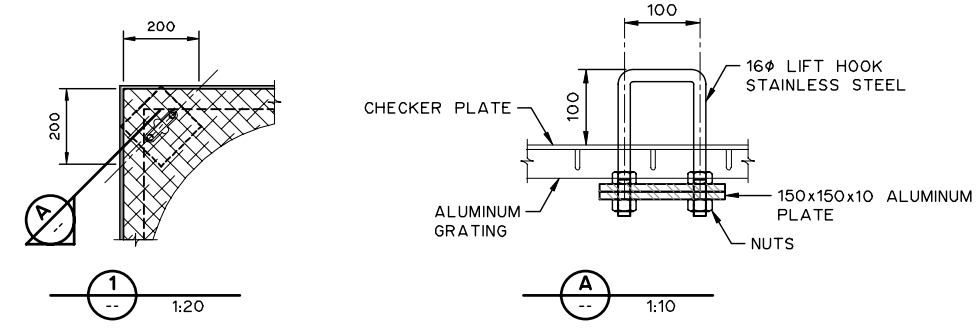

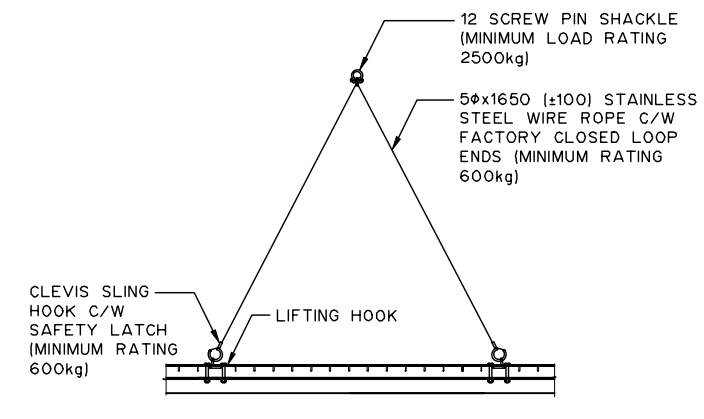

TYPICAL RIGGING DETAIL
N.T.S.

NOTES:

1. ALL DIMENSIONS ARE IN MILLIMETRES AND ELEVATIONS ARE IN METRES UNLESS NOTED OTHERWISE.
2. BITUMEN COATING IS REQUIRED FOR ALL ALUMINUM SURFACE AREAS THAT ARE IN CONTACT WITH CONCRETE.
3. STRUCTURAL ALUMINUM ALLOY 6061-T6 TYPICAL.
4. COORDINATE SIZE AND LOCATION OF OPENINGS THROUGH SLAB AND GRATING WITH MECHANICAL AND PROCESS PLANS.
5. CONTRACTOR TO ENSURE TANK LIDS DO NOT HAVE A GAP GREATER THAN 6mm ANYWHERE.
6. CONTRACTOR TO INSTALL GRATING PRIOR TO EQUIPMENT INSTALL TO ENSURE SAFETY.

THIS DRAWING MAY HAVE BEEN MODIFIED FROM ITS ORIGINAL SIZE. ALL SCALE NOTATIONS INDICATED ARE BASED ON 11"x17" FORMAT DRAWINGS

ISSUE	YY-MM-DD	REVISION
2	21-01-15	FOR CONSTRUCTION
1	20-10-15	FOR TENDER

Association of Professional Engineers & Geoscientists of Saskatchewan
CERTIFICATE OF AUTHORIZATION
MPE Engineering Ltd.
Number C1334
Permission to Consult held by:

Discipline	Sk. Reg. No.	Signature
STRUCTURAL	34196	

PROFESSIONAL ENGINEER W. SONG MEMBER 34196 2021 01 15 YR. MO. DAY SASKATCHEWAN

MPE Engineering Ltd.

ENGLISH RIVER ENTERPRISES PROPERTY MANAGEMENT LP

WASTEWATER TREATMENT PLANT
ARCHITECTURAL
MBR TANK
COVER PLAN, SECTIONS AND DETAILS

DESIGNED	W.W.L.S.	JOB	7603-002-00
DRAWN	D.F.F.	SCALE	AS SHOWN
DATE	NOVEMBER 2020	DRAWING	A9.1

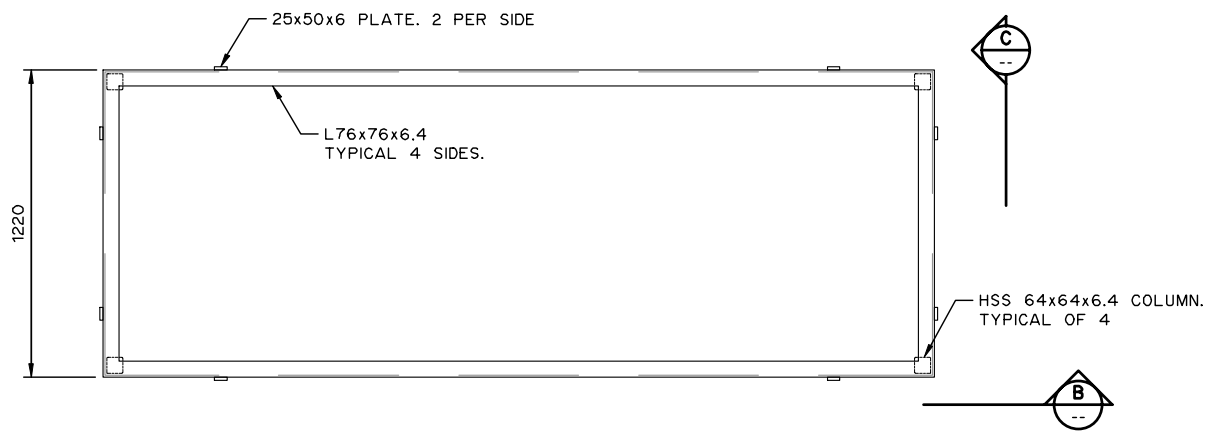

MUA SUPPORT FRAME PLAN
1:30

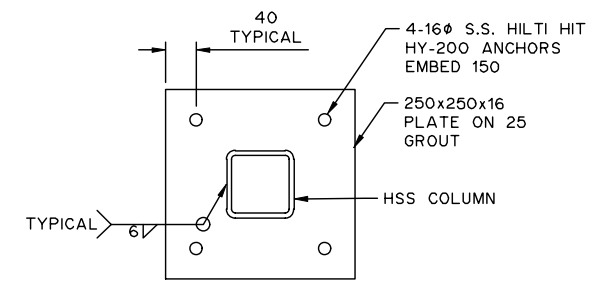

TYPICAL COLUMN BEARING PLATE DETAIL
1:10

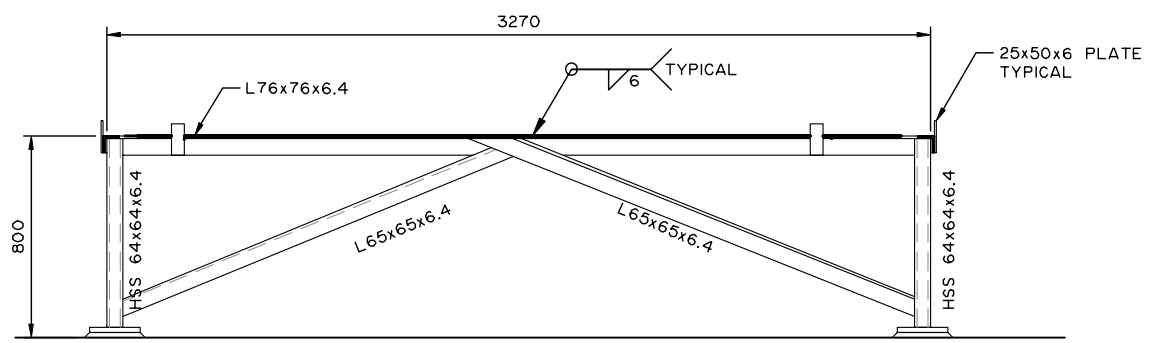

1:50

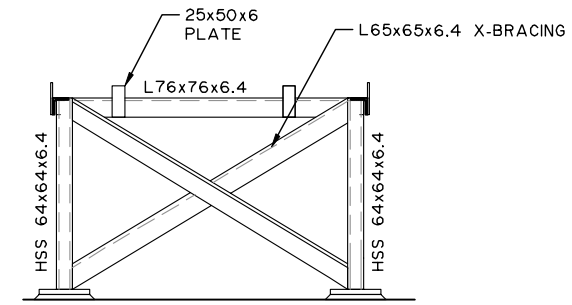

1:50

NOTES:

1. ALL DIMENSIONS ARE IN MILLIMETRES AND ELEVATIONS ARE IN METRES UNLESS NOTED OTHERWISE.
2. MUA SUPPORT FRAME TO BE CONSTRUCTED WITH GALVANIZED STEEL UNLESS NOTED OTHERWISE.
3. COORDINATE WITH MAKE-UP AIR UNIT SUPPLIER FOR SIZE OF UNIT. NOTIFY ENGINEER IMMEDIATELY IF ANY DISCREPANCIES ARE NOTED.

THIS DRAWING MAY HAVE BEEN MODIFIED FROM ITS ORIGINAL SIZE. ALL SCALE NOTATIONS INDICATED ARE BASED ON 11"x17" FORMAT DRAWINGS

ISSUE	YY-MM-DD	REVISION
2	21-01-15	FOR CONSTRUCTION
1	20-10-15	FOR TENDER

Association of Professional Engineers & Geoscientists of Saskatchewan
CERTIFICATE OF AUTHORIZATION
MPE Engineering Ltd.
Number C1334
Permission to Consult held by:

Discipline	Sk. Reg. No.	Signature
STRUCTURAL	34196	

PROFESSIONAL ENGINEER
W. SONG
MEMBER 34196
2021 01 15
YR. MO. DAY
SASKATCHEWAN

MPE Engineering Ltd.

ENGLISH RIVER ENTERPRISES
PROPERTY MANAGEMENT LP

WASTEWATER TREATMENT PLANT
STRUCTURAL
MUA SUPPORT FRAME

DESIGNED	W.W.L.S.	JOB	7603-002-00
DRAWN	D.F.F.	SCALE	AS SHOWN
DATE	NOVEMBER 2020	DRAWING	A10.1

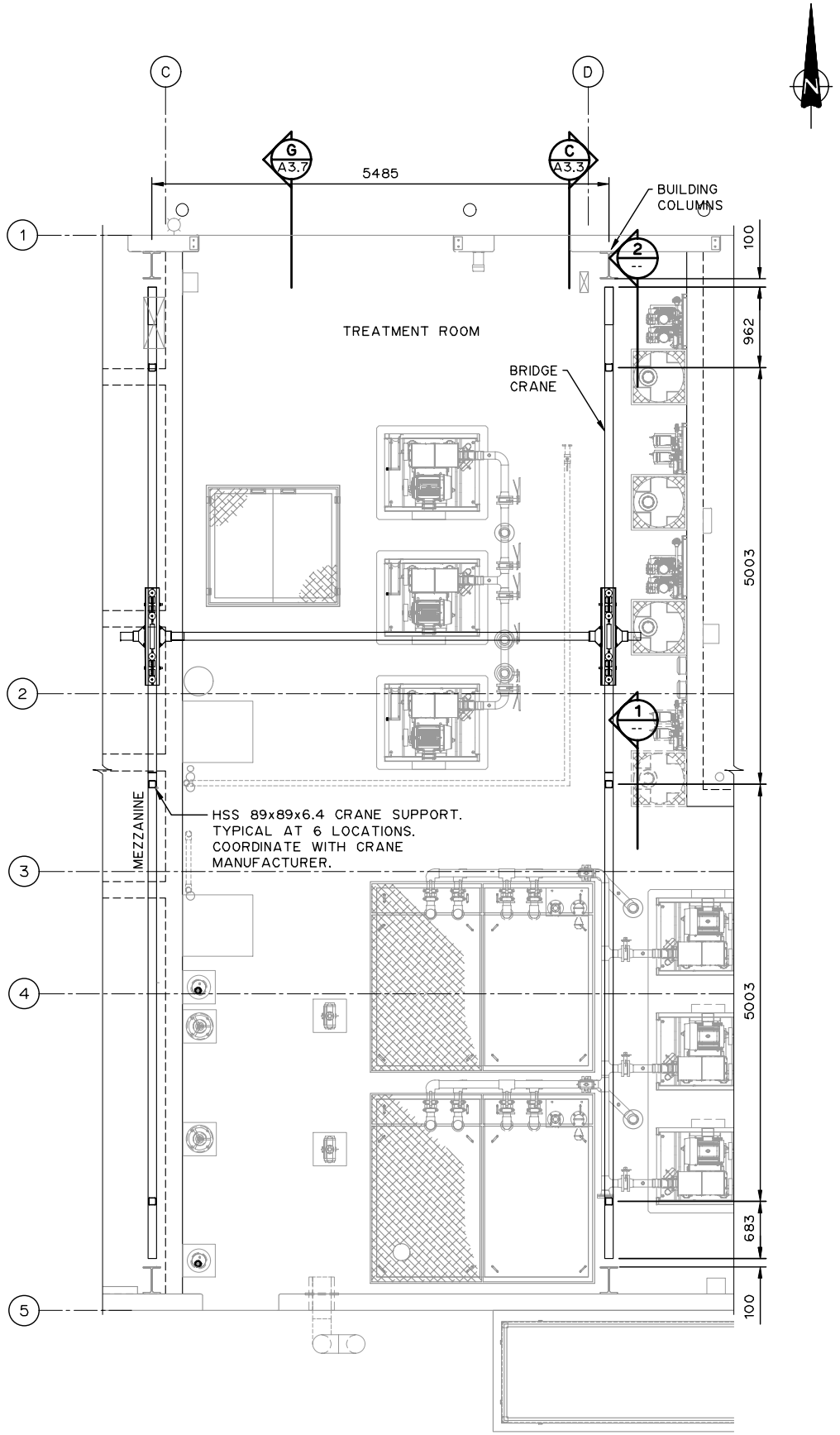

BRIDGE CRANE DETAIL
1:75

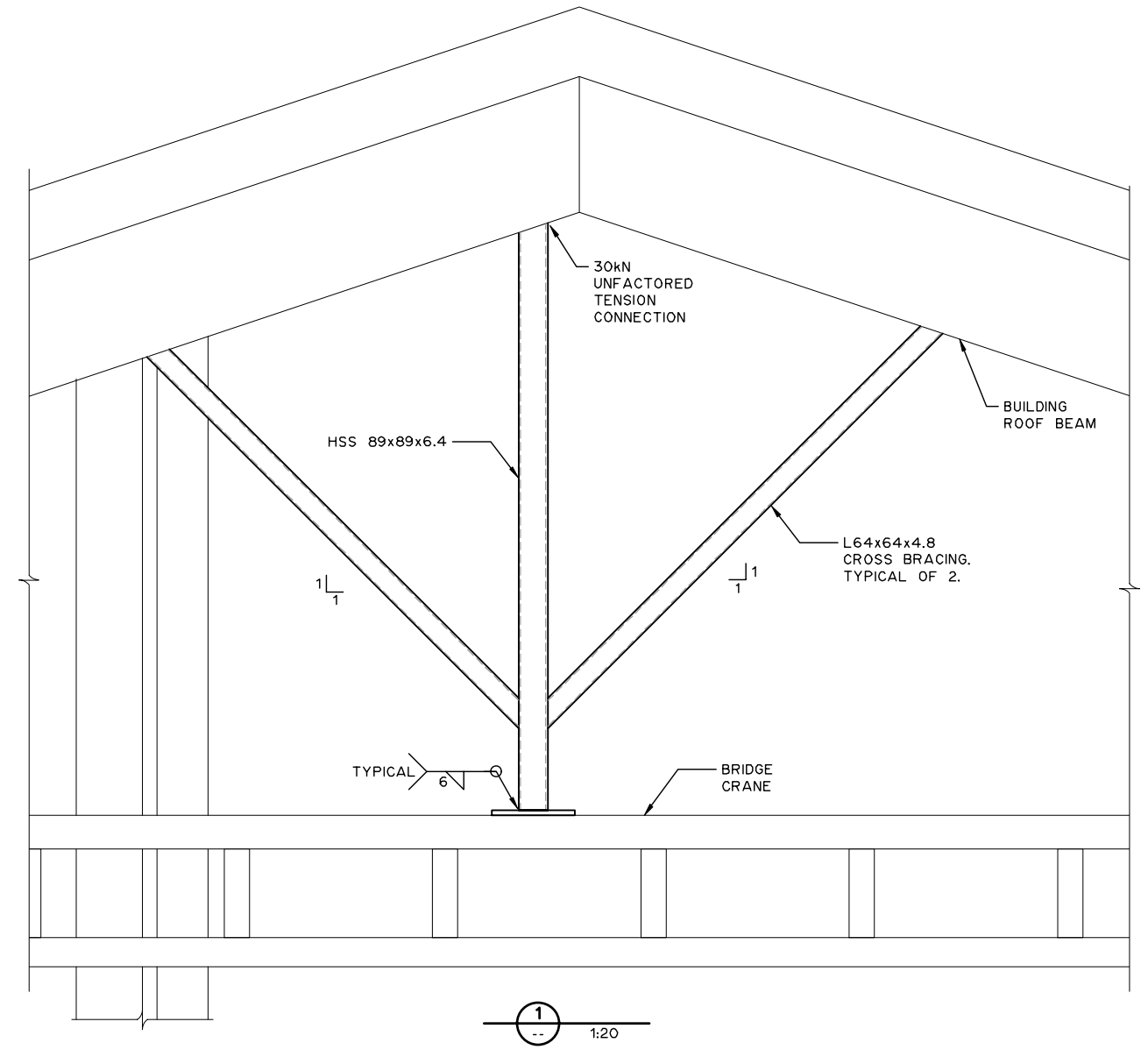

1
1:20

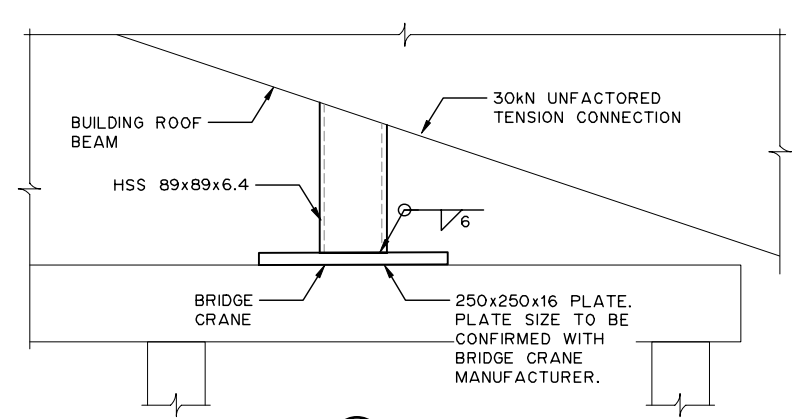

2
1:10

NOTES:

1. ALL DIMENSIONS ARE IN MILLIMETRES AND ELEVATIONS ARE IN METRES UNLESS NOTED OTHERWISE.
2. CONTRACTOR TO PROVIDE HOISTS WITH SERIAL NUMBERS, LOADING RATES AND ENGINEERED DRAWINGS. MONORAIL AND HOISTS TO BE TESTED BY CERTIFIED AGENCY.

THIS DRAWING MAY HAVE BEEN MODIFIED FROM ITS ORIGINAL SIZE. ALL SCALE NOTATIONS INDICATED ARE BASED ON 11"x17" FORMAT DRAWINGS

ISSUE	YY-MM-DD	REVISION
2	21-01-15	FOR CONSTRUCTION
1	20-10-15	FOR TENDER

Association of Professional Engineers & Geoscientists of Saskatchewan
CERTIFICATE OF AUTHORIZATION
MPE Engineering Ltd.
Number C1334
Permission to Consult held by:

Discipline	Sk. Reg. No.	Signature
STRUCTURAL	34196	

PROFESSIONAL ENGINEER W. DING MEMBER 34196 2021 01 15 SASKATCHEWAN

MPE Engineering Ltd.

ENGLISH RIVER ENTERPRISES PROPERTY MANAGEMENT LP

WASTEWATER TREATMENT PLANT
ARCHITECTURAL
BRIDGE CRANE PLAN AND DETAILS

DESIGNED	W.W.L.S.	JOB	7603-002-00
DRAWN	D.F.F.	SCALE	AS SHOWN
DATE	NOVEMBER 2020	DRAWING	A11.1

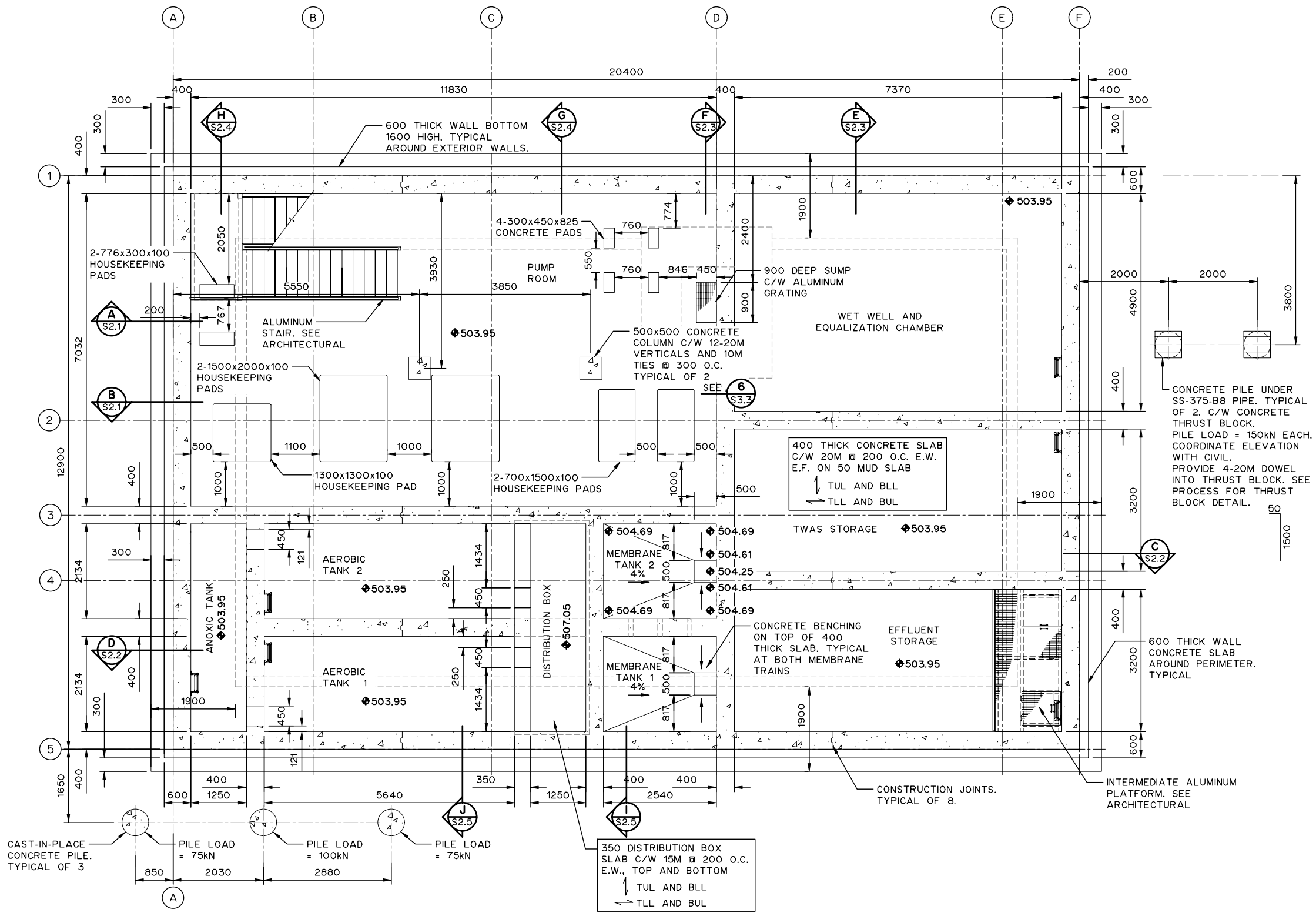

NOTES:

1. ALL DIMENSIONS ARE IN MILLIMETRES AND ELEVATIONS ARE IN METRES UNLESS NOTED OTHERWISE.
2. 20 CHAMFER ALL EXPOSED CONCRETE EDGES.
3. COORDINATE LOCATION OF ALL PENETRATIONS WITH PROCESS.
4. CAST-IN SLEEVES C/W LEAK PLATE FOR ALL FLOOR AND WALL PENETRATIONS. SEE PROCESS FOR DETAILS AND LOCATIONS.
5. CONCRETE PILES ARE TO BE DESIGNED BY PILE DESIGNER. FOLLOW RECOMMENDATIONS PROVIDED BY GEOTECHNICAL REPORT PROVIDED IN CONTRACT.
6. REFER TO S4.1 FOR ADDITIONAL REINFORCING AROUND PENETRATIONS AND CONCRETE PADS.
7. BOTTOM OF EXCAVATION IS TO BE REVIEWED BY GEOTECHNICAL ENGINEER PRIOR TO MUD SLAB. MUD SLAB MUST BE PLACED IMMEDIATELY FOLLOWING GEOTECHNICAL ENGINEER'S APPROVAL. MUD SLAB TO EXTEND FULL WIDTH OF EXCAVATION.
8. TOP SLAB MUST BE IN-PLACED IN ITS ENTIRETY, EXCEPT FOR CANTILEVER SIDEWALKS PRIOR TO BACKFILLING AROUND LOWER LEVEL OR HYDROSTATIC PRESSURE TEST.
9. SEE ARCHITECTURAL FOR CONCRETE FINISHES AND COATINGS.

(SEE BELOW FOR CONTINUATION)

NOTES (CONT'D):

10. SEE ARCHITECTURAL FOR ALL ALUMINUM COMPONENTS. COORDINATE ALL CAST-IN ALUMINUM COMPONENTS.
11. SLOPE FLOOR TO DRAINS
12. REFER TO MECHANICAL DRAWINGS FOR LOCATION OF FLOOR/ HUB DRAINS.

THIS DRAWING MAY HAVE BEEN MODIFIED FROM ITS ORIGINAL SIZE. ALL SCALE NOTATIONS INDICATED ARE BASED ON 11"x17" FORMAT DRAWINGS

ISSUE	YY-MM-DD	REVISION
2	21-01-15	FOR CONSTRUCTION
1	20-10-15	FOR TENDER

Association of Professional Engineers & Geoscientists of Saskatchewan
CERTIFICATE OF AUTHORIZATION
MPE Engineering Ltd.
Number C1334
Permission to Consult held by:

Discipline	Sk. Reg. No.	Signature
STRUCTURAL	34196	

PROFESSIONAL ENGINEER W. SONG MEMBER 34196 2021 01 15 SASKATCHEWAN

MPE Engineering Ltd.

ENGLISH RIVER ENTERPRISES PROPERTY MANAGEMENT LP

WASTEWATER TREATMENT PLANT
STRUCTURAL
LOWER FLOOR PLAN

DESIGNED	W.W.L.S.	JOB	7603-002-00
DRAWN	D.F.F.	SCALE	1:100
DATE	NOVEMBER 2020	DRAWING	S1.1

NOTES (CONT'D):

MAIN FLOOR SLAB DESIGN LOADS:
DEAD LOAD = 10.6 kPa
LIVE LOAD = 15 kPa

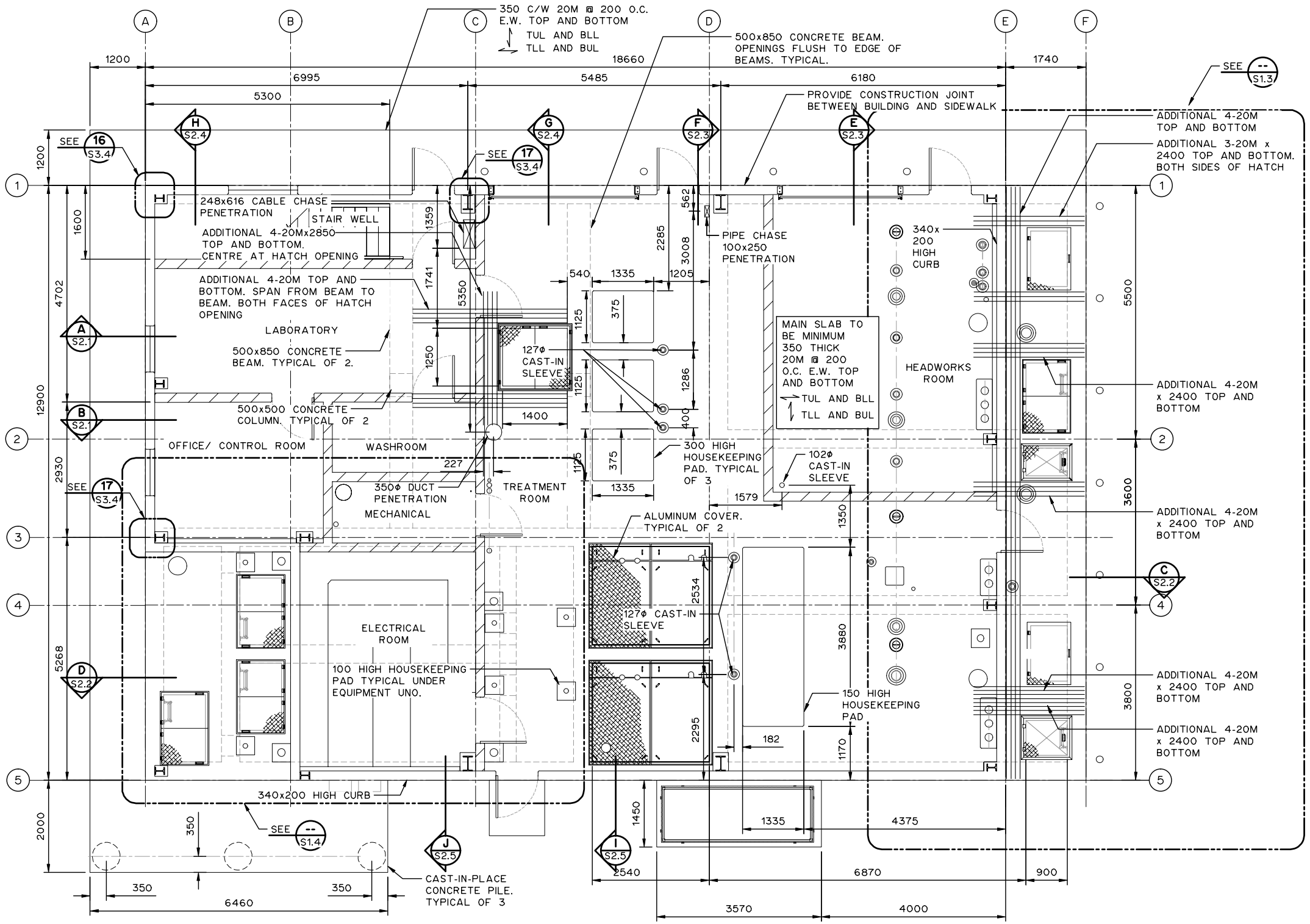

NOTES:

1. ALL DIMENSIONS ARE IN MILLIMETRES AND ELEVATIONS ARE IN METRES UNLESS NOTED OTHERWISE.
2. COORDINATE ALL CONCRETE PADS AND PENETRATIONS, SIZES AND LOCATIONS WITH OTHER DISCIPLINES.
3. SEE ARCHITECTURAL FOR LOCATION OF WALL CURBS. DISCONTINUE CURBS AT DOOR OPENINGS.
4. CAST-IN SLEEVES C/W LEAK PLATE FOR ALL PENETRATIONS. LEAK SEAL AND LEAK PLATE MIGHT NOT BE SHOWN ON THE DRAWING. SEE PROCESS FOR DETAIL.
5. REFER TO S4.1 FOR ADDITIONAL REINFORCING AROUND PENETRATIONS AND REINFORCING DETAILS FOR CONCRETE PADS.
6. 20 CHAMFER ALL EXPOSED CONCRETE EDGE.
7. SEE SPECIFICATION SECTION 03300 3.3.6 FOR CONDUIT AND PIPE INSTALLED IN SLAB.
8. SEE ARCHITECTURAL FOR BUILDING AND ALUMINUM COMPONENTS.
9. SEE ARCHITECTURAL FOR CONCRETE FINISHES AND COATINGS.
10. CAST-IN ANCHOR FOR BUILDING COLUMNS TO BE MINIMUM 500 LONG C/W 50 HOOK.
11. PROVIDE 200x200 CONCRETE CONCRETE CURB UNDER EXTERIOR AND INTERIOR WALLS. TYPICAL UNLESS NOTE OTHERWISE. SEE S4.1 FOR REINFORCING.
12. REFER TO MECHANICAL DRAWINGS FOR LOCATION OF FLOOR/HUB DRAINS.

THIS DRAWING MAY HAVE BEEN MODIFIED FROM ITS ORIGINAL SIZE. ALL SCALE NOTATIONS INDICATED ARE BASED ON 11"x17" FORMAT DRAWINGS

ISSUE	YY-MM-DD	REVISION
2	21-01-15	FOR CONSTRUCTION
1	20-10-15	FOR TENDER

Association of Professional Engineers & Geoscientists of Saskatchewan
CERTIFICATE OF AUTHORIZATION
MPE Engineering Ltd.
Number C1334
Permission to Consult held by:

Discipline	Sk. Reg. No.	Signature
STRUCTURAL	34196	

PROFESSIONAL ENGINEER W. SONG MEMBER 34196 2021 01 15 SASKATCHEWAN

MPE Engineering Ltd.

ENGLISH RIVER ENTERPRISES PROPERTY MANAGEMENT LP

WASTEWATER TREATMENT PLANT
STRUCTURAL
MAIN FLOOR PLAN

DESIGNED	W.W.L.S.	JOB	7603-002-00
DRAWN	D.F.F.	SCALE	1:100
DATE	NOVEMBER 2020	DRAWING	S1.2

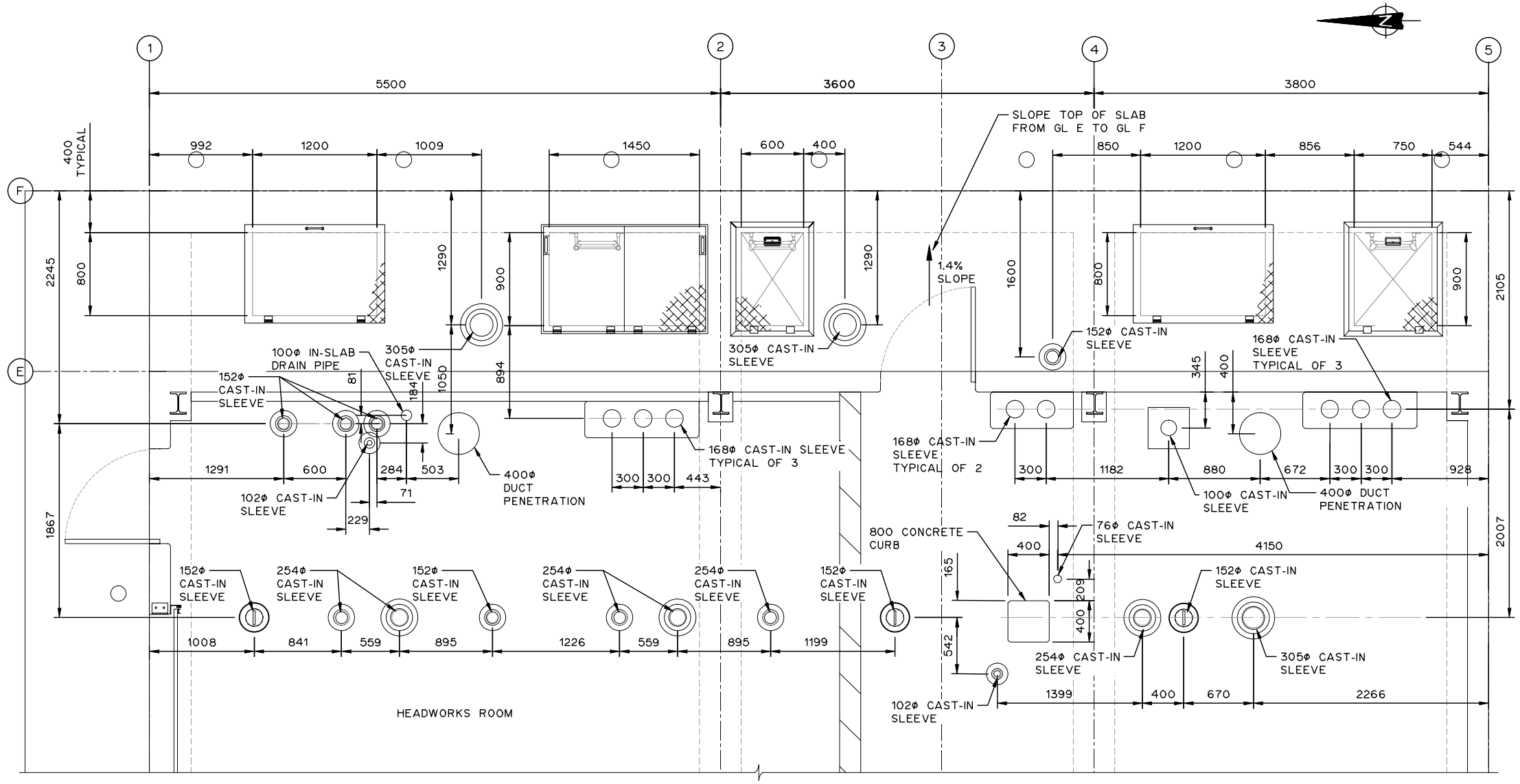

NOTES:

1. ALL DIMENSIONS ARE IN MILLIMETRES AND ELEVATIONS ARE IN METRES UNLESS NOTED OTHERWISE.
2. COORDINATE ALL CONCRETE PADS AND PENETRATIONS, SIZES AND LOCATIONS WITH OTHER DISCIPLINES.
3. SEE ARCHITECTURAL FOR LOCATION OF WALL CURBS. DISCONTINUE CURBS AT DOOR OPENINGS.
4. CAST-IN SLEEVES C/W LEAK PLATE FOR ALL PENETRATIONS. LEAK SEAL AND LEAK PLATE MIGHT NOT BE SHOWN ON THE DRAWING. SEE PROCESS FOR DETAIL.
5. REFER TO S4.1 FOR ADDITIONAL REINFORCING AROUND PENETRATIONS AND REINFORCING DETAILS FOR CONCRETE PADS.
6. 20 CHAMFER ALL EXPOSED CONCRETE EDGE.
7. SEE SPECIFICATION SECTION 03300 3.3.6 FOR CONDUIT AND PIPE INSTALLED IN SLAB.
8. SEE ARCHITECTURAL FOR BUILDING AND ALUMINUM COMPONENTS.
9. SEE ARCHITECTURAL FOR CONCRETE FINISHES AND COATINGS.
10. CAST-IN ANCHOR FOR BUILDING COLUMNS TO BE MINIMUM 500 LONG C/W 50 HOOK.
11. PROVIDE 200x200 CONCRETE CONCRETE CURB UNDER EXTERIOR AND INTERIOR WALLS. TYPICAL UNLESS NOTE OTHERWISE.

MAIN FLOOR SLAB DESIGN LOADS:

DEAD LOAD = 10.6 kPa

LIVE LOAD = 15 kPa

THIS DRAWING MAY HAVE BEEN MODIFIED FROM ITS ORIGINAL SIZE. ALL SCALE NOTATIONS INDICATED ARE BASED ON 11"x17" FORMAT DRAWINGS

ISSUE	YY-MM-DD	REVISION
2	21-01-15	FOR CONSTRUCTION
1	20-10-15	FOR TENDER

Association of Professional Engineers & Geoscientists of Saskatchewan
CERTIFICATE OF AUTHORIZATION
MPE Engineering Ltd.
Number C1334
Permission to Consult held by:

Discipline	Sk. Reg. No.	Signature
STRUCTURAL	34196	

PROFESSIONAL ENGINEER
W. DONG
MEMBER 34196
2021 01 15
SASKATCHEWAN

MPE Engineering Ltd.

ENGLISH RIVER ENTERPRISES PROPERTY MANAGEMENT LP

WASTEWATER TREATMENT PLANT

STRUCTURAL

PARTIAL MAIN FLOOR PLAN

DESIGNED	W.W.L.S.	JOB	7603-002-00
DRAWN	D.F.F.	SCALE	1:50
DATE	NOVEMBER 2020	DRAWING	S1.3

MAIN FLOOR SLAB DESIGN LOADS:
DEAD LOAD = FLOOR SELF-WEIGHT
LIVE LOAD = WTP - 16kPa
MEETING ROOM, WASHROOM,
STORAGE - 4.8kPa

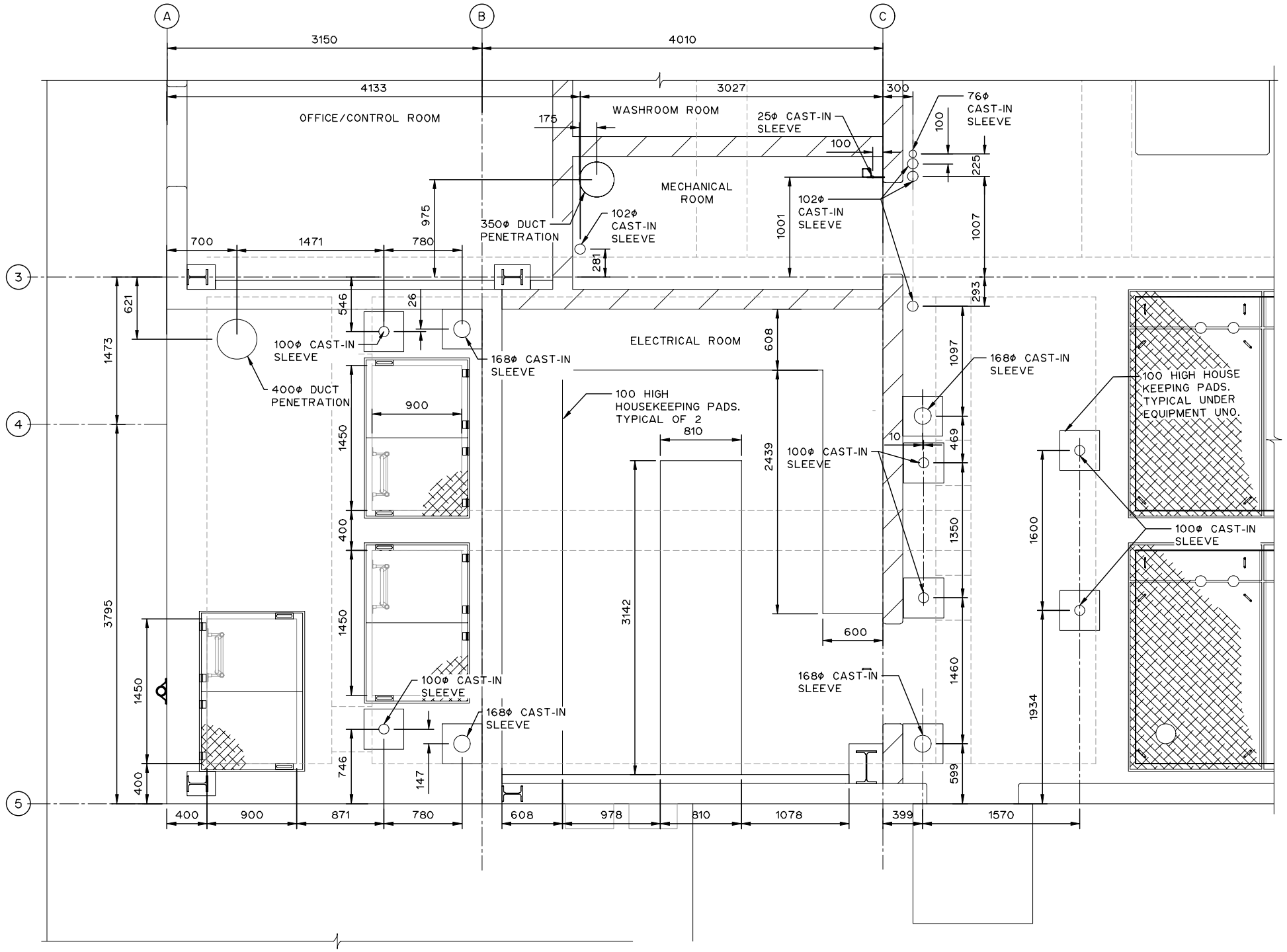

NOTES:

1. ALL DIMENSIONS ARE IN MILLIMETRES AND ELEVATIONS ARE IN METRES UNLESS NOTED OTHERWISE.
2. COORDINATE ALL CONCRETE PADS AND PENETRATIONS, SIZES AND LOCATIONS WITH OTHER DISCIPLINES.
3. SEE ARCHITECTURAL FOR LOCATION OF WALL CURBS. DISCONTINUE CURBS AT DOOR OPENINGS.
4. CAST-IN SLEEVES C/W LEAK PLATE FOR ALL PENETRATIONS. LEAK SEAL AND LEAK PLATE MIGHT NOT BE SHOWN ON THE DRAWING. SEE PROCESS FOR DETAIL.
5. REFER TO S4.1 FOR ADDITIONAL REINFORCING AROUND PENETRATIONS AND REINFORCING DETAILS FOR CONCRETE PADS.
6. 20 CHAMFER ALL EXPOSED CONCRETE EDGE.
7. SEE SPECIFICATION SECTION 03300 3.3.6 FOR CONDUIT AND PIPE INSTALLED IN SLAB.
8. SEE ARCHITECTURAL FOR BUILDING AND ALUMINUM COMPONENTS.
9. SEE ARCHITECTURAL FOR CONCRETE FINISHES AND COATINGS.
10. CAST-IN ANCHOR FOR BUILDING COLUMNS TO BE MINIMUM 500 LONG C/W 50 HOOK.
11. PROVIDE 200x200 CONCRETE CONCRETE CURB UNDER EXTERIOR AND INTERIOR WALLS. TYPICAL UNLESS NOTE OTHERWISE. SEE S4.1 FOR REINFORCING.

THIS DRAWING MAY HAVE BEEN MODIFIED FROM ITS ORIGINAL SIZE. ALL SCALE NOTATIONS INDICATED ARE BASED ON 11"x17" FORMAT DRAWINGS

ISSUE	YY-MM-DD	REVISION
2	21-01-15	FOR CONSTRUCTION
1	20-10-15	FOR TENDER

Association of Professional Engineers & Geoscientists of Saskatchewan
CERTIFICATE OF AUTHORIZATION
MPE Engineering Ltd.
Number C1334
Permission to Consult held by:

Discipline	Sk. Reg. No.	Signature
STRUCTURAL	34196	

PROFESSIONAL ENGINEER W. SONG MEMBER 34196 2021 01 15 SASKATCHEWAN

MPE Engineering Ltd.

ENGLISH RIVER ENTERPRISES PROPERTY MANAGEMENT LP

WASTEWATER TREATMENT PLANT
STRUCTURAL
PARTIAL MAIN FLOOR PLAN

DESIGNED	W.W.L.S.	JOB	7603-002-00
DRAWN	D.F.F.	SCALE	1:50
DATE	NOVEMBER 2020	DRAWING	S1.4

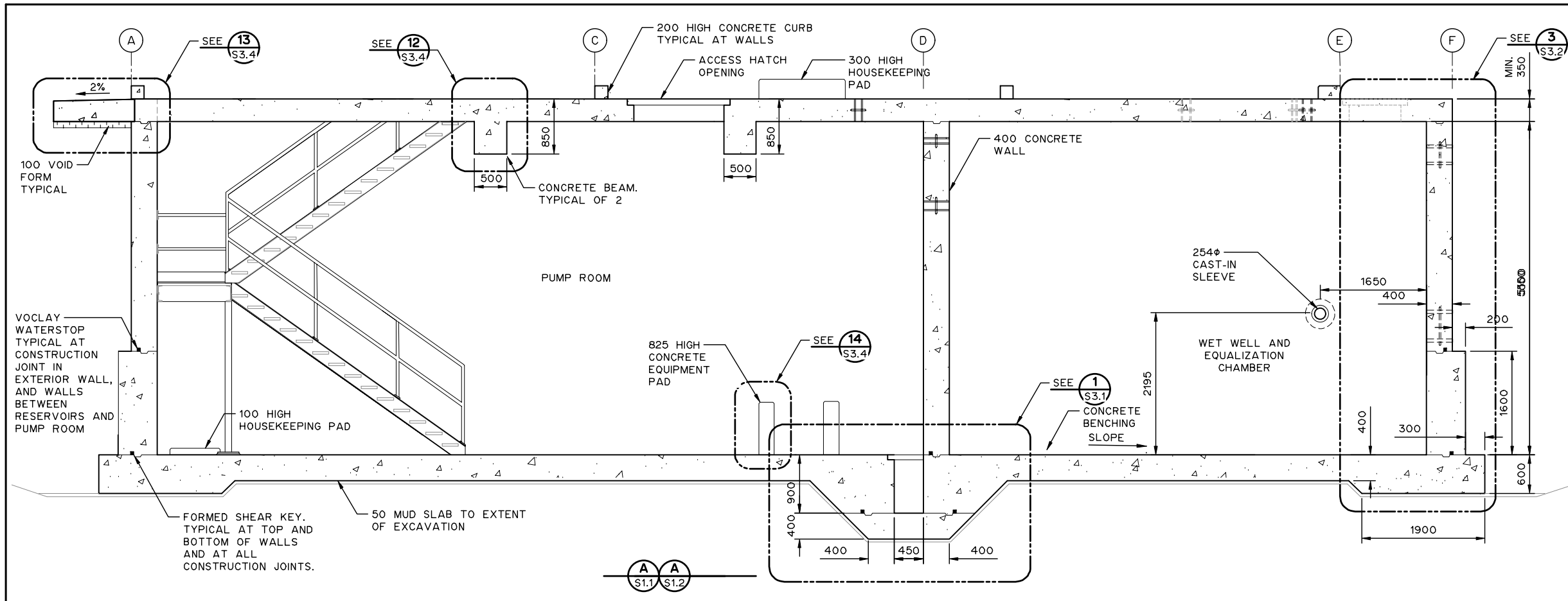

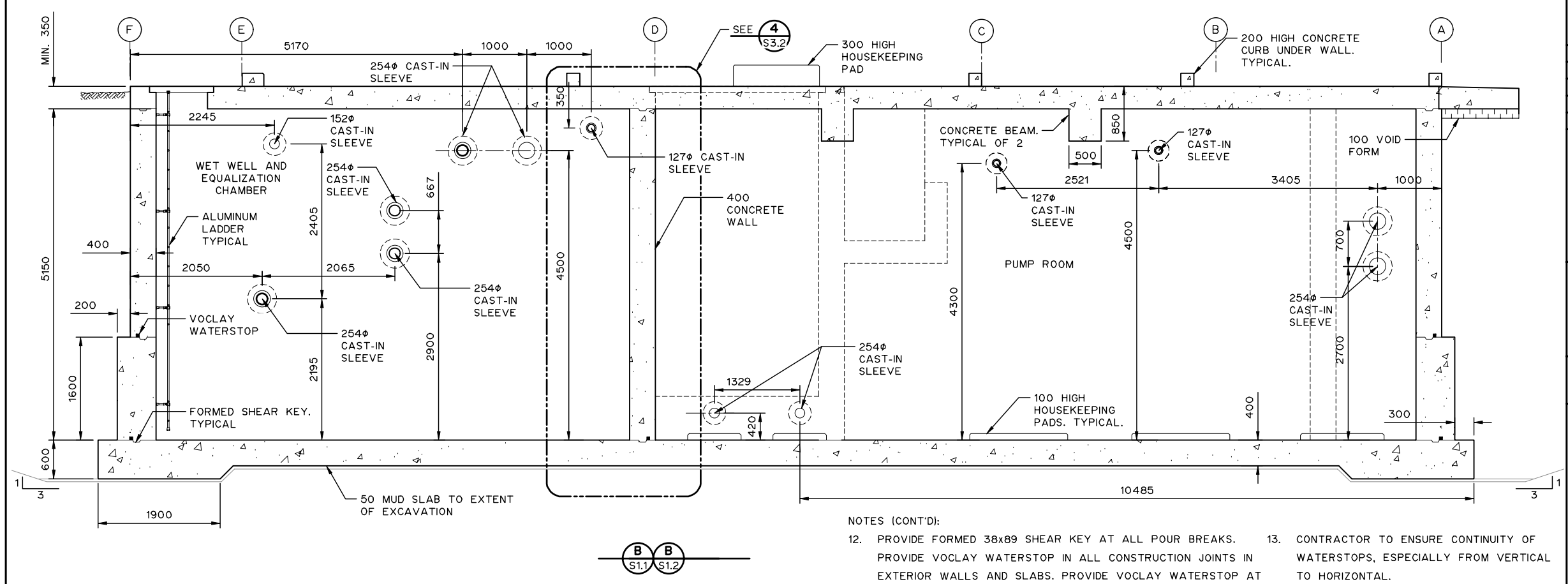

NOTES:

1. ALL DIMENSIONS ARE IN MILLIMETRES AND ELEVATIONS ARE IN METRES UNLESS NOTED OTHERWISE.
2. MUD SLAB TO EXTEND FULL WIDTH OF EXCAVATION.
3. 20 CHAMFER ALL EXPOSED CONCRETE EDGES.
4. COORDINATE ALL CAST-IN ALUMINUM COMPONENTS WITH ARCHITECTURAL.
5. COORDINATE LOCATION AND SIZE OF ALL FLOOR AND WALL PENETRATIONS WITH OTHER DISCIPLINES.
6. BOTTOM OF EXCAVATION IS TO BE REVIEWED BY GEOTECHNICAL ENGINEER PRIOR TO MUD SLAB. MUD SLAB MUST BE PLACED IMMEDIATELY FOLLOWING ENGINEER'S APPROVAL.
7. TOP SLAB MUST BE IN-PLACE IN ITS ENTIRETY PRIOR TO BACKFILLING AROUND RESERVOIR OR HYDROSTATIC PRESSURE TEST.
8. CAST-IN SLEEVE C/W LEAK PLATE FOR ALL PENETRATIONS. LEAK SEAL AND LEAK PLATE MIGHT NOT BE SHOWN IN THE DRAWING. SEE PROCESS FOR DETAIL.
9. SEE ARCHITECTURAL FOR CONCRETE FINISHES AND COATINGS.
10. SEE SPECIFICATIONS SECTION 03300 3.3.6 FOR CONDUITS AND PIPES INSTALLED IN SLAB.
11. SEE ARCHITECTURAL FOR WIDTH OF WALL CONCRETE CURBS, DISCONTINUE CURBS AT DOOR OPENINGS.

(SEE BELOW FOR CONTINUATION)

NOTES (CONT'D):

12. PROVIDE FORMED 38x89 SHEAR KEY AT ALL POUR BREAKS. PROVIDE VOCLAY WATERSTOP IN ALL CONSTRUCTION JOINTS IN EXTERIOR WALLS AND SLABS. PROVIDE VOCLAY WATERSTOP AT BOTTOM OF INTERIOR WALLS THAT SEPARATE PUMP ROOM AND ADJACENT RESERVOIRS.
13. CONTRACTOR TO ENSURE CONTINUITY OF WATERSTOPS, ESPECIALLY FROM VERTICAL TO HORIZONTAL.

THIS DRAWING MAY HAVE BEEN MODIFIED FROM ITS ORIGINAL SIZE. ALL SCALE NOTATIONS INDICATED ARE BASED ON 11"x17" FORMAT DRAWINGS

ISSUE	YY-MM-DD	REVISION
2	21-01-15	FOR CONSTRUCTION
1	20-10-15	FOR TENDER

Association of Professional Engineers & Geoscientists of Saskatchewan
CERTIFICATE OF AUTHORIZATION
MPE Engineering Ltd.
Number C1334
Permission to Consult held by:

Discipline	Sk. Reg. No.	Signature
STRUCTURAL	34196	

PROFESSIONAL ENGINEER W. SONG MEMBER 34196 2021 01 15 SASKATCHEWAN

MPE Engineering Ltd.

ENGLISH RIVER ENTERPRISES PROPERTY MANAGEMENT LP

WASTEWATER TREATMENT PLANT
STRUCTURAL
CONCRETE SECTIONS

DESIGNED	I.K., W.W.L.S.	JOB	7603-002-00
DRAWN	D.F.F.	SCALE	1:75
DATE	NOVEMBER 2020	DRAWING	S2.1

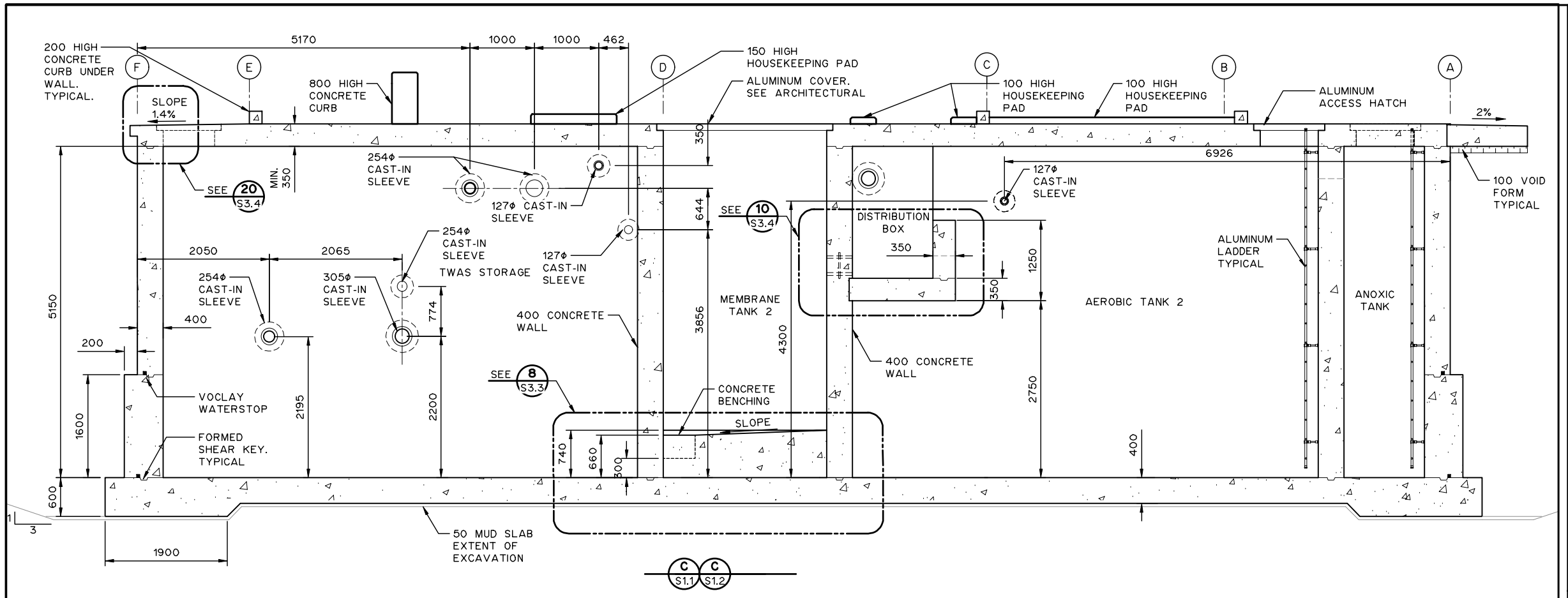

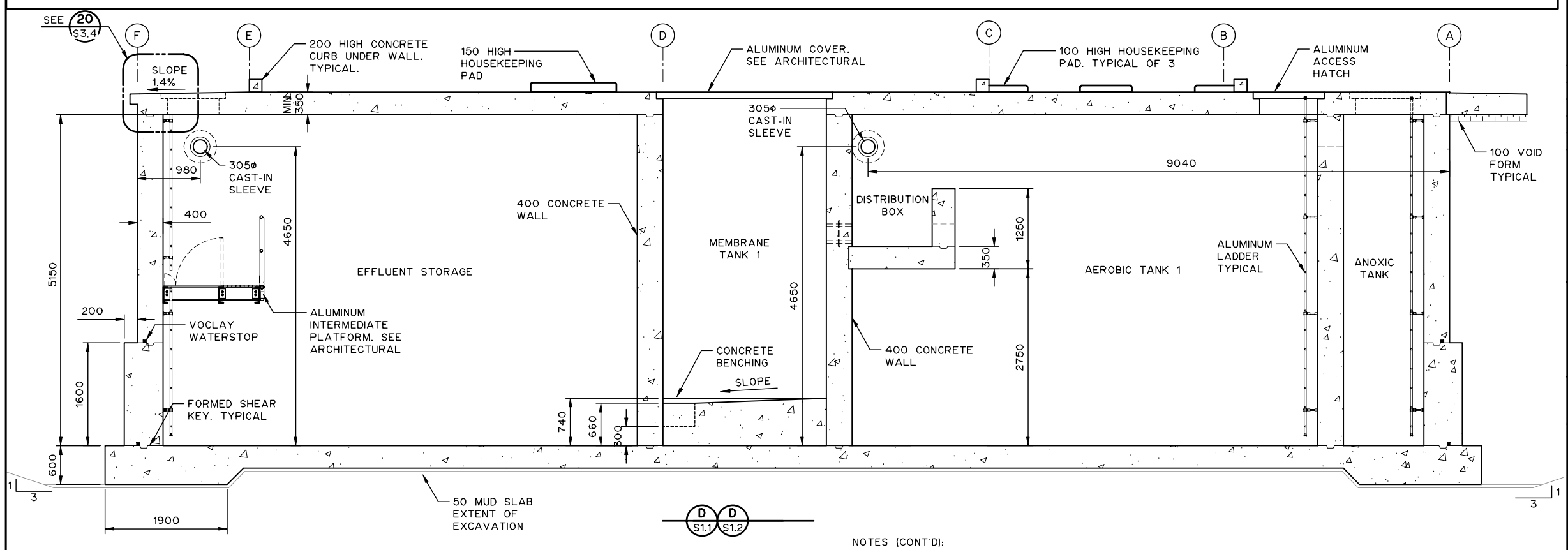

NOTES:

1. ALL DIMENSIONS ARE IN MILLIMETRES AND ELEVATIONS ARE IN METRES UNLESS NOTED OTHERWISE.
2. MUD SLAB TO EXTEND FULL WIDTH OF EXCAVATION.
3. 20 CHAMFER ALL EXPOSED CONCRETE EDGES.
4. COORDINATE ALL CAST-IN ALUMINUM COMPONENTS WITH ARCHITECTURAL.
5. COORDINATE LOCATION AND SIZE OF ALL FLOOR AND WALL PENETRATIONS WITH OTHER DISCIPLINES.
6. BOTTOM OF EXCAVATION IS TO BE REVIEWED BY GEOTECHNICAL ENGINEER PRIOR TO MUD SLAB. MUD SLAB MUST BE PLACED IMMEDIATELY FOLLOWING ENGINEER'S APPROVAL.
7. TOP SLAB MUST BE IN-PLACE IN ITS ENTIRETY PRIOR TO BACKFILLING AROUND RESERVOIR OR HYDROSTATIC PRESSURE TEST.
8. CAST-IN SLEEVE C/W LEAK PLATE FOR ALL PENETRATIONS. LEAK SEAL AND LEAK PLATE MIGHT NOT BE SHOWN IN THE DRAWING. SEE PROCESS FOR DETAIL.
9. SEE ARCHITECTURAL FOR CONCRETE FINISHES AND COATINGS.
10. SEE SPECIFICATIONS SECTION 03300 3.3.6 FOR CONDUITS AND PIPES INSTALLED IN SLAB.
11. SEE ARCHITECTURAL FOR WIDTH OF WALL CONCRETE CURBS, DISCONTINUE CURBS AT DOOR OPENINGS.

(SEE BELOW FOR CONTINUATION)

NOTES (CONT'D):

12. PROVIDE FORMED 38x89 SHEAR KEY AT ALL POUR BREAKS. PROVIDE VOCLAY WATERSTOP IN ALL CONSTRUCTION JOINTS IN EXTERIOR WALLS AND SLABS. PROVIDE VOCLAY WATERSTOP AT BOTTOM OF INTERIOR WALLS THAT SEPARATE PUMP ROOM AND ADJACENT RESERVOIRS.
13. CONTRACTOR TO ENSURE CONTINUITY OF WATERSTOPS, ESPECIALLY FROM VERTICAL TO HORIZONTAL.

THIS DRAWING MAY HAVE BEEN MODIFIED FROM ITS ORIGINAL SIZE. ALL SCALE NOTATIONS INDICATED ARE BASED ON 11"x17" FORMAT DRAWINGS

ISSUE	YY-MM-DD	REVISION
2	21-01-15	FOR CONSTRUCTION
1	20-10-15	FOR TENDER

Association of Professional Engineers & Geoscientists of Saskatchewan
CERTIFICATE OF AUTHORIZATION
MPE Engineering Ltd.
Number C1334
Permission to Consult held by:

Discipline	Sk. Reg. No.	Signature
STRUCTURAL	34196	

PROFESSIONAL ENGINEER W. SONG MEMBER 34196 2021 01 15 SASKATCHEWAN

MPE Engineering Ltd.

ENGLISH RIVER ENTERPRISES PROPERTY MANAGEMENT LP

WASTEWATER TREATMENT PLANT
STRUCTURAL
CONCRETE SECTIONS

DESIGNED	I.K., W.W.L.S.	JOB	7603-002-00
DRAWN	D.F.F.	SCALE	1:75
DATE	NOVEMBER 2020	DRAWING	S2.2

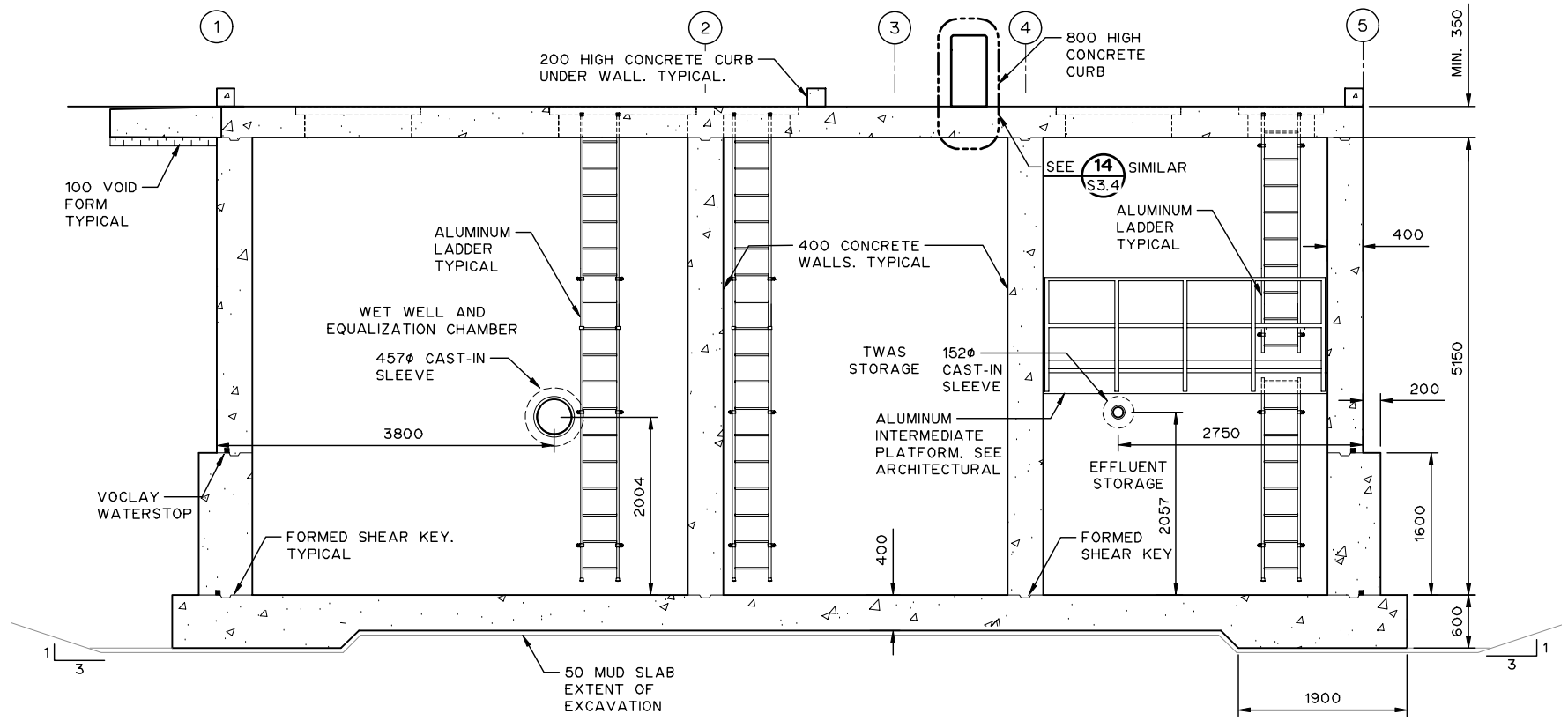

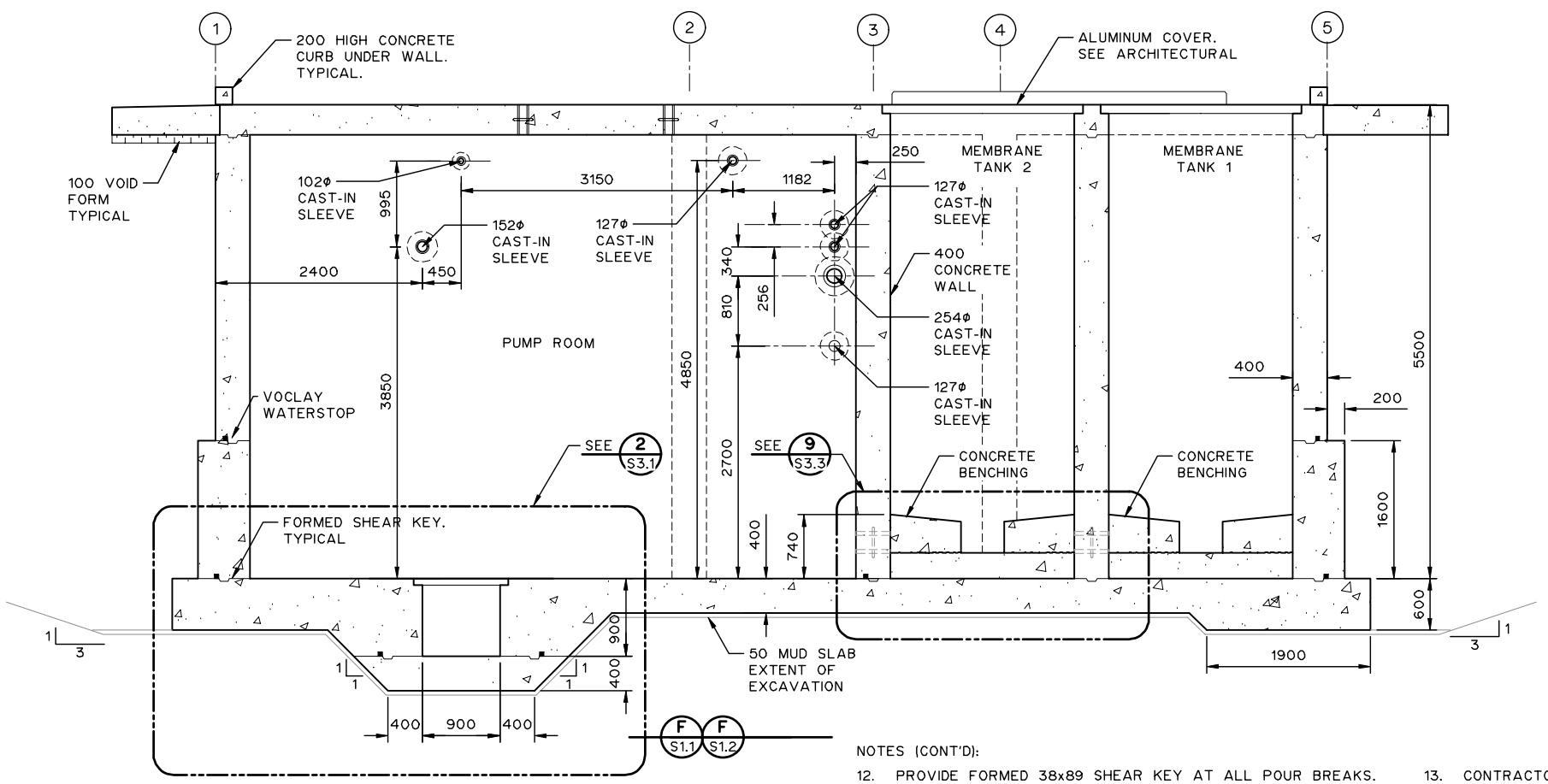

NOTES (CONT'D):

12. PROVIDE FORMED 38x89 SHEAR KEY AT ALL POUR BREAKS. PROVIDE VOCLAY WATERSTOP IN ALL CONSTRUCTION JOINTS IN EXTERIOR WALLS AND SLABS. PROVIDE VOCLAY WATERSTOP AT BOTTOM OF INTERIOR WALLS THAT SEPARATE PUMP ROOM AND ADJACENT RESERVOIRS.
13. CONTRACTOR TO ENSURE CONTINUITY OF WATERSTOPS, ESPECIALLY FROM VERTICAL TO HORIZONTAL.

NOTES:

1. ALL DIMENSIONS ARE IN MILLIMETRES AND ELEVATIONS ARE IN METRES UNLESS NOTED OTHERWISE.
2. MUD SLAB TO EXTEND FULL WIDTH OF EXCAVATION.
3. 20 CHAMFER ALL EXPOSED CONCRETE EDGES.
4. COORDINATE ALL CAST-IN ALUMINUM COMPONENTS WITH ARCHITECTURAL.
5. COORDINATE LOCATION AND SIZE OF ALL FLOOR AND WALL PENETRATIONS WITH OTHER DISCIPLINES.
6. BOTTOM OF EXCAVATION IS TO BE REVIEWED BY GEOTECHNICAL ENGINEER PRIOR TO MUD SLAB. MUD SLAB MUST BE PLACED IMMEDIATELY FOLLOWING ENGINEER'S APPROVAL.
7. TOP SLAB MUST BE IN-PLACE IN ITS ENTIRETY PRIOR TO BACKFILLING AROUND RESERVOIR OR HYDROSTATIC PRESSURE TEST.
8. CAST-IN SLEEVE C/W LEAK PLATE FOR ALL PENETRATIONS. LEAK SEAL AND LEAK PLATE MIGHT NOT BE SHOWN IN THE DRAWING. SEE PROCESS FOR DETAIL.
9. SEE ARCHITECTURAL FOR CONCRETE FINISHES AND COATINGS.
10. SEE SPECIFICATIONS SECTION 03300 3.3.6 FOR CONDUITS AND PIPES INSTALLED IN SLAB.
11. SEE ARCHITECTURAL FOR WIDTH OF WALL CONCRETE CURBS, DISCONTINUE CURBS AT DOOR OPENINGS.

(SEE BELOW FOR CONTINUATION)

THIS DRAWING MAY HAVE BEEN MODIFIED FROM ITS ORIGINAL SIZE. ALL SCALE NOTATIONS INDICATED ARE BASED ON 11"x17" FORMAT DRAWINGS

ISSUE	YY-MM-DD	REVISION
2	21-01-15	FOR CONSTRUCTION
1	20-10-15	FOR TENDER

Association of Professional Engineers & Geoscientists of Saskatchewan
CERTIFICATE OF AUTHORIZATION
MPE Engineering Ltd.
Number C1334
Permission to Consult held by:

Discipline	Sk. Reg. No.	Signature
STRUCTURAL	34196	

PROFESSIONAL ENGINEER W. SONG MEMBER 34196 2021 01 15 SASKATCHEWAN

MPE Engineering Ltd.

ENGLISH RIVER ENTERPRISES PROPERTY MANAGEMENT LP

WASTEWATER TREATMENT PLANT
STRUCTURAL
CONCRETE SECTIONS

DESIGNED	I.K., W.W.L.S.	JOB	7603-002-00
DRAWN	D.F.F.	SCALE	1:75
DATE	NOVEMBER 2020	DRAWING	S2.3

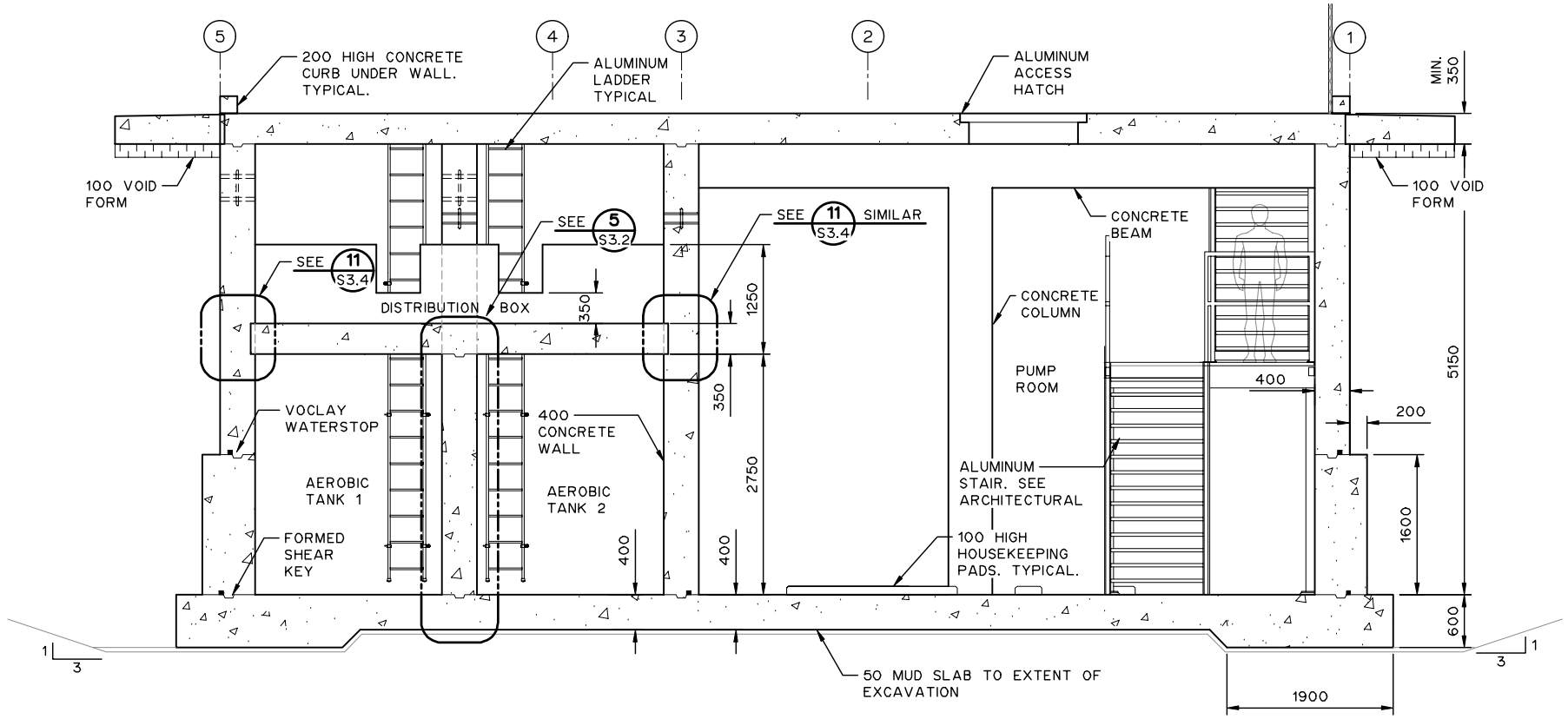

G
S1.1

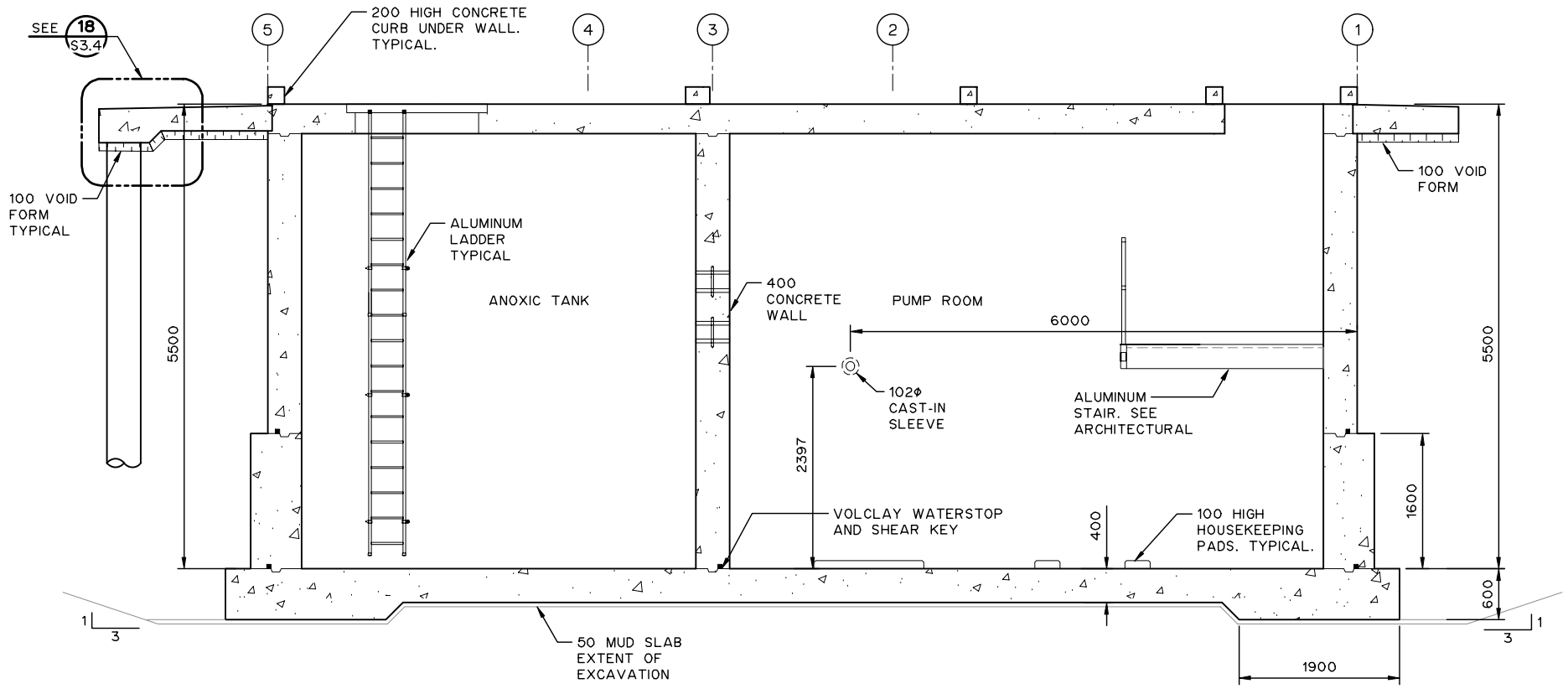

H
S1.1

NOTES (CONT'D):

12. PROVIDE FORMED 38x89 SHEAR KEY AT ALL POUR BREAKS. PROVIDE VOCLAY WATERSTOP IN ALL CONSTRUCTION JOINTS IN EXTERIOR WALLS AND SLABS. PROVIDE VOCLAY WATERSTOP AT BOTTOM OF INTERIOR WALLS THAT SEPARATE PUMP ROOM AND ADJACENT RESERVOIRS.
13. CONTRACTOR TO ENSURE CONTINUITY OF WATERSTOPS, ESPECIALLY FROM VERTICAL TO HORIZONTAL.

NOTES:

1. ALL DIMENSIONS ARE IN MILLIMETRES AND ELEVATIONS ARE IN METRES UNLESS NOTED OTHERWISE.
2. MUD SLAB TO EXTEND FULL WIDTH OF EXCAVATION.
3. 20 CHAMFER ALL EXPOSED CONCRETE EDGES.
4. COORDINATE ALL CAST-IN ALUMINUM COMPONENTS WITH ARCHITECTURAL.
5. COORDINATE LOCATION AND SIZE OF ALL FLOOR AND WALL PENETRATIONS WITH OTHER DISCIPLINES.
6. BOTTOM OF EXCAVATION IS TO BE REVIEWED BY GEOTECHNICAL ENGINEER PRIOR TO MUD SLAB. MUD SLAB MUST BE PLACED IMMEDIATELY FOLLOWING ENGINEER'S APPROVAL.
7. TOP SLAB MUST BE IN-PLACE IN ITS ENTIRETY PRIOR TO BACKFILLING AROUND RESERVOIR OR HYDROSTATIC PRESSURE TEST.
8. CAST-IN SLEEVE C/W LEAK PLATE FOR ALL PENETRATIONS. LEAK SEAL AND LEAK PLATE MIGHT NOT BE SHOWN IN THE DRAWING. SEE PROCESS FOR DETAIL.
9. SEE ARCHITECTURAL FOR CONCRETE FINISHES AND COATINGS.
10. SEE SPECIFICATIONS SECTION 03300 3.3.6 FOR CONDUITS AND PIPES INSTALLED IN SLAB.
11. SEE ARCHITECTURAL FOR WIDTH OF WALL CONCRETE CURBS, DISCONTINUE CURBS AT DOOR OPENINGS.

(SEE BELOW FOR CONTINUATION)

THIS DRAWING MAY HAVE BEEN MODIFIED FROM ITS ORIGINAL SIZE. ALL SCALE NOTATIONS INDICATED ARE BASED ON 11"x17" FORMAT DRAWINGS

ISSUE	YY-MM-DD	REVISION
2	21-01-15	FOR CONSTRUCTION
1	20-10-15	FOR TENDER

Association of Professional Engineers & Geoscientists of Saskatchewan
CERTIFICATE OF AUTHORIZATION
MPE Engineering Ltd.
Number C1334
Permission to Consult held by:

Discipline	Sk. Reg. No.	Signature
STRUCTURAL	34196	

PROFESSIONAL ENGINEER W. SONG MEMBER 34196 2021 01 15 SASKATCHEWAN

MPE Engineering Ltd.

ENGLISH RIVER ENTERPRISES PROPERTY MANAGEMENT LP

WASTEWATER TREATMENT PLANT
STRUCTURAL
CONCRETE SECTIONS

DESIGNED	I.K., W.W.L.S.	JOB	7603-002-00
DRAWN	D.F.F.	SCALE	1:75
DATE	NOVEMBER 2020	DRAWING	S2.4

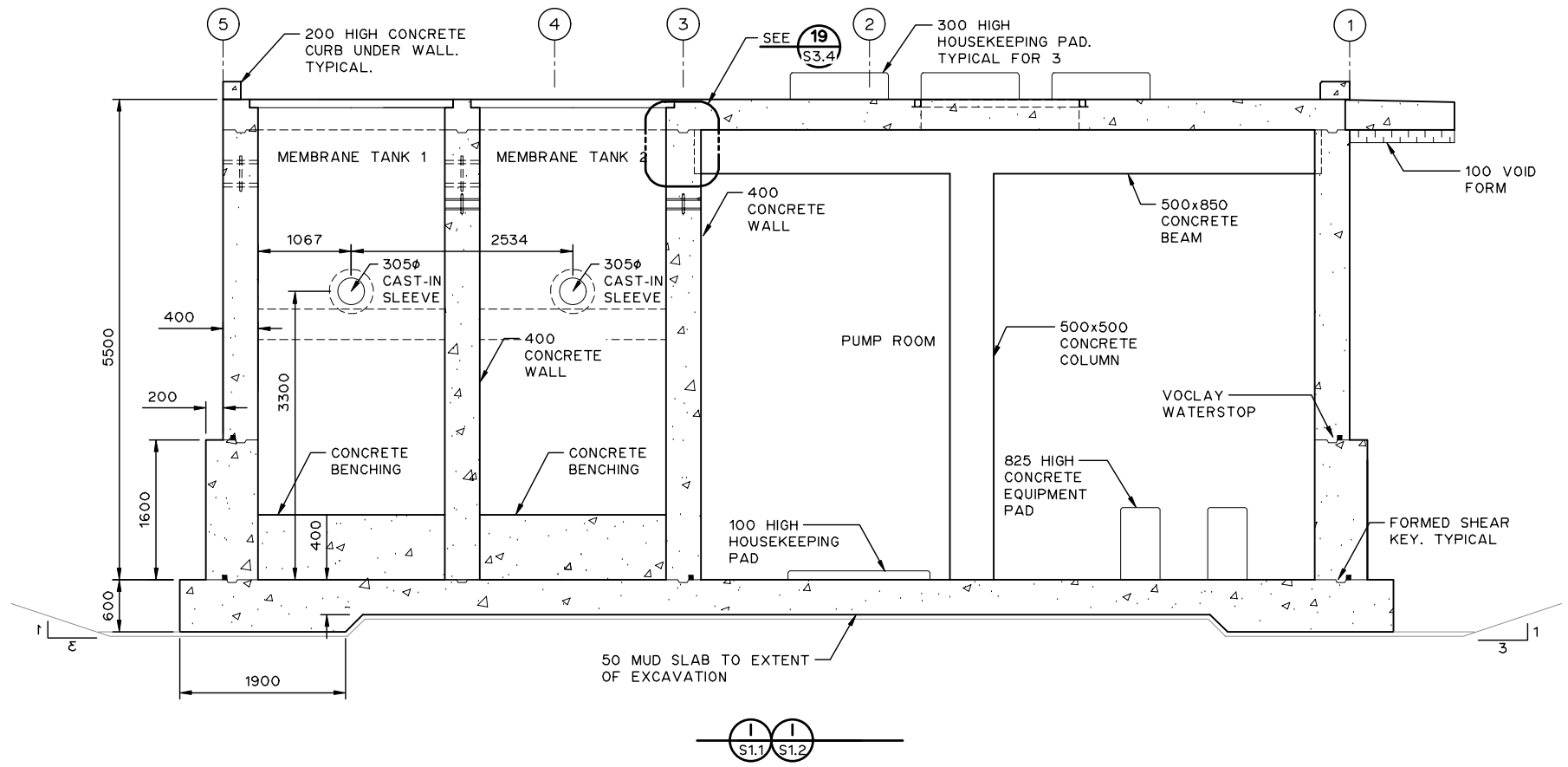

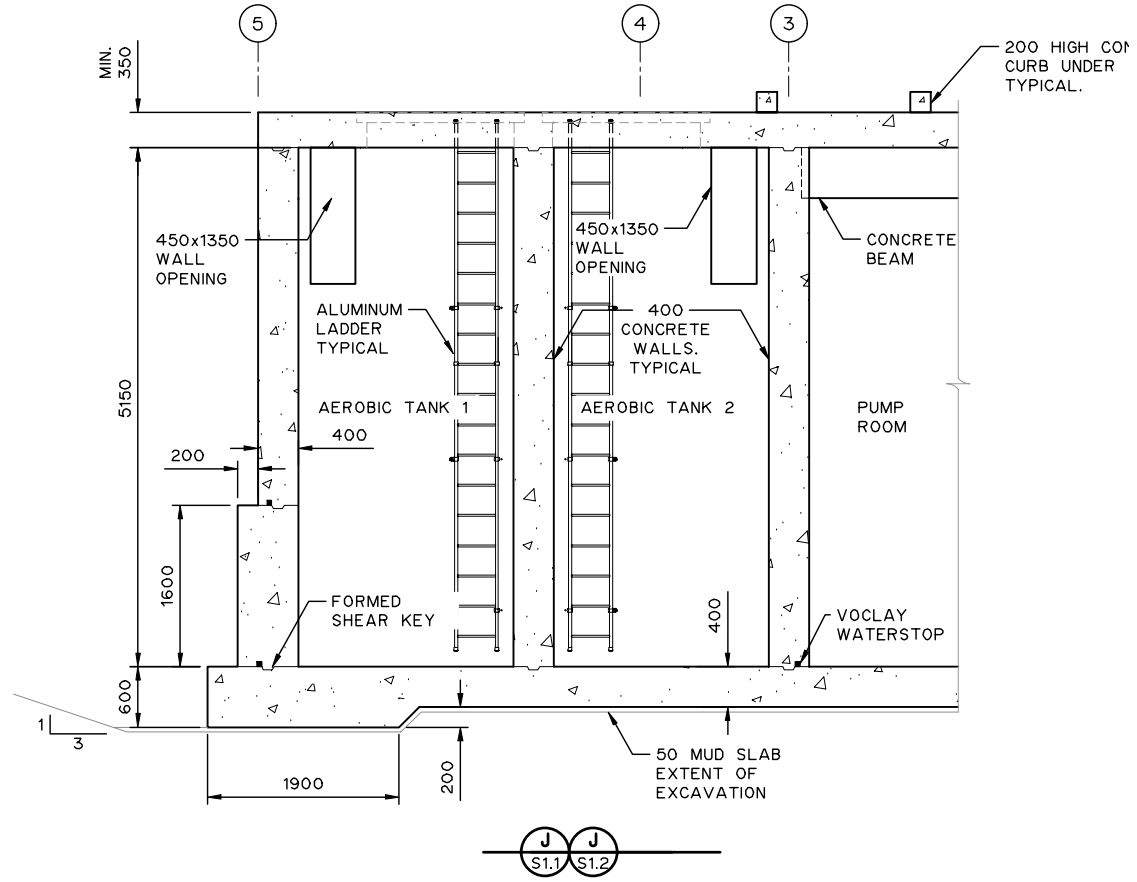

NOTES:

1. ALL DIMENSIONS ARE IN MILLIMETRES AND ELEVATIONS ARE IN METRES UNLESS NOTED OTHERWISE.
2. MUD SLAB TO EXTEND FULL WIDTH OF EXCAVATION.
3. 20 CHAMFER ALL EXPOSED CONCRETE EDGES.
4. COORDINATE ALL CAST-IN ALUMINUM COMPONENTS WITH ARCHITECTURAL.
5. COORDINATE LOCATION AND SIZE OF ALL FLOOR AND WALL PENETRATIONS WITH OTHER DISCIPLINES.
6. BOTTOM OF EXCAVATION IS TO BE REVIEWED BY GEOTECHNICAL ENGINEER PRIOR TO MUD SLAB. MUD SLAB MUST BE PLACED IMMEDIATELY FOLLOWING ENGINEER'S APPROVAL.
7. TOP SLAB MUST BE IN-PLACE IN ITS ENTIRETY PRIOR TO BACKFILLING AROUND RESERVOIR OR HYDROSTATIC PRESSURE TEST.
8. CAST-IN SLEEVE C/W LEAK PLATE FOR ALL PENETRATIONS. LEAK SEAL AND LEAK PLATE MIGHT NOT BE SHOWN IN THE DRAWING. SEE PROCESS FOR DETAIL.
9. SEE ARCHITECTURAL FOR CONCRETE FINISHES AND COATINGS.
10. SEE SPECIFICATIONS SECTION 03300 3.3.6 FOR CONDUITS AND PIPES INSTALLED IN SLAB.
11. SEE ARCHITECTURAL FOR WIDTH OF WALL CONCRETE CURBS, DISCONTINUE CURBS AT DOOR OPENINGS.

(SEE BELOW FOR CONTINUATION)

NOTES (CONT'D):

12. PROVIDE FORMED 38x89 SHEAR KEY AT ALL POUR BREAKS. PROVIDE VOCLAY WATERSTOP IN ALL CONSTRUCTION JOINTS IN EXTERIOR WALLS AND SLABS. PROVIDE VOCLAY WATERSTOP AT BOTTOM OF INTERIOR WALLS THAT SEPARATE PUMP ROOM AND ADJACENT RESERVOIRS.
13. CONTRACTOR TO ENSURE CONTINUITY OF WATERSTOPS, ESPECIALLY FROM VERTICAL TO HORIZONTAL.

THIS DRAWING MAY HAVE BEEN MODIFIED FROM ITS ORIGINAL SIZE. ALL SCALE NOTATIONS INDICATED ARE BASED ON 11"x17" FORMAT DRAWINGS

ISSUE	YY-MM-DD	REVISION
2	21-01-15	FOR CONSTRUCTION
1	20-10-15	FOR TENDER

Association of Professional Engineers & Geoscientists of Saskatchewan
CERTIFICATE OF AUTHORIZATION
MPE Engineering Ltd.
Number C1334
Permission to Consult held by:

Discipline	Sk. Reg. No.	Signature
STRUCTURAL	34196	

PROFESSIONAL ENGINEER W. SONG MEMBER 34196 2021 01 15 SASKATCHEWAN

MPE Engineering Ltd.

ENGLISH RIVER ENTERPRISES PROPERTY MANAGEMENT LP

WASTEWATER TREATMENT PLANT
STRUCTURAL
CONCRETE SECTIONS

DESIGNED	I.K., W.W.L.S.	JOB	7603-002-00
DRAWN	D.F.F.	SCALE	1:75
DATE	NOVEMBER 2020	DRAWING	S2.5

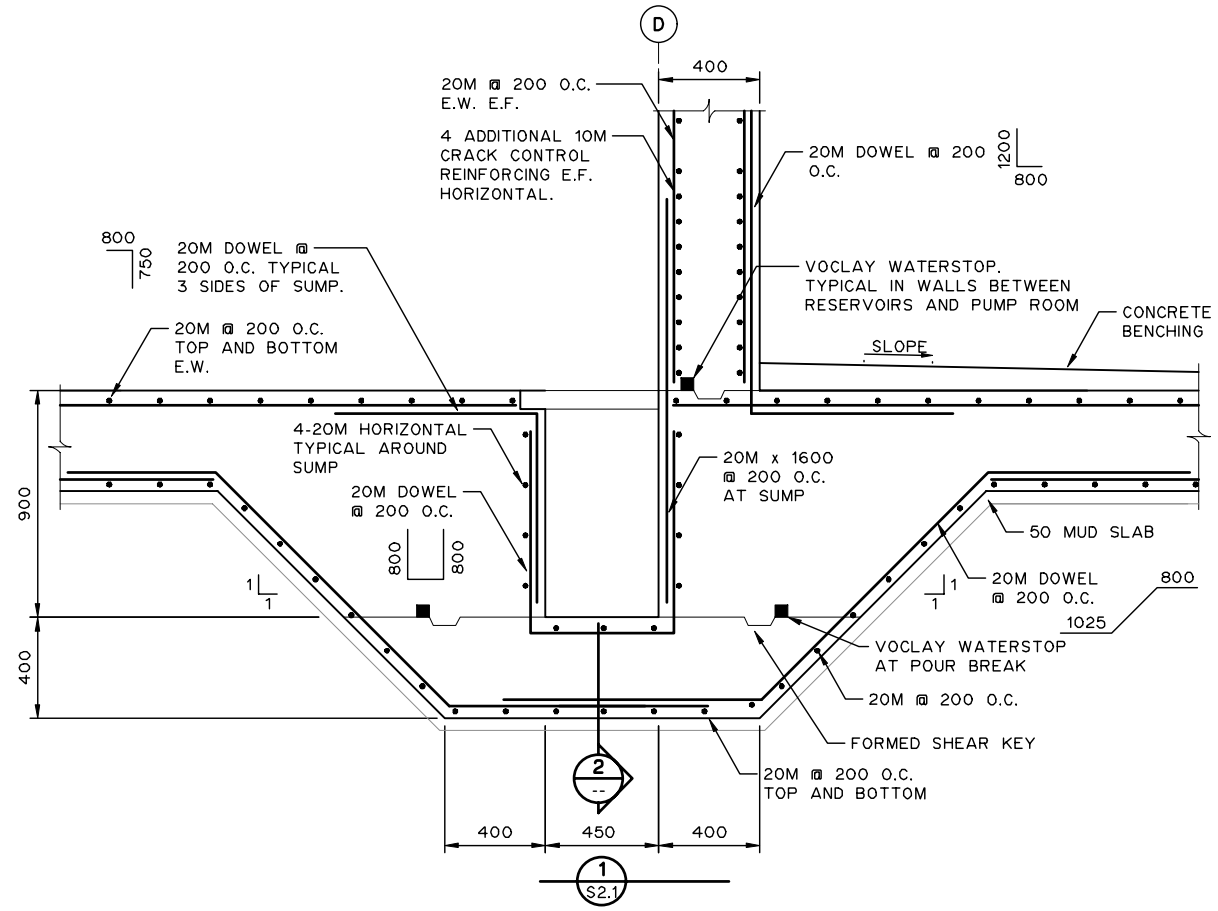

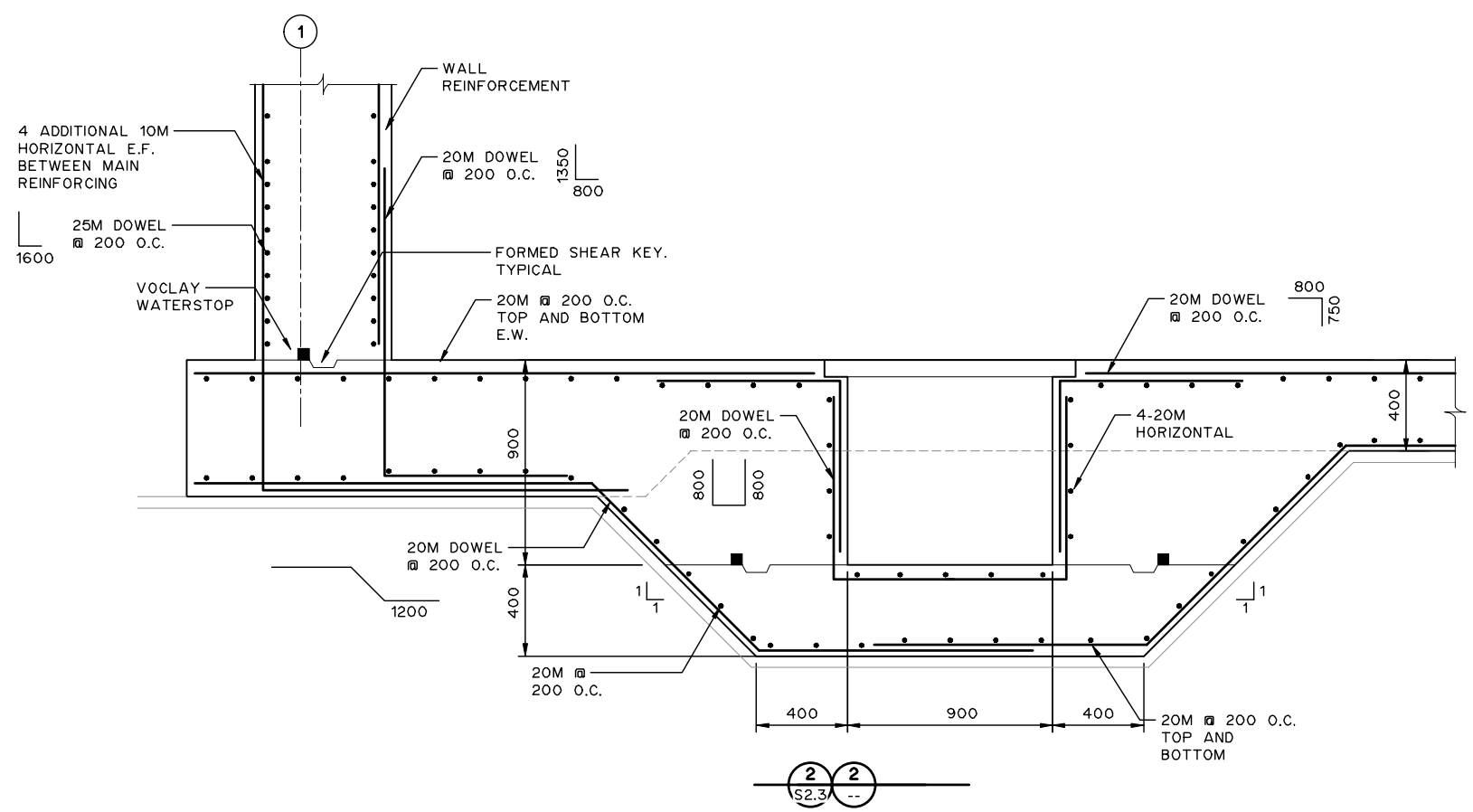

NOTES:

1. ALL DIMENSIONS ARE IN MILLIMETRES AND ELEVATIONS ARE IN METRES UNLESS NOTED OTHERWISE.
2. SEE DRAWING S4.1 FOR TYPICAL REINFORCING DETAILS.
3. 20 CHAMFER ALL EXPOSED CONCRETE EDGES.
4. COORDINATE ALL CAST-IN ALUMINUM COMPONENTS WITH ARCHITECTURAL.
5. CAST-IN SLEEVE C/W LEAK PLATE FOR ALL PENETRATIONS. LEAK SEAL AND LEAK PLATE MIGHT NOT BE SHOWN IN THE DRAWING. SEE PROCESS FOR DETAIL.
6. SEE SPECIFICATIONS SECTION 03300 3.3.6 FOR CONDUITS AND PIPES INSTALLED IN SLAB.
7. PROVIDE FORMED 38x89 SHEAR KEY AT ALL POUR BREAKS. PROVIDE VOCLAY WATERSTOP IN ALL CONSTRUCTION JOINTS IN EXTERIOR WALLS AND SLABS. PROVIDE VOCLAY WATERSTOP AT BOTTOM OF INTERIOR WALLS THAT SEPARATE PUMP ROOM AND ADJACENT RESERVOIRS.

THIS DRAWING MAY HAVE BEEN MODIFIED FROM ITS ORIGINAL SIZE. ALL SCALE NOTATIONS INDICATED ARE BASED ON 11"x17" FORMAT DRAWINGS

ISSUE	YY-MM-DD	REVISION
2	21-01-15	FOR CONSTRUCTION
1	20-10-15	FOR TENDER

Association of Professional Engineers & Geoscientists of Saskatchewan
CERTIFICATE OF AUTHORIZATION
MPE Engineering Ltd.
Number C1334
Permission to Consult held by:

Discipline	Sk. Reg. No.	Signature
STRUCTURAL	34196	

PROFESSIONAL ENGINEER W. SONG MEMBER 34196 2021 01 15 SASKATCHEWAN

MPE Engineering Ltd.

ENGLISH RIVER ENTERPRISES
PROPERTY MANAGEMENT LP

WASTEWATER TREATMENT PLANT
STRUCTURAL
REINFORCING DETAILS

DESIGNED	W.W.L.S.	JOB	7603-002-00
DRAWN	D.F.F.	SCALE	1:30
DATE	NOVEMBER 2020	DRAWING	S3.1

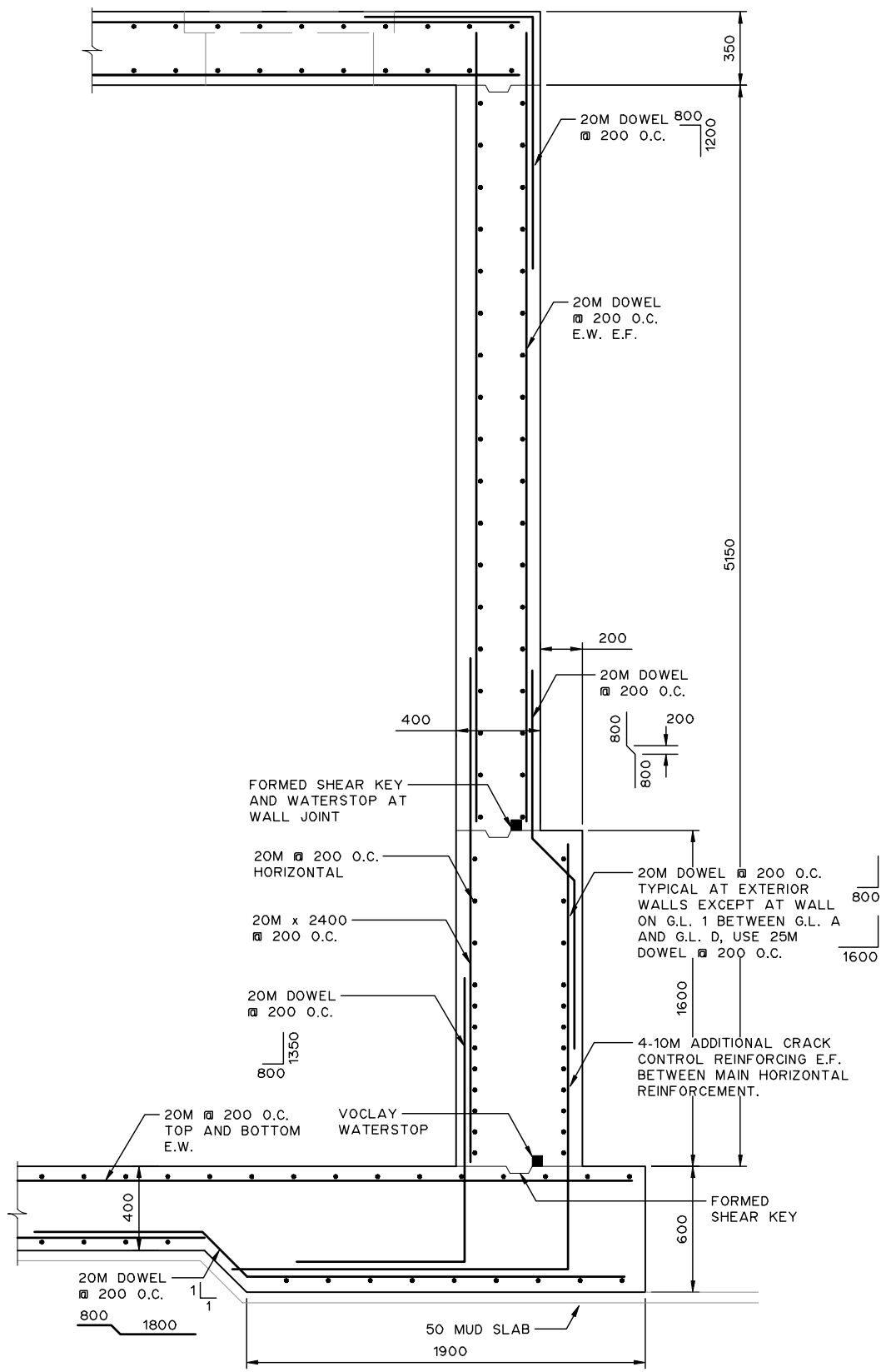

3 S2.1 TYPICAL EXTERIOR WALL DETAIL

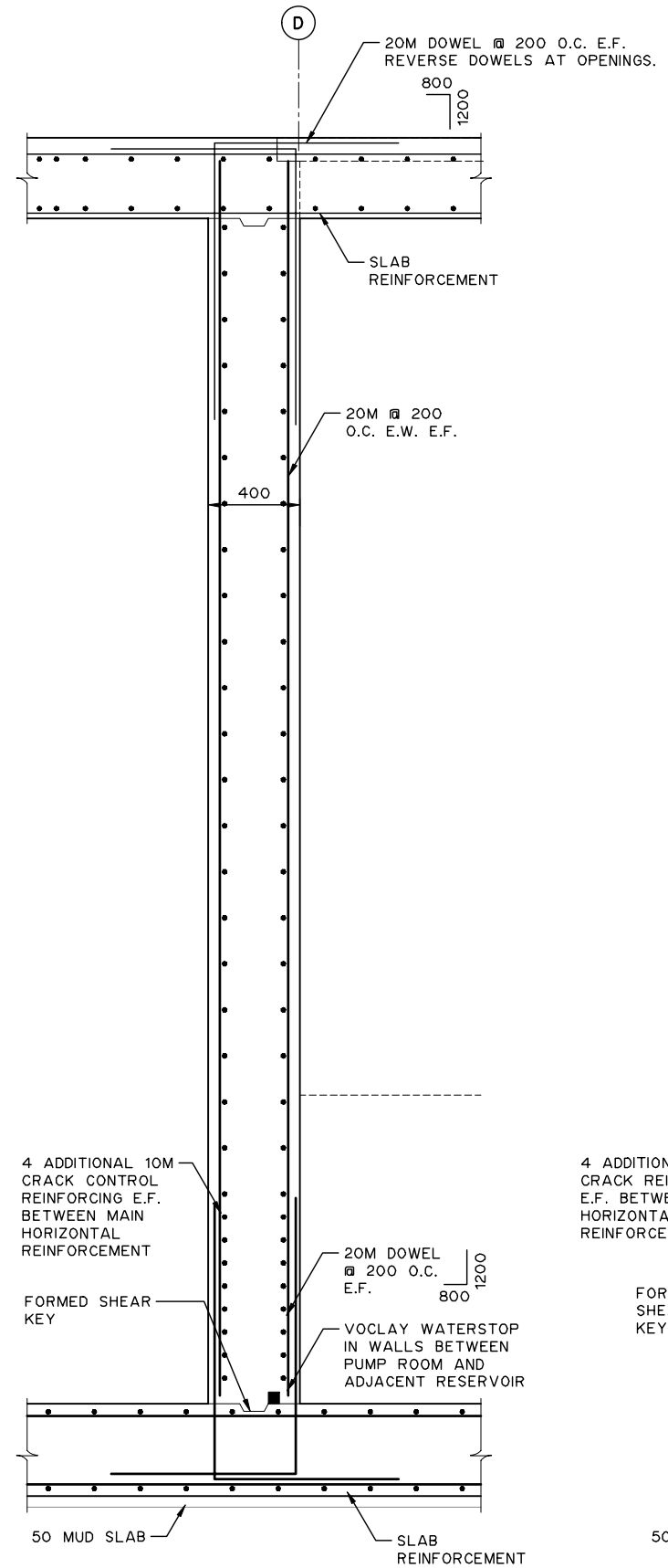

4 S2.1

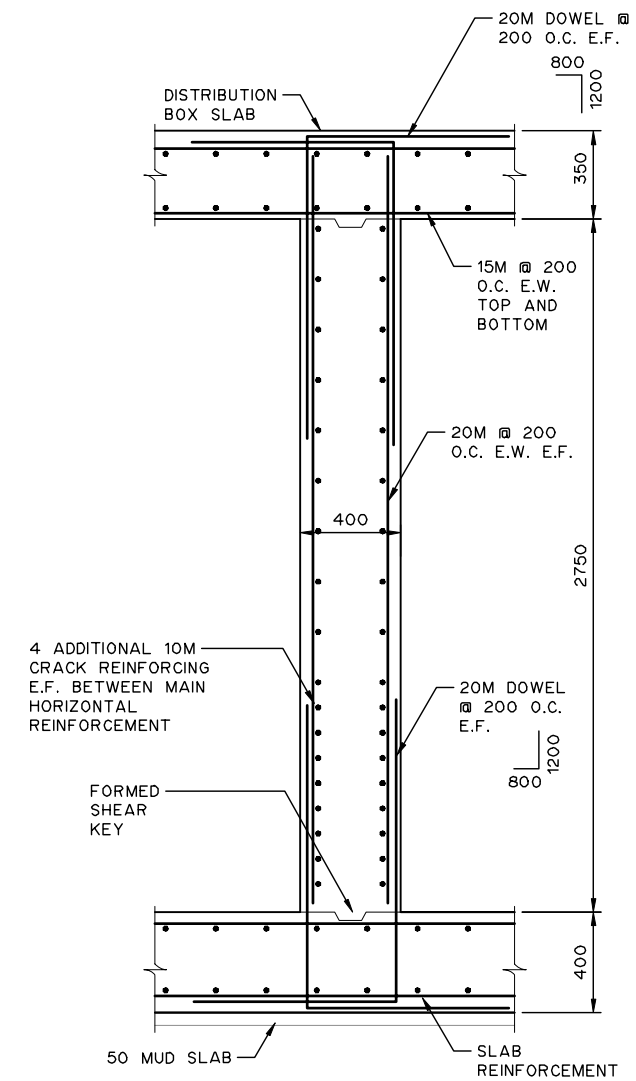

5 S2.4

NOTES:

1. ALL DIMENSIONS ARE IN MILLIMETRES AND ELEVATIONS ARE IN METRES UNLESS NOTED OTHERWISE.
2. SEE DRAWING S4.1 FOR TYPICAL REINFORCING DETAILS.
3. 20 CHAMFER ALL EXPOSED CONCRETE EDGES.
4. COORDINATE ALL CAST-IN ALUMINUM COMPONENTS WITH ARCHITECTURAL.
5. CAST-IN SLEEVE C/W LEAK PLATE FOR ALL PENETRATIONS. LEAK SEAL AND LEAK PLATE MIGHT NOT BE SHOWN IN THE DRAWING. SEE PROCESS FOR DETAIL.
6. SEE SPECIFICATIONS SECTION 03300 3.3.6 FOR CONDUITS AND PIPES INSTALLED IN SLAB.
7. PROVIDE FORMED 38x89 SHEAR KEY AT ALL POUR BREAKS. PROVIDE VOCLAY WATERSTOP IN ALL CONSTRUCTION JOINTS IN EXTERIOR WALLS AND SLABS. PROVIDE VOCLAY WATERSTOP AT BOTTOM OF INTERIOR WALLS THAT SEPARATE PUMP ROOM AND ADJACENT RESERVOIRS.

THIS DRAWING MAY HAVE BEEN MODIFIED FROM ITS ORIGINAL SIZE. ALL SCALE NOTATIONS INDICATED ARE BASED ON 11"x17" FORMAT DRAWINGS

ISSUE	YY-MM-DD	REVISION
2	21-01-15	FOR CONSTRUCTION
1	20-10-15	FOR TENDER

Association of Professional Engineers & Geoscientists of Saskatchewan
CERTIFICATE OF AUTHORIZATION
MPE Engineering Ltd.
Number C1334
Permission to Consult held by:

Discipline	Sk. Reg. No.	Signature
STRUCTURAL	34196	

PROFESSIONAL ENGINEER
W. BONG
MEMBER 34196
2021 01 15
YR. MO. DAY
SASKATCHEWAN

MPE Engineering Ltd.

ENGLISH RIVER ENTERPRISES PROPERTY MANAGEMENT LP

WASTEWATER TREATMENT PLANT
STRUCTURAL
REINFORCING DETAILS

DESIGNED	W.W.L.S.	JOB	7603-002-00
DRAWN	D.F.F.	SCALE	1:30
DATE	NOVEMBER 2020	DRAWING	S3.2

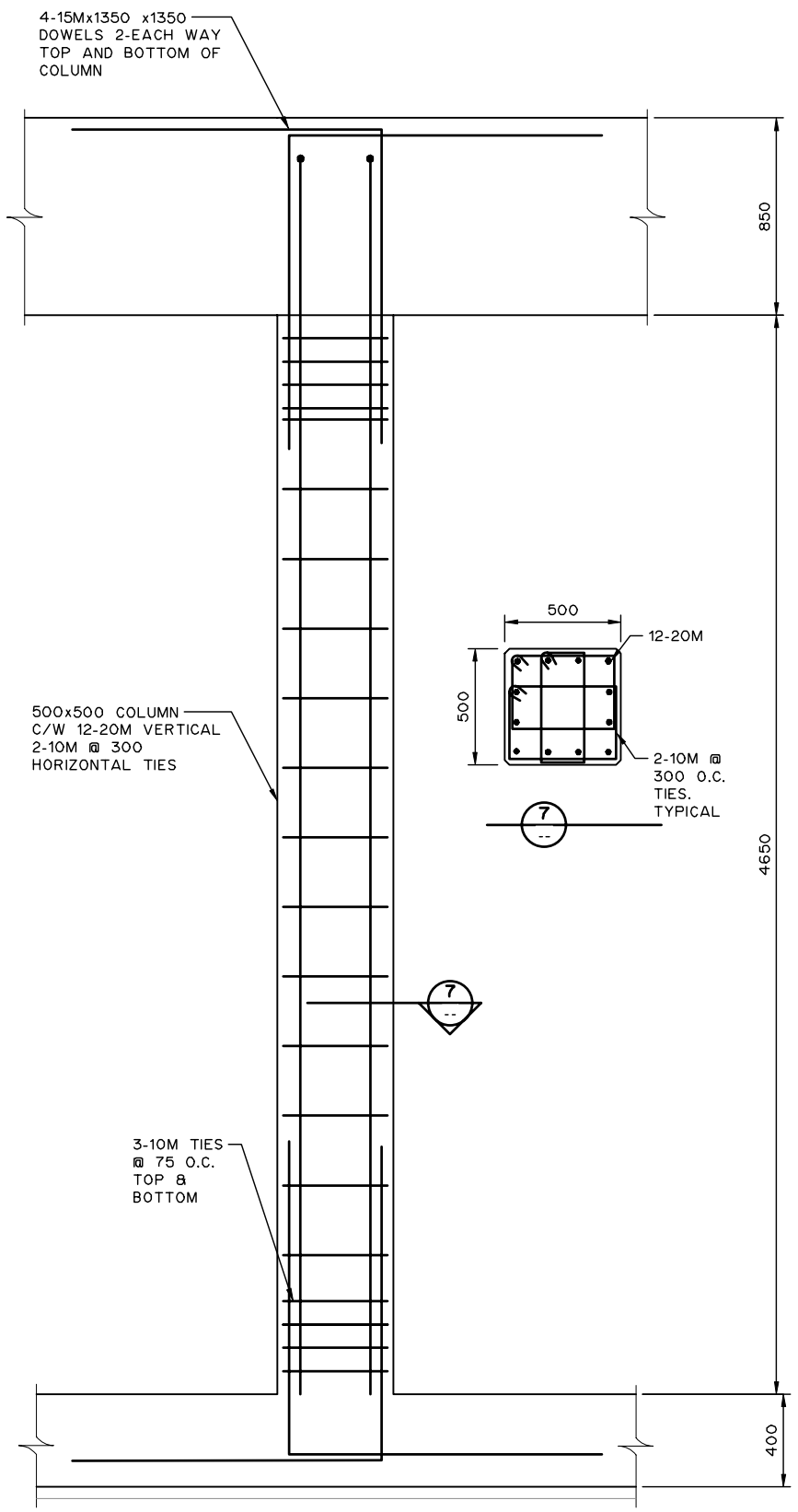

6 S2.1 CONCRETE COLUMN REINFORCING

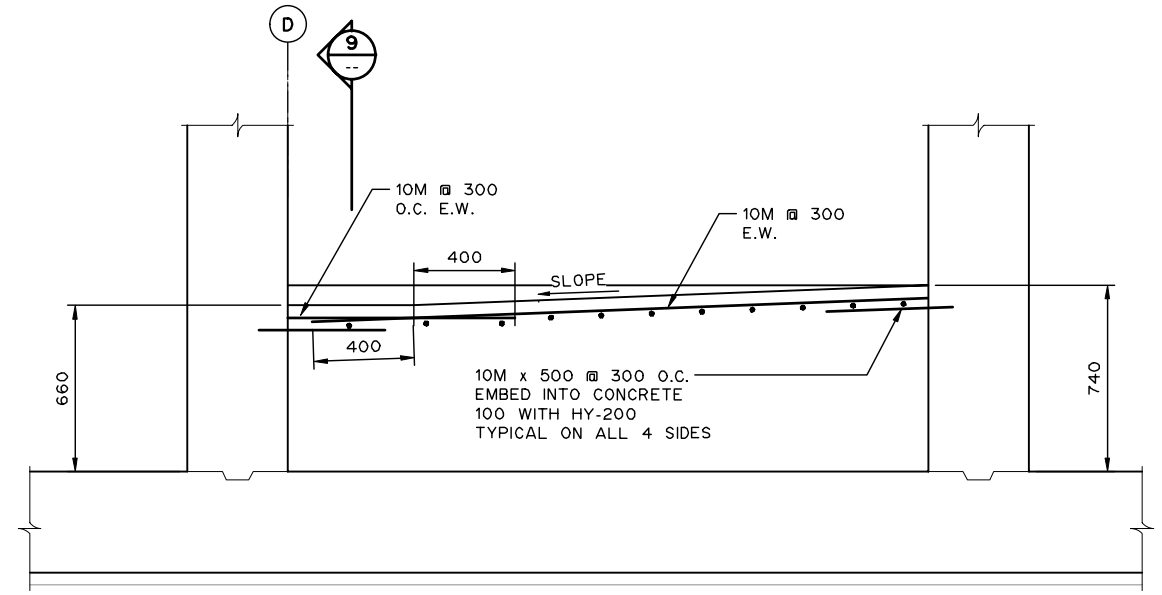

8 S2.2 TYPICAL MEMBRANE TRAIN BENCHING REINFORCEMENT

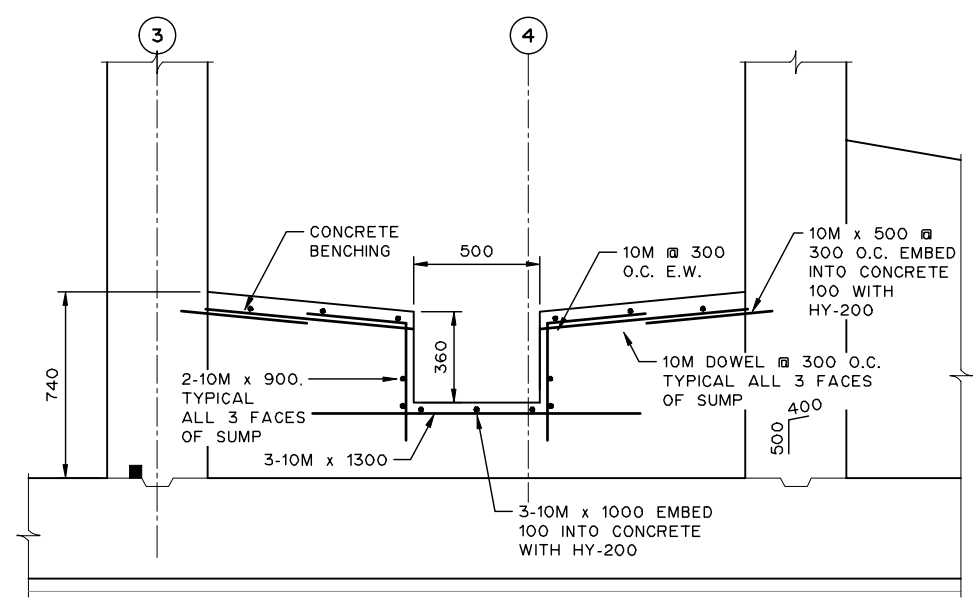

9 S2.3 9 --

NOTES:

1. ALL DIMENSIONS ARE IN MILLIMETRES AND ELEVATIONS ARE IN METRES UNLESS NOTED OTHERWISE.
2. SEE DRAWING S4.1 FOR TYPICAL REINFORCING DETAILS.
3. 20 CHAMFER ALL EXPOSED CONCRETE EDGES.
4. COORDINATE ALL CAST-IN ALUMINUM COMPONENTS WITH ARCHITECTURAL.
5. CAST-IN SLEEVE C/W LEAK PLATE FOR ALL PENETRATIONS. LEAK SEAL AND LEAK PLATE MIGHT NOT BE SHOWN IN THE DRAWING. SEE PROCESS FOR DETAIL.
6. SEE SPECIFICATIONS SECTION 03300 3.3.6 FOR CONDUITS AND PIPES INSTALLED IN SLAB.
7. PROVIDE FORMED 38x89 SHEAR KEY AT ALL POUR BREAKS. PROVIDE VOCLAY WATERSTOP IN ALL CONSTRUCTION JOINTS IN EXTERIOR WALLS AND SLABS. PROVIDE VOCLAY WATERSTOP AT BOTTOM OF INTERIOR WALLS THAT SEPARATE PUMP ROOM AND ADJACENT RESERVOIRS.

THIS DRAWING MAY HAVE BEEN MODIFIED FROM ITS ORIGINAL SIZE. ALL SCALE NOTATIONS INDICATED ARE BASED ON 11"x17" FORMAT DRAWINGS

ISSUE	YY-MM-DD	REVISION
2	21-01-15	FOR CONSTRUCTION
1	20-10-15	FOR TENDER

Association of Professional Engineers & Geoscientists of Saskatchewan
CERTIFICATE OF AUTHORIZATION
MPE Engineering Ltd.
Number C1334
Permission to Consult held by:

Discipline	Sk. Reg. No.	Signature
STRUCTURAL	34196	

PROFESSIONAL ENGINEER W. SONG MEMBER 34196 2021 01 15 SASKATCHEWAN

MPE Engineering Ltd.

ENGLISH RIVER ENTERPRISES
PROPERTY MANAGEMENT LP

WASTEWATER TREATMENT PLANT
STRUCTURAL
REINFORCING DETAILS

DESIGNED	W.W.L.S.	JOB	7603-002-00
DRAWN	D.F.F.	SCALE	1:30
DATE	NOVEMBER 2020	DRAWING	S3.3

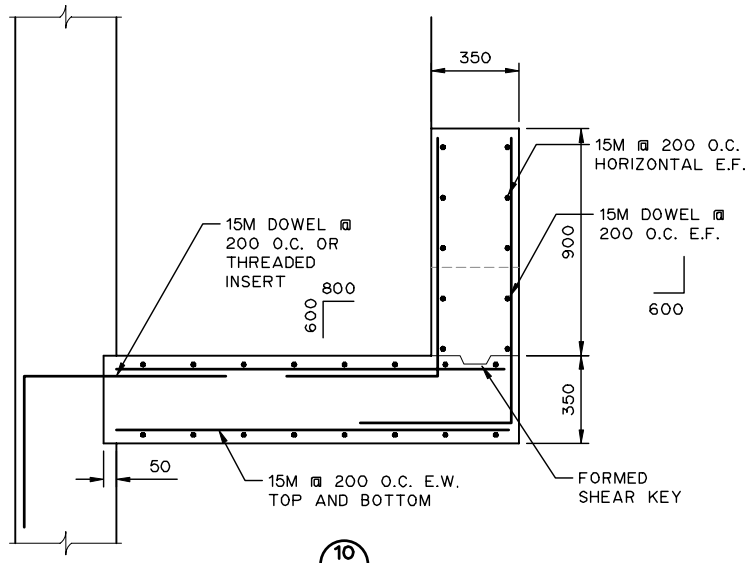

10 S2.2

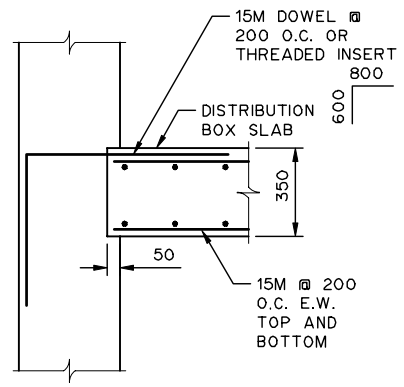

11 S2.4

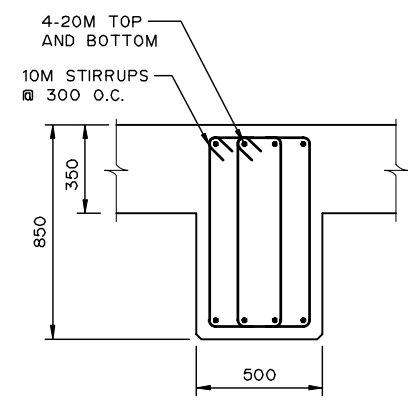

12 S2.1 TYPICAL FLOOR BEAM REINFORCING

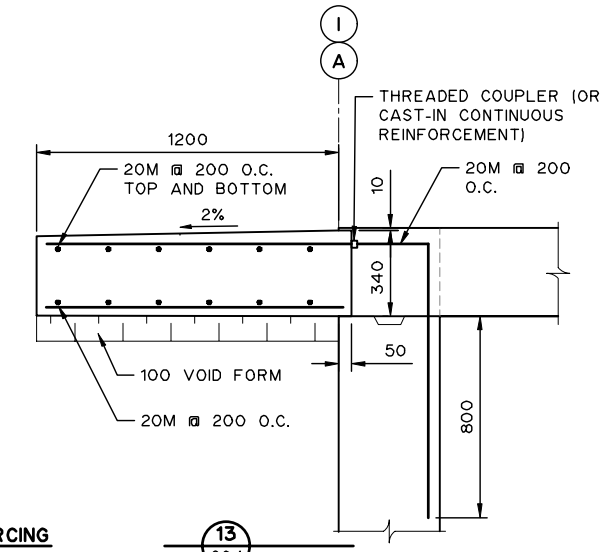

13 S2.1

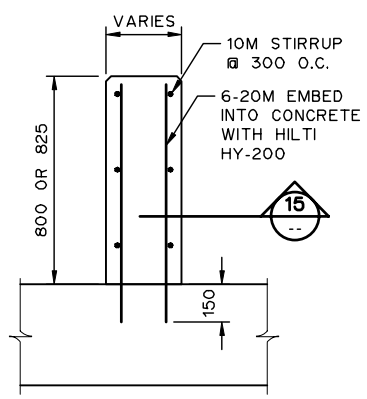

14 S2.1 14 S2.3

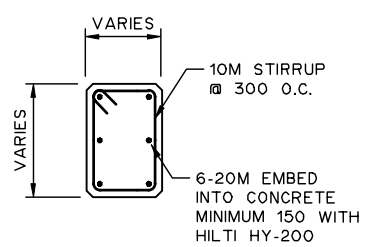

15 --

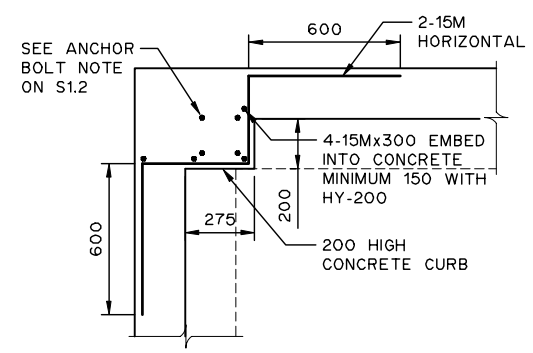

16 S1.2

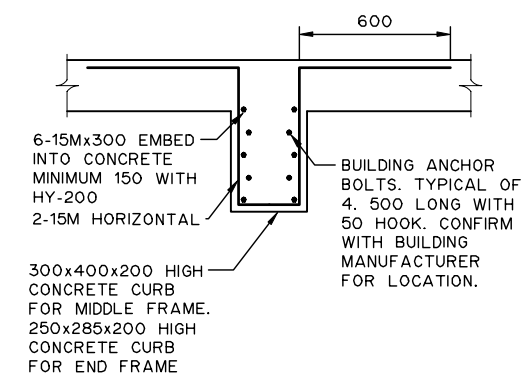

17 S1.2

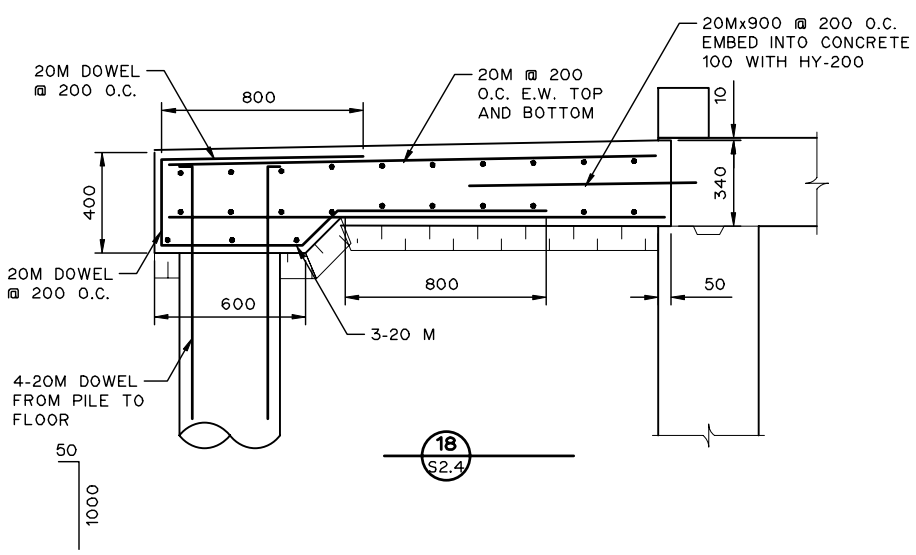

18 S2.4

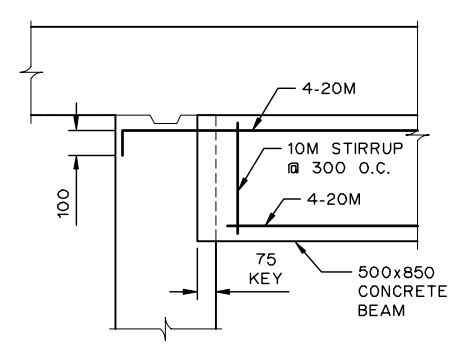

19 S2.5

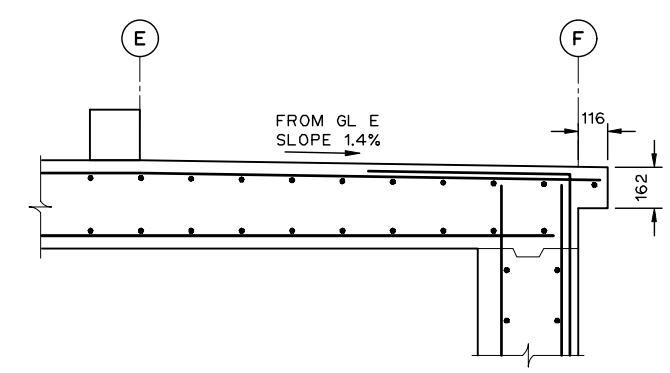

20 S2.2

NOTES:

1. ALL DIMENSIONS ARE IN MILLIMETRES AND ELEVATIONS ARE IN METRES UNLESS NOTED OTHERWISE.
2. SEE DRAWING S4.1 FOR TYPICAL REINFORCING DETAILS.
3. 20 CHAMFER ALL EXPOSED CONCRETE EDGES.
4. COORDINATE ALL CAST-IN ALUMINUM COMPONENTS WITH ARCHITECTURAL.
5. CAST-IN SLEEVE C/W LEAK PLATE FOR ALL PENETRATIONS. LEAK SEAL AND LEAK PLATE MIGHT NOT BE SHOWN IN THE DRAWING. SEE PROCESS FOR DETAIL.
6. SEE SPECIFICATIONS SECTION 03300 3.3.6 FOR CONDUITS AND PIPES INSTALLED IN SLAB.
7. PROVIDE FORMED 38x89 SHEAR KEY AT ALL POUR BREAKS. PROVIDE VOCLAY WATERSTOP IN ALL CONSTRUCTION JOINTS IN EXTERIOR WALLS AND SLABS. PROVIDE VOCLAY WATERSTOP AT BOTTOM OF INTERIOR WALLS THAT SEPARATE PUMP ROOM AND ADJACENT RESERVOIRS.

THIS DRAWING MAY HAVE BEEN MODIFIED FROM ITS ORIGINAL SIZE. ALL SCALE NOTATIONS INDICATED ARE BASED ON 11"x17" FORMAT DRAWINGS

ISSUE	YY-MM-DD	REVISION
2	21-01-15	FOR CONSTRUCTION
1	20-10-15	FOR TENDER

Association of Professional Engineers & Geoscientists of Saskatchewan
CERTIFICATE OF AUTHORIZATION
MPE Engineering Ltd.
Number C1334
Permission to Consult held by:

Discipline	Sk. Reg. No.	Signature
STRUCTURAL	34196	

PROFESSIONAL ENGINEER W. SONG MEMBER 34196 2021 01 15 YY MM DD SASKATCHEWAN

MPE Engineering Ltd.

ENGLISH RIVER ENTERPRISES PROPERTY MANAGEMENT LP

WASTEWATER TREATMENT PLANT
STRUCTURAL
REINFORCING DETAILS

DESIGNED	W.W.L.S.	JOB	7603-002-00
DRAWN	D.F.F.	SCALE	1:30
DATE	NOVEMBER 2020	DRAWING	S3.4

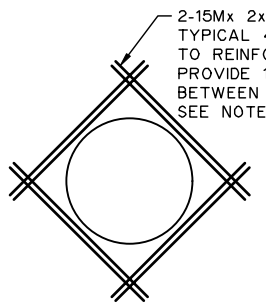

TYPICAL ROUND OPENING REINFORCING
NTS

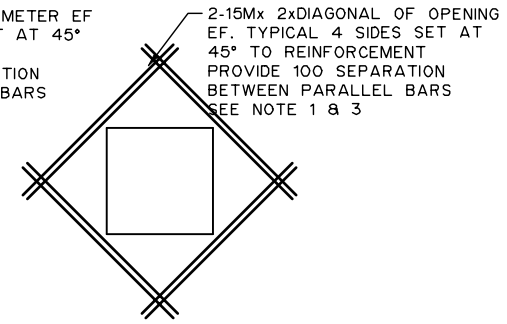

TYPICAL SQUARE OPENING REINFORCING
NTS

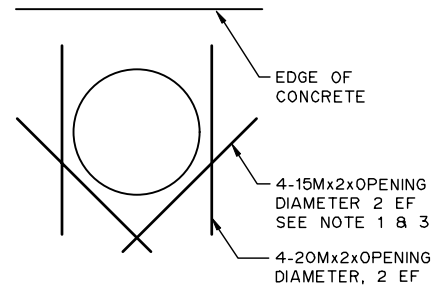

TYPICAL ROUND OPENING FOR EDGE CONDITIONS
NTS

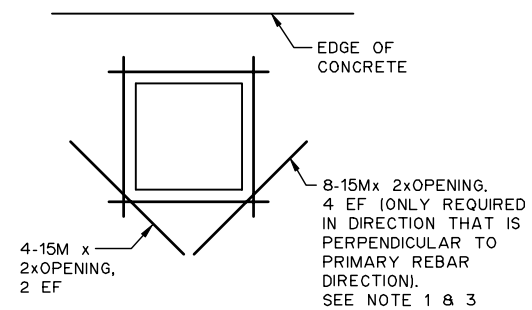

TYPICAL SQUARE OPENING REINFORCING FOR EDGE CONDITIONS
NTS

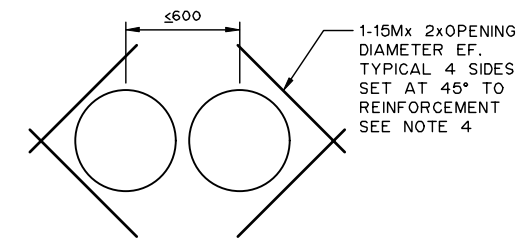

TYPICAL COMBINED OPENING REINFORCING
NTS

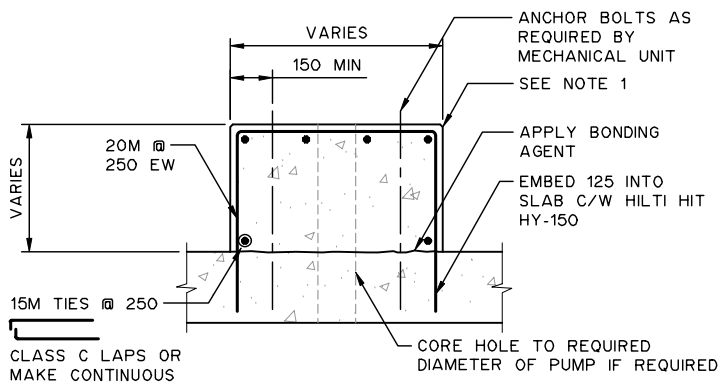

TYPICAL CAST IN PLACE PUMP BASE
NTS

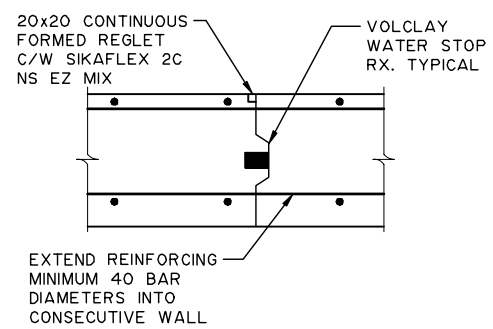

TYPICAL SLAB CONSTRUCTION JOINT
NTS

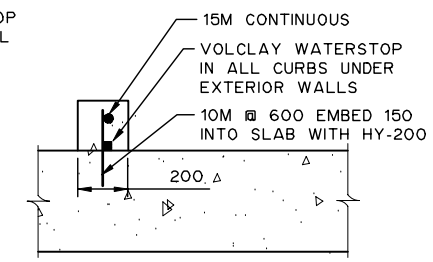

TYPICAL 200 HIGH CURB
NTS

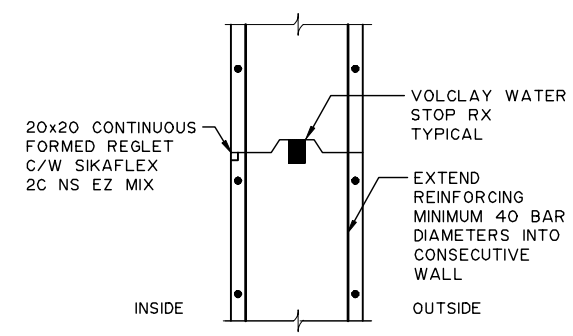

TYPICAL VERTICAL WALL/CURB CONSTRUCTION JOINT
NTS

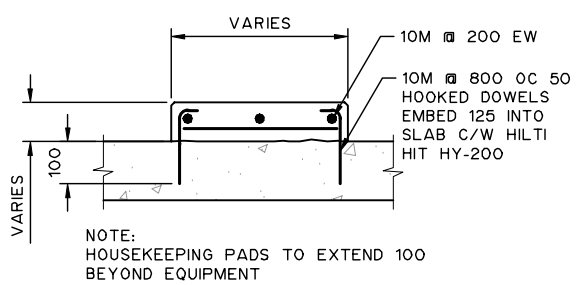

TYPICAL HOUSEKEEPING PAD
NTS

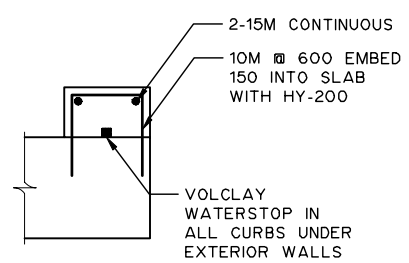

TYPICAL 340x200 HIGH CURB
NTS

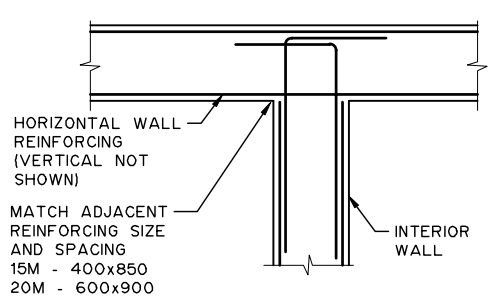

TYPICAL TANK WALL INTERSECTION
NTS

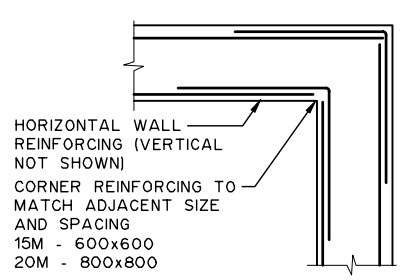

TYPICAL CORNER DETAIL
NTS

NOTES:

1. FOR EACH BAR INTERRUPTED BY OPENING, IN THE PRIMARY REBAR DIRECTION ADD BAR TO EITHER SIDE OF OPENING. TYPICAL TOP AND BOTTOM. ALLOW MINIMUM 40 SPACING BETWEEN BARS, TYPICAL FOR ALL OPENINGS.
2. 20 CHAMFER ALL EXPOSED CONCRETE EDGES.
3. TYPICAL REINFORCING DETAILS FOR OPENINGS APPLY TO ALL OPENINGS GREATER OR EQUAL TO 150Φ FOR SLAB, 150Φ FOR WALLS, OR WHEN REINFORCEMENT INTERSECTS AN OPENING.
4. FOR OPENINGS THAT ARE SPACED CLOSER THAN OR EQUAL TO 600, PROVIDE OPENING REINFORCING AS IF IT IS ONE PENETRATION.

THIS DRAWING MAY HAVE BEEN MODIFIED FROM ITS ORIGINAL SIZE. ALL SCALE NOTATIONS INDICATED ARE BASED ON 11"x17" FORMAT DRAWINGS

ISSUE	YY-MM-DD	REVISION
2	21-01-15	FOR CONSTRUCTION
1	20-10-15	FOR TENDER

Association of Professional Engineers & Geoscientists of Saskatchewan
CERTIFICATE OF AUTHORIZATION
MPE Engineering Ltd.
Number C1334
Permission to Consult held by:

Discipline	Sk. Reg. No.	Signature
STRUCTURAL	34196	

PROFESSIONAL ENGINEER W. SONG MEMBER 34196 2021 01 15 SASKATCHEWAN

MPE Engineering Ltd.

ENGLISH RIVER ENTERPRISES PROPERTY MANAGEMENT LP

WASTEWATER TREATMENT PLANT
STRUCTURAL
DETAILS

DESIGNED	W.W.L.S.	JOB	7603-002-00
DRAWN	D.F.F.	SCALE	1:30
DATE	NOVEMBER 2020	DRAWING	S4.1

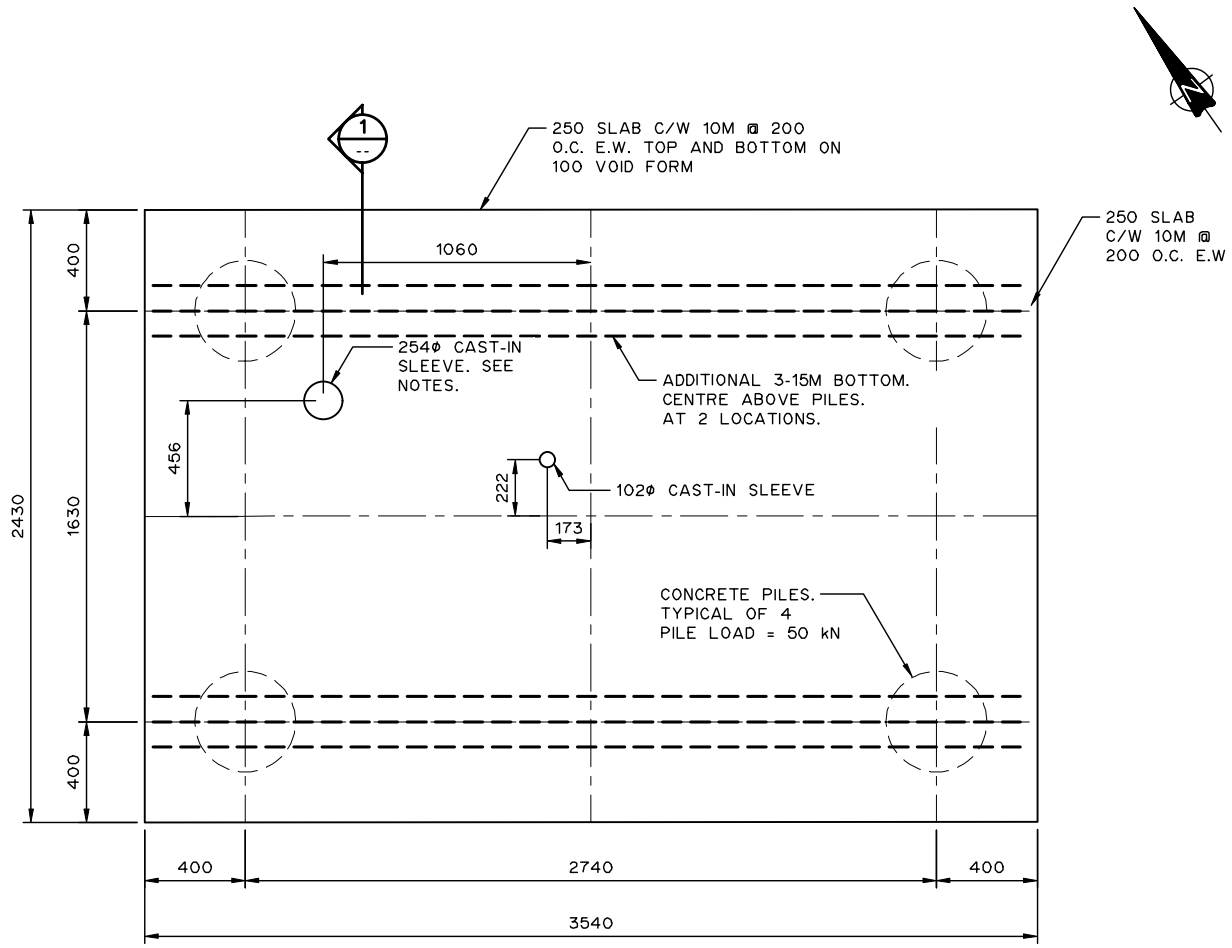

SEPTAGE RECEIVING STATION BUILDING SLAB PLAN

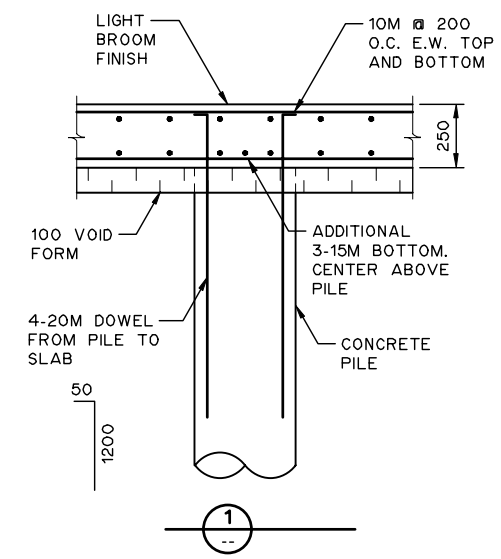

NOTES:

1. ALL DIMENSIONS ARE IN MILLIMETRES AND ELEVATIONS ARE IN METRES UNLESS NOTED OTHERWISE.
2. 20 CHAMFER EXPOSED CONCRETE EDGES.
3. SEE CIVIL FOR LOCATION OF BUILDING AND SLAB.
4. CONTRACTOR TO COORDINATE LOCATION AND PROVIDE CONCRETE PENETRATIONS FOR PIPING AND CONDUIT AS REQUIRED BY SEPTAGE STATION MANUFACTURER AND SUPPLIER.
5. CONTRACTOR TO PROVIDE ALL BUILDING ANCHORAGE TO CONCRETE SLAB AS PER MANUFACTURERS REQUIREMENTS.

THIS DRAWING MAY HAVE BEEN MODIFIED FROM ITS ORIGINAL SIZE. ALL SCALE NOTATIONS INDICATED ARE BASED ON 11"x17" FORMAT DRAWINGS

ISSUE	YY-MM-DD	REVISION
2	21-01-15	FOR CONSTRUCTION
1	20-10-15	FOR TENDER

Association of Professional Engineers & Geoscientists of Saskatchewan
CERTIFICATE OF AUTHORIZATION
MPE Engineering Ltd.
Number C1334
Permission to Consult held by:

Discipline	Sk. Reg. No.	Signature
STRUCTURAL	34196	

PROFESSIONAL ENGINEER
W. SONG
MEMBER 34196
2021 01 15
SASKATCHEWAN

MPE Engineering Ltd.

ENGLISH RIVER ENTERPRISES
PROPERTY MANAGEMENT LP

WASTEWATER TREATMENT PLANT
STRUCTURAL
SEPTAGE RECEIVING STATION
BUILDING SLAB AND FOUNDATION

DESIGNED	W.W.L.S.	JOB	7603-002-00
DRAWN	D.F.F.	SCALE	1:30
DATE	NOVEMBER 2020	DRAWING	S5.1

GENERAL EQUIPMENT

- PROPOSED
- EQUIPMENT TO BE REMOVED
- EXISTING
- MARKER DENOTING EXTENT OF WORK TO EXISTING SYSTEMS

PLUMBING

- G — NATURAL GAS
- DCW — DOMESTIC COLD WATER
- DHW — DOMESTIC HOT WATER
- DHWR — DOMESTIC HOT WATER RETURN
- W — WATER SERVICE
- SAN — BELOW GRADE SANITARY
- SAN — ABOVE GRADE SANITARY
- STM — BELOW GRADE STORM
- STM — ABOVE GRADE STORM
- F — FIRE PROTECTION
- DR — DRAIN LINE
- CA — COMPRESSED AIR
- V — SANITARY VENT
- WEEPING TILE

HEATING

- HWS — HEATING WATER SUPPLY
- HWR — HEATING WATER RETURN
- GLS — GLYCOL SUPPLY
- GLR — GLYCOL RETURN

COOLING

- CHWS — CHILLED WATER SUPPLY
- CHWR — CHILLED WATER RETURN
- CWS — CONDENSER WATER SUPPLY
- CWR — CONDENSER WATER RETURN
- R — REFRIGERANT PIPE

GENERAL PIPING

- PIPE DROP
- PIPE RISE
- OFFSET DOWN
- BOTTOM TAKE-OFF
- TOP TAKE-OFF
- TEE CONNECTION
- CAP
- BLOW OFF STRAINER
- CONCENTRIC REDUCER
- ECCENTRIC REDUCER
- FLANGED SPOOL PIECE
- UNION/FLANGED CONNECTION
- EJ-1 — EXPANSION JOINT
- PUMP
- PRESSURE GAUGE AND COCK
- STRAINER
- 25ø — PIPE SIZE
- DIRECTION OF FLOW
- T — TEMPERATURE SENSOR SINGLE POINT PROBE
- SENSOR AVERAGING PROBE
- AIR SEPARATOR
- AIR SCOOP
- CHEMICAL POT FEEDER
- AAV — AIR VENT

HEATING EQUIPMENT

- 2 WAY CONTROL VALVE
- 3 WAY CONTROL VALVE
- BALANCE VALVE
- CIRCUIT SETTER
- GAS COCK
- ISOLATION VALVE
- PRESSURE REDUCING VALVE
- RELIEF OR SAFETY VALVE
- AUTOMATIC FILL VALVE
- S — SOLENOID VALVE
- DP — DIFFERENTIAL PRESSURE VALVE
- STEAM TRAPS
- S — SUPERVISED VALVE
- SWING GATE CHECK VALVE
- BACK FLOW PREVENTER
- SIGHT GLASS
- MICRON FILTER
- TYPE / SIZE / KW — RADIATION TAG

PLUMBING FIXTURE

- DRINKING FOUNTAIN
- THERMOMETER
- M — METER
- FD — FLOOR DRAIN
- FFD — FUNNEL FLOOR DRAIN
- HD — HUB DRAIN
- RD — ROOF DRAIN
- RUNNING TRAP
- FIXTURE TRAP
- CLEAN-OUT
- IN FLOOR CLEANOUT
- NFHB — NON FREEZE HOSE BIBB
- SANITARY VENT

FIRE PROTECTION

- FIRE EXTINGUISHER
- FIRE EXTINGUISHER C/W SEMI RECESSED CABINET
- FHC — FIRE HOSE STATION
- FIRE DEPARTMENT SIAMESE CONNECTION
- UPRIGHT SPRINKLER
- PENDANT SPRINKLER
- CONCEALED SPRINKLER
- D — DRY PENDANT SPRINKLER
- SIDEWALL HEAD SPRINKLER
- D — SIDEWALL HEAD DRY SPRINKLER

VENTILATION DUCT WORK

- THERMAL LINING (INSULATION)
- ACOUSTICAL LINING (INSULATION)
- RECTANGULAR DUCT
- 300ø — ROUND DUCT
- 300/200 — FLAT OVAL DUCT
- FLEXIBLE DUCT CONNECTION
- BRAIDED FLEXIBLE PIPE CONNECTOR
- DOUBLE SPHERE RUBBER PIPE CONNECTOR
- VARIABLE VOLUME TERMINAL UNIT
- 100x75 75x50 — TRANSITION
- 100x75 75ø — RECTANGULAR TO ROUND TRANSITION
- TURNING VANES
- S — SMOKE DETECTORS
- DUCT REHEAT COIL
- RELIEF VENT
- CHIMNEY
- INDICATES DIRECTION OF AIR FLOW
- AIR FLOW MEASURING STATION

VENTILATION FIXTURE

- CEILING FAN
- FAN
- FN — SIDE WALL FAN
- H — DEHUMIDISTAT
- F — FREEZE-STAT
- DP — DIFFERENTIAL PRESSURE SENSOR
- T — THERMOSTAT
- T — THERMOSTAT C/W LOCKABLE COVER
- T S — THERMOSTAT C/W REMOTE TEMPERATURE SENSOR
- SUPPLY AIR DUCT
- RETURN AIR DUCT
- EXHAUST AIR DUCT
- OUTSIDE OR COMBUSTION AIR
- RETURN/EXHAUST GRILLE
- SUPPLY DIFFUSER
- ROUND SUPPLY DUCT RISER
- ROUND SUPPLY DUCT DROP
- TYPE / SIZE / L/S / QTY — AIR GRILL TAG
  - S - SUPPLY
  - R - RETURN
  - E - EXHAUST
  - T - TRANSFER
- BALANCE DAMPER
- FD — FIRE DAMPER
- M — MOTORIZED DAMPER

TAGS

- -- — FIXTURE AND EQUIPMENT TAG
- FS — FLOW SWITCH
- -- — EMCS POINT IDENTIFICATION TAG
- -- — VAV BOX IDENTIFICATION TAG
- E/P — VOLTAGE/CURRENT PRESSURE TRANSDUCER
- -- — KEY NOTES

NOTES:

1. ALL DIMENSIONS ARE IN MILLIMETRES UNLESS NOTED OTHERWISE.
2. ALL BOLD ITEMS INDICATE WORK TO BE DONE AND ALL LIGHT ITEMS INDICATE EXISTING CONDITIONS.

THE EXISTENCE, LOCATION AND ELEVATION OF ALL UTILITIES AS SHOWN ON ANY PLANS MAY BE BASED ON INFORMATION RECEIVED FROM THE RESPECTIVE AUTHORITIES AND ARE NOT GUARANTEED BY THE ENGINEER. NO RESPONSIBILITY IS IMPLIED OR ASSUMED BY THE ENGINEER AS TO THE LOCATION AND ELEVATION OR ANY OMISSIONS. THE CONTRACTOR OR ANY THIRD-PARTY IS RESPONSIBLE FOR DETERMINING THE EXISTENCE, LOCATION AND ELEVATION OF ALL SUCH UTILITIES AND MUST CONTACT THE VARIOUS UTILITY COMPANIES FOR ON SITE INFORMATION PRIOR TO COMMENCEMENT OF ANY OPERATIONS.

THIS DRAWING MAY HAVE BEEN MODIFIED FROM ITS ORIGINAL SIZE. ALL SCALE NOTATIONS INDICATED ARE BASED ON 11"x17" FORMAT DRAWINGS

ISSUE	YY-MM-DD	REVISION
2	21-01-15	FOR CONSTRUCTION
1	20-10-15	FOR TENDER

Association of Professional Engineers & Geoscientists of Saskatchewan
CERTIFICATE OF AUTHORIZATION
MPE Engineering Ltd.
Number C1334
Permission to Consult held by:

Discipline	Sk. Reg. No.	Signature
MECHANICAL	24112	

PROFESSIONAL ENGINEER — R.R. TIMSON — MEMBER 24112 — 2021-01-19 — VR. MILGAY — SASKATCHEWAN

MPE Engineering Ltd.

ENGLISH RIVER ENTERPRISES PROPERTY MANAGEMENT LP

WASTEWATER TREATMENT PLANT
MECHANICAL
LEGEND

DESIGNED	R.R.U.	JOB	7603-002-00
DRAWN	T.D.D.	SCALE	NTS
DATE	NOVEMBER 2020	DRAWING	M0.1

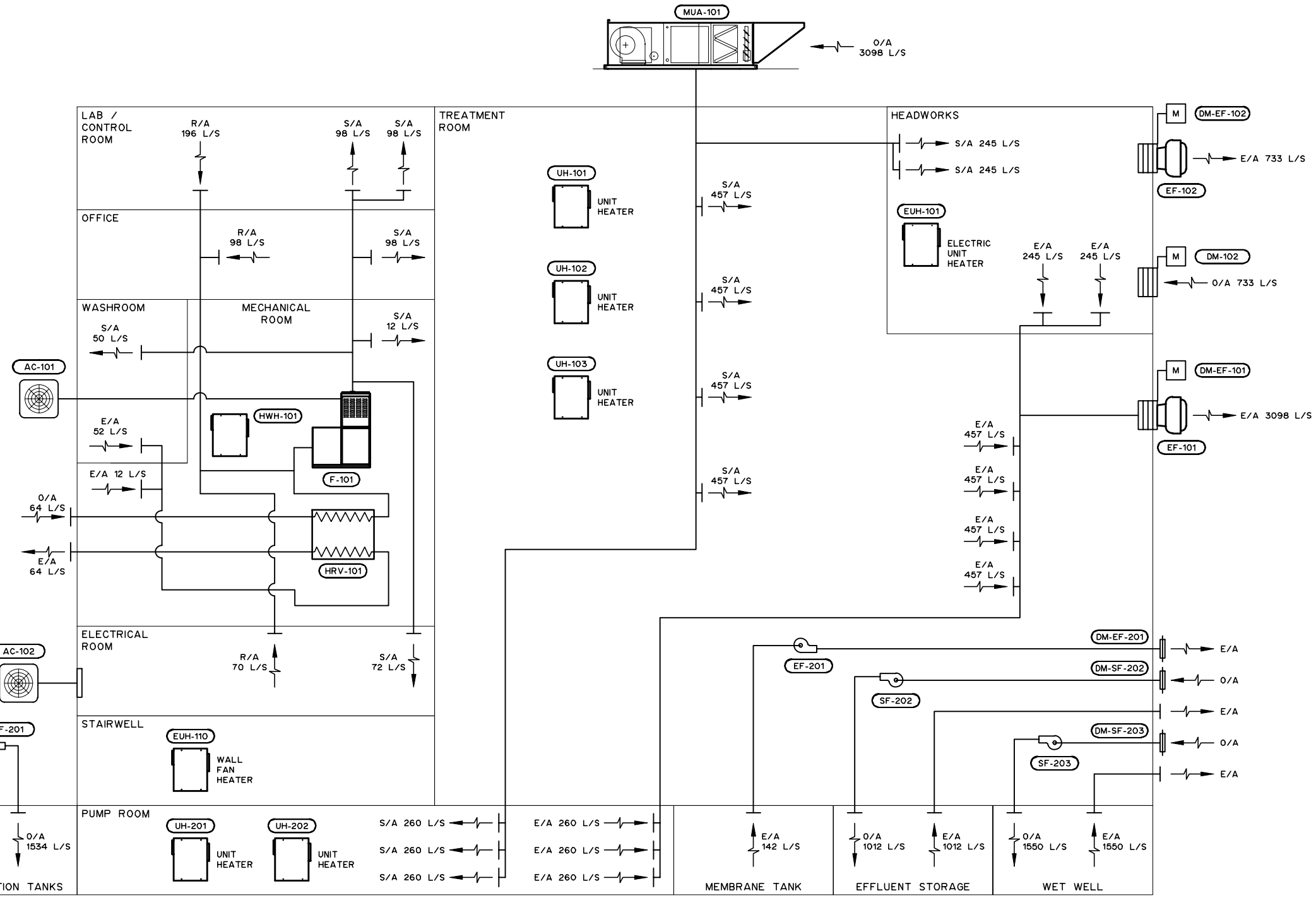

NOTES:

ABBREVIATIONS:

S/A	SUPPY AIR
E/A	EXHAUST AIR
O/A	OUTSIDE AIR
R/A	RETURN AIR

THIS DRAWING MAY HAVE BEEN MODIFIED FROM ITS ORIGINAL SIZE. ALL SCALE NOTATIONS INDICATED ARE BASED ON 11"x17" FORMAT DRAWINGS

ISSUE	YY-MM-DD	REVISION
2	21-01-15	FOR CONSTRUCTION
1	20-10-15	FOR TENDER

Association of Professional Engineers & Geoscientists of Saskatchewan
CERTIFICATE OF AUTHORIZATION
MPE Engineering Ltd.
Number C1334
Permission to Consult held by:

Discipline	Sk. Reg. No.	Signature
MECHANICAL	24112	

PROFESSIONAL ENGINEER R.R. LUSSIER MEMBER 24112 2021-01-19 VR. MALCAY SASKATCHEWAN

MPE Engineering Ltd.

ENGLISH RIVER ENTERPRISES PROPERTY MANAGEMENT LP

WASTEWATER TREATMENT PLANT

MECHANICAL

HEATING AND VENTILATION

FLOW DIAGRAM

DESIGNED	R.R.U.	JOB	7603-002-00
DRAWN	T.D.D.	SCALE	NTS
DATE	NOVEMBER 2020	DRAWING	M1.1

DESIGN CRITERIA

MUA-101
- MAKEUP AIR HANDLING UNIT
- 5.6 kW, 3100 L/S
- 600 VAC/3 PH/60 Hz

EF-101
- EXHAUST FAN
- 1.12 kW, 3100 L/S
- 600 VAC/3 PH/60 Hz

HRV-101
- HEAT RECOVERY VENTILATOR
- 0.15 kW, 64 L/s
- 120 VAC/1 PH/60 Hz

F-101
- FORCED AIR FURNACE
- 0.22 kW, 545 L/s
- 120 VAC/1 PH/60 Hz

AC-101
- CONDENSING UNIT
- 1.98 kW
- 208 VAC/1 PH/60 Hz

AC-102
- CONDENSER
- 4.68 kW
- 208 VAC/1 PH/60 Hz
- EVAPORATOR
- 0.2kW
- 208 VAC/1 PH/60 Hz

SF-202
- SUPPLY FAN
- 1.12 kW, 1012 L/S
- 208 VAC/1 PH/60 Hz

SF-203
- SUPPLY FAN
- 1.12 kW, 1550 L/S
- 208 VAC/1 PH/60 Hz

SF-201
- SUPPLY FAN
- 1.12kW, 1534 L/S
- 208 VAC/1 PH/60 Hz

HWH-101
- HOT WATER HEATER
- 120 VAC/1 PH/60 Hz

EF-102
- EXHAUST FAN
- 0.19kW, 735 L/S
- 600 VAC/3 PH/60 Hz

EUH-101
- ELECTRIC UNIT HEATER
- 15 kW
- 600 VAC/3 PH/60 Hz

EUH-110
- WALL FAN HEATER
- 4 kW
- 208 VAC/1 PH/60 Hz

UH-101/102/103/201/202
- UNIT HEATER
- 0.2 kW
- 120 VAC/1 PH/60 Hz

EF-201
- EXHAUST FAN
- 0.11 kW, 142 L/S
- 120 VAC/1 PH/60 Hz

NOTES:

1. FOR INFORMATION REGARDING GENERAL NOTES, UTILITIES, ABBREVIATIONS AND SYMBOLS, REFER TO THE LEGEND DRAWINGS.

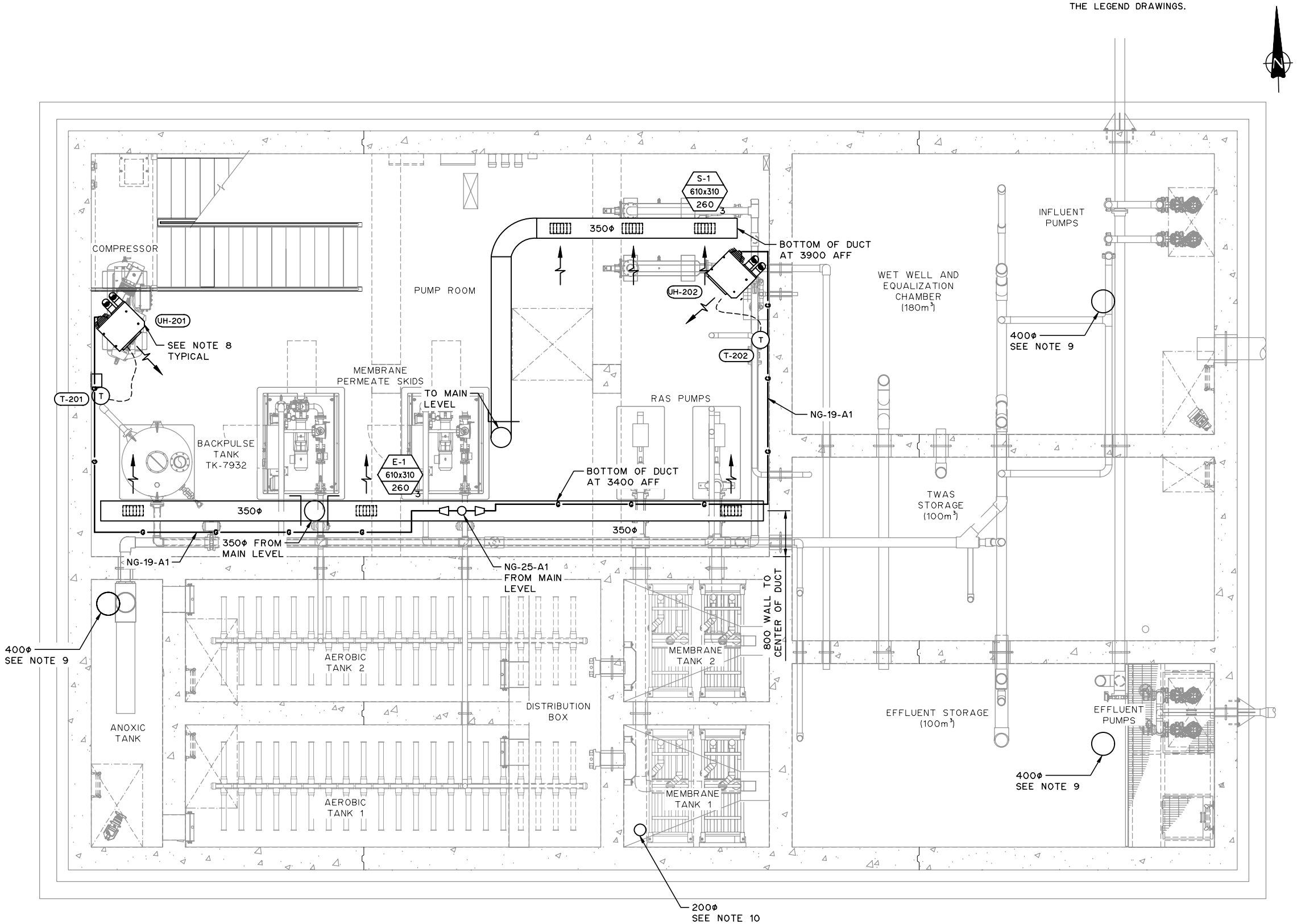

2. SUPPLY AND INSTALL MANUFACTURER'S CONCENTRIC VENT KIT.
3. EACH GAS CONNECTION TO AN APPLIANCE SHALL BE MADE WITH A UNION, ISOLATION GAS COCK AND DIRT LEG. GAS LINES TO BE SIZED TO CAN/CSA B149.1-05.
4. PROVIDE DUCTING AND MISCELLANEOUS FITTINGS WHERE REQUIRED TO PROVIDE A COMPLETE AND OPERATIONAL SYSTEM.
5. HEATING AND VENTILATION EQUIPMENT SHALL BE INSTALLED AS PER MANUFACTURER'S RECOMMENDATIONS INCLUDING MEETING ALL CLEARANCE REQUIREMENTS.
6. DRAWING IS DIAGRAMMATIC AND INDICATES INTENT ONLY. PROVIDE ALL VERTICAL AND HORIZONTAL OFFSETS NOT NECESSARILY IDENTIFIED IN THE DRAWING IN A MANNER THAT MEETS CODE REQUIREMENTS.
7. ALL DUCT AND FLUE PENETRATIONS THROUGH FIRE RATED WALLS AND CEILINGS ARE TO BE COMPLETE WITH FIRE DAMPERS AND CONFORMING ACCESS PANEL. FIRE DAMPERS ARE TO BE UL LISTED AND MANUFACTURED AS REQUIRED BY CAN/ULC-S112.2-07.
8. UNIT HEATERS TO BE INSTALLED AT 4200 ABOVE FINISHED FLOOR. COORDINATE ON SITE WITH PROCESS EQUIPMENT. SUPPLY AND INSTALL MANUFACTURER'S CONCENTRIC VENT KIT. VENT TO RUN ALONG CEILING TO NORTH WALL AND PENETRATE MAIN FLOOR SLAB. RUN VENT AS CLOSE AS POSSIBLE TO NORTH WALL.
9. PVC DUCT THROUGH FLOOR C/W LINK SEAL. DUCT TO EXTEND 50 BELOW FINISHED CEILING.
10. PVC DUCT TO EXTEND 50 BELOW GRATING.

THIS DRAWING MAY HAVE BEEN MODIFIED FROM ITS ORIGINAL SIZE. ALL SCALE NOTATIONS INDICATED ARE BASED ON 11"x17" FORMAT DRAWINGS

ISSUE	YY-MM-DD	REVISION
2	21-01-15	FOR CONSTRUCTION
1	20-10-15	FOR TENDER

Association of Professional Engineers & Geoscientists of Saskatchewan
CERTIFICATE OF AUTHORIZATION
MPE Engineering Ltd.
Number C1334
Permission to Consult held by:

Discipline	Sk. Reg. No.	Signature
MECHANICAL	24112	

PROFESSIONAL ENGINEER R.R. LINSEY MEMBER 24112 2021-01-19 SASKATCHEWAN

MPE Engineering Ltd.

ENGLISH RIVER ENTERPRISES PROPERTY MANAGEMENT LP

WASTEWATER TREATMENT PLANT
MECHANICAL - HVAC
LOWER LEVEL
PLAN

DESIGNED	R.R.U.	JOB	7603-002-00
DRAWN	T.D.D.	SCALE	1:75
DATE	NOVEMBER 2020	DRAWING	M2.1

GAS SCHEDULE	
EQUIPMENT	CONSUMPTION (m3/hr)
UH-101	2.46
UH-102	2.46
UH-103	2.46
UH-201	1.41
UH-202	1.41
MUA-101	24.11
F-101	1.70
HWH-101	2.15
TOTAL	38.16

NOTES:

1. FOR INFORMATION REGARDING GENERAL NOTES, UTILITIES, ABBREVIATIONS AND SYMBOLS, REFER TO THE LEGEND DRAWINGS.
2. SUPPLY AND INSTALL MANUFACTURER'S CONCENTRIC VENT KIT.
3. EACH GAS CONNECTION TO AN APPLIANCE SHALL BE MADE WITH A UNION, ISOLATION GAS COCK AND DIRT LEG. GAS LINES TO BE SIZED TO CAN/CSA B149.1-05.
4. PROVIDE DUCTING AND MISCELLANEOUS FITTINGS WHERE REQUIRED TO PROVIDE A COMPLETE AND OPERATIONAL SYSTEM.
5. HEATING AND VENTILATION EQUIPMENT SHALL BE INSTALLED AS PER MANUFACTURER'S RECOMMENDATIONS INCLUDING MEETING ALL CLEARANCE REQUIREMENTS.
6. DRAWING IS DIAGRAMMATIC AND INDICATES INTENT ONLY. PROVIDE ALL VERTICAL AND HORIZONTAL OFFSETS NOT NECESSARILY IDENTIFIED IN THE DRAWING IN A MANNER THAT MEETS CODE REQUIREMENTS.
7. ALL DUCT AND FLUE PENETRATIONS THROUGH FIRE RATED WALLS AND CEILINGS ARE TO BE COMPLETE WITH FIRE DAMPERS AND CONFORMING ACCESS PANEL. FIRE DAMPERS ARE TO BE UL LISTED AND MANUFACTURED AS REQUIRED BY CAN/ULC-S112.2-07.
8. UNIT HEATERS TO BE INSTALLED AT 3000 ABOVE FINISHED FLOOR. COORDINATE ON SITE WITH PROCESS EQUIPMENT.
9. INSTALL FIRE DAMPER ABOVE FLOOR TO PUMP ROOM.
10. PVC DUCT TO TANK BELOW.
11. GAS PRESSURE WILL BE 7-IN W.C. FROM UTILITY TO BUILDING. CONTRACTOR TO COORDINATE GAS SERVICE CONNECTION WITH UTILITY.
12. CONNECT 150Φ EXHAUST DUCT TO FUME HOOD.
13. SUPPLY DUCT TO BE INSTALLED BETWEEN ROOF JOISTS AND AS CLOSE TO THE SOUTH WALL AS THE ROOF PITCH ALLOWS.

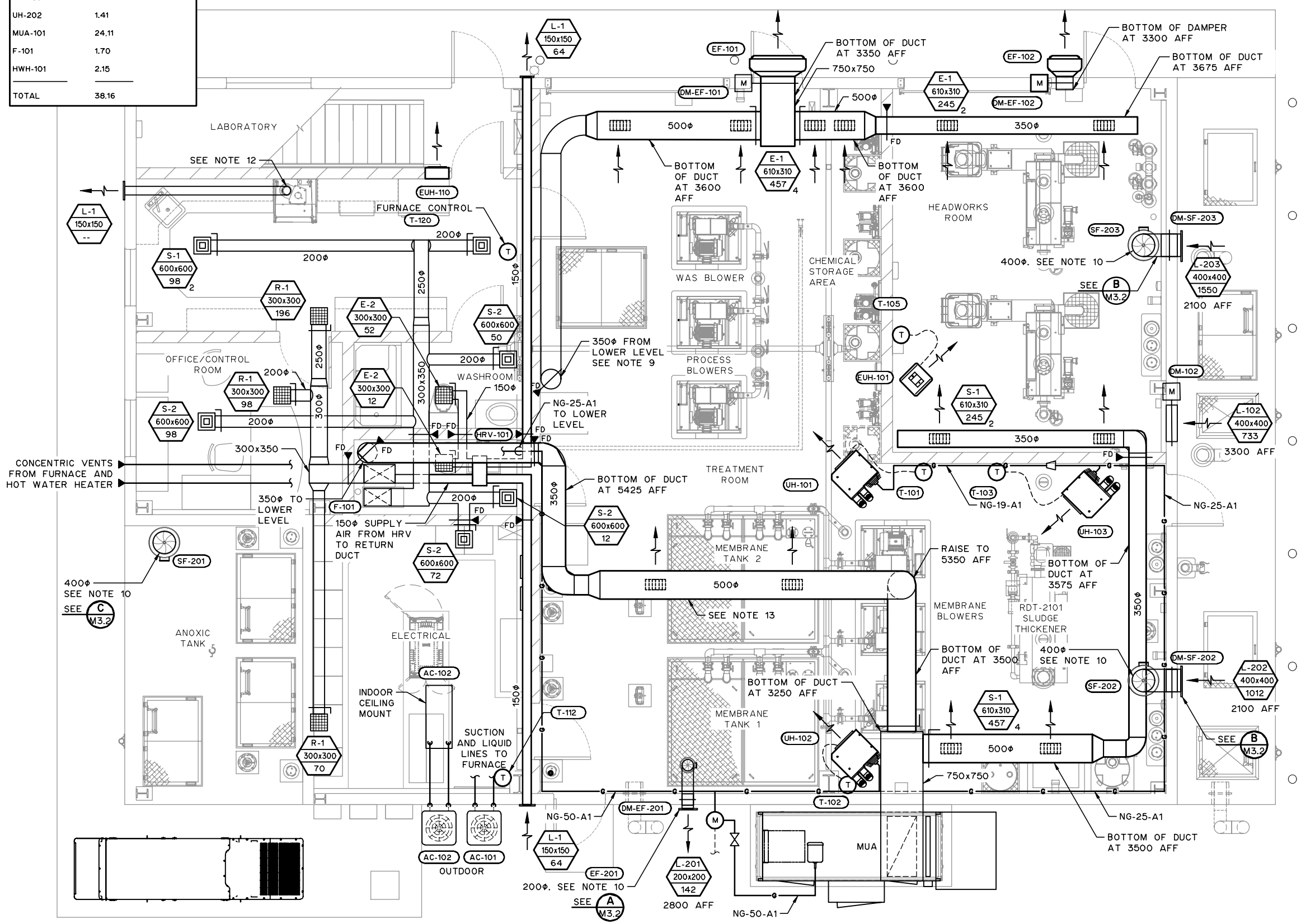

THIS DRAWING MAY HAVE BEEN MODIFIED FROM ITS ORIGINAL SIZE. ALL SCALE NOTATIONS INDICATED ARE BASED ON 11"x17" FORMAT DRAWINGS

ISSUE	YY-MM-DD	REVISION
2	21-01-15	FOR CONSTRUCTION
1	20-10-15	FOR TENDER

Association of Professional Engineers & Geoscientists of Saskatchewan
CERTIFICATE OF AUTHORIZATION
MPE Engineering Ltd.
Number C1334
Permission to Consult held by:

Discipline	Sk. Reg. No.	Signature
MECHANICAL	24112	

R.R. LUSBY MEMBER 24112 2021-01-19 VR. MILGAY PROFESSIONAL ENGINEER SASKATCHEWAN

MPE Engineering Ltd.

ENGLISH RIVER ENTERPRISES PROPERTY MANAGEMENT LP

WASTEWATER TREATMENT PLANT
MECHANICAL
HEATING AND VENTILATION
MAIN LEVEL PLAN

DESIGNED	R.R.U.	JOB	7603-002-00
DRAWN	T.D.D.	SCALE	1:75
DATE	NOVEMBER 2020	DRAWING	M2.2

NOTES:

1. FOR INFORMATION REGARDING GENERAL NOTES, UTILITIES, ABBREVIATIONS AND SYMBOLS, REFER TO THE LEGEND DRAWINGS.
2. ALL PLUMBING SHALL BE INSTALLED TO NATIONAL PLUMBING CODE REQUIREMENTS.
3. VENT ALL PLUMBING EQUIPMENT AND FIXTURES AS REQUIRED BY CODE. GROUP FIXTURE VENTS TO MINIMIZE ROOF OPENINGS.
4. 75Φ SANITARY VENT TO ATMOSPHERE. INCREASE TO 100Φ AT ROOF PENETRATION.
5. SANITARY WASTE AND DRAINAGE SYSTEM SHALL BE INSTALLED C/W SLOPES, CLEANOUTS, VENTS, TRAPS, TRAP PRIMERS, FIXTURE CONNECTIONS, ETC. TO MEET ALL CODE REQUIREMENTS.
6. ALL HUB DRAINS TO BE DR-38-E1 UNLESS NOTED OTHERWISE.
7. PLUMBING CONTRACTOR TO COORDINATE WITH STRUCTURAL CONTRACTOR TO ENSURE FLOOR SLOPES TOWARDS FLOOR DRAINS.
8. HUB DRAINS FOR PUMP SEAL FLUSH WATER TO BE INSTALLED WITHIN PUMP EQUIPMENT PAD. CONTRACTOR TO CO-ORDINATE WITH PROCESS MECHANICAL CONTRACTOR.
9. PROVIDE FIRE EXTINGUISHERS AS INDICATED ON PLANS, IN ACCORDANCE WITH NFPA 10 AND AS REQUIRED BY AUTHORITY HAVING JURISDICTION. EXTINGUISHERS TO BE 4.5kg ABC C/W WALL MOUNTING BRACKETS.
10. ALL SANITARY PIPING IN LOWER LEVEL TO BE CAST-IN PLACE. CAST-IN PLACE SANITARY PIPING IS TO BE LOCATED BETWEEN THE MATS OF STRUCTURAL STEEL.
11. ALL SANITARY PIPING LOCATED IN THE UPPER LEVEL IS TO BE BELOW THE STRUCTURAL SLAB. SANITARY PIPING IS TO BE SUPPORTED FROM HANGERS INSTALLED IN THE STRUCTURAL SLAB AND BEDDED IN PEA GRAVEL.
12. DRAWING IS DIAGRAMMATIC AND INDICATES INTENT ONLY.

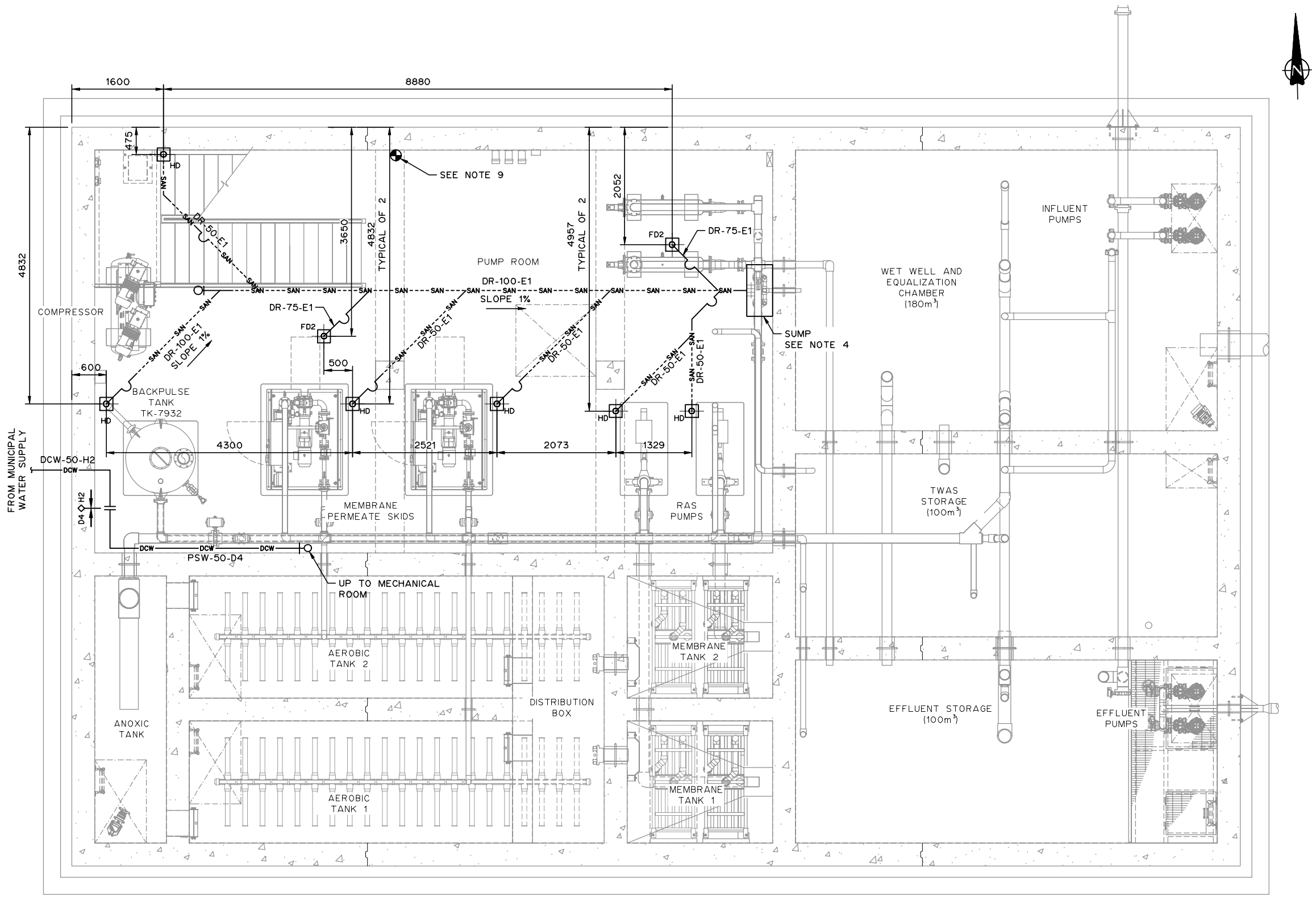

THIS DRAWING MAY HAVE BEEN MODIFIED FROM ITS ORIGINAL SIZE. ALL SCALE NOTATIONS INDICATED ARE BASED ON 11"x17" FORMAT DRAWINGS

ISSUE	YY-MM-DD	REVISION
2	21-01-15	FOR CONSTRUCTION
1	20-10-15	FOR TENDER

Association of Professional Engineers & Geoscientists of Saskatchewan
CERTIFICATE OF AUTHORIZATION
MPE Engineering Ltd.
Number C1334
Permission to Consult held by:

Discipline	Sk. Reg. No.	Signature
MECHANICAL	24112	

PROFESSIONAL ENGINEER
R.R. LINSEY
MEMBER 24112
2021-01-19
YR. MO. DAY
SASKATCHEWAN

MPE Engineering Ltd.

ENGLISH RIVER ENTERPRISES PROPERTY MANAGEMENT LP

WASTEWATER TREATMENT PLANT
MECHANICAL
PLUMBING, FIRE PROTECTION AND SANITARY
LOWER LEVEL PLAN

DESIGNED	R.R.U.	JOB	7603-002-00
DRAWN	T.D.D.	SCALE	1:75
DATE	NOVEMBER 2020	DRAWING	M2.3

NOTES:

1. FOR INFORMATION REGARDING GENERAL NOTES, UTILITIES, ABBREVIATIONS AND SYMBOLS, REFER TO THE LEGEND DRAWINGS.
2. ALL PLUMBING SHALL BE INSTALLED TO NATIONAL PLUMBING CODE REQUIREMENTS.
3. VENT ALL PLUMBING EQUIPMENT AND FIXTURES AS REQUIRED BY CODE. GROUP FIXTURE VENTS TO MINIMIZE ROOF OPENINGS.
4. 75Φ SANITARY VENT TO ATMOSPHERE. INCREASE TO 100Φ AT ROOF PENETRATION.
5. SANITARY WASTE AND DRAINAGE SYSTEM SHALL BE INSTALLED C/W SLOPES, CLEANOUTS, VENTS, TRAPS, TRAP PRIMERS, FIXTURE CONNECTIONS, ETC. TO MEET ALL CODE REQUIREMENTS.
6. ALL HUB DRAINS TO BE DR-38-E1 UNLESS NOTED OTHERWISE.
7. PLUMBING CONTRACTOR TO COORDINATE WITH STRUCTURAL CONTRACTOR TO ENSURE FLOOR SLOPES TOWARDS FLOOR DRAINS.
8. HUB DRAINS FOR PUMP SEAL FLUSH WATER TO BE INSTALLED WITHIN PUMP EQUIPMENT PAD. CONTRACTOR TO CO-ORDINATE WITH PROCESS MECHANICAL CONTRACTOR.
9. PROVIDE FIRE EXTINGUISHERS AS INDICATED ON PLANS, IN ACCORDANCE WITH NFPA 10 AND AS REQUIRED BY AUTHORITY HAVING JURISDICTION. EXTINGUISHERS TO BE 4.5kg ABC C/W WALL MOUNTING BRACKETS.
10. ALL SANITARY PIPING IN LOWER LEVEL TO BE CAST-IN PLACE. CAST-IN PLACE SANITARY PIPING IS TO BE LOCATED BETWEEN THE MATS OF STRUCTURAL STEEL.
11. ALL SANITARY PIPING LOCATED IN THE UPPER LEVEL IS TO BE BELOW THE STRUCTURAL SLAB. SANITARY PIPING IS TO BE SUPPORTED FROM HANGERS INSTALLED IN THE STRUCTURAL SLAB AND BEDDED IN PEA GRAVEL.
12. ALL DOMESTIC WATER SUPPLY PIPING SHALL BE 20Φ UNLESS NOTED OTHERWISE.
13. INSTALL PIPING ON COMMON RACKS WITH PROCESS PIPING WHERE POSSIBLE. COORDINATE WITH OTHER TRADES ON SITE.
14. DRAWING IS DIAGRAMMATIC AND INDICATES INTENT ONLY.

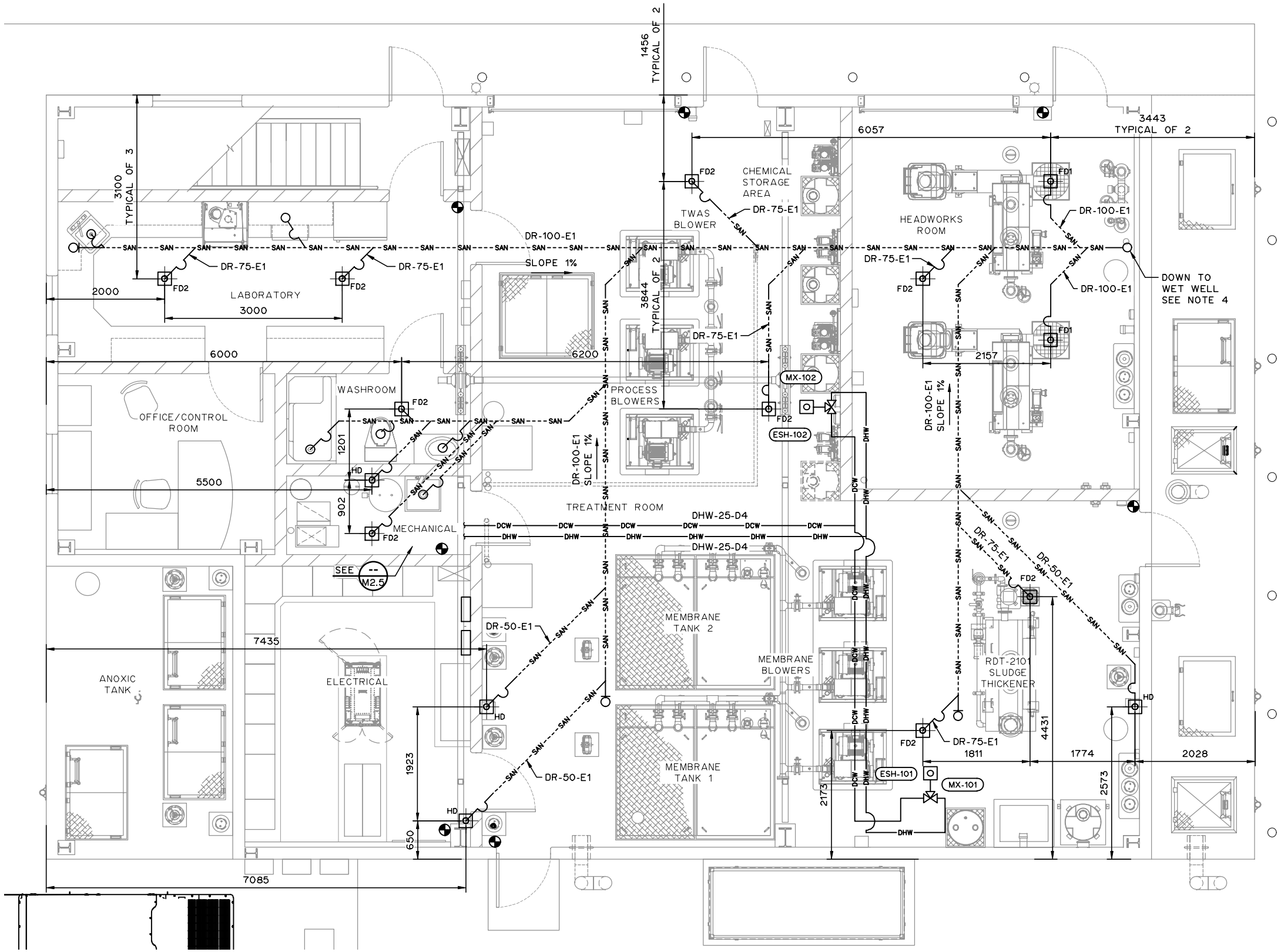

THIS DRAWING MAY HAVE BEEN MODIFIED FROM ITS ORIGINAL SIZE. ALL SCALE NOTATIONS INDICATED ARE BASED ON 11"x17" FORMAT DRAWINGS

ISSUE	YY-MM-DD	REVISION
2	21-01-15	FOR CONSTRUCTION
1	20-10-15	FOR TENDER

Association of Professional Engineers & Geoscientists of Saskatchewan
CERTIFICATE OF AUTHORIZATION
MPE Engineering Ltd.
Number C1334
Permission to Consult held by:

Discipline	Sk. Reg. No.	Signature
MECHANICAL	24112	

PROFESSIONAL ENGINEER R.R. LINSEY MEMBER 24112 2021-01-19 YR. MO. DAY SASKATCHEWAN

MPE Engineering Ltd.

ENGLISH RIVER ENTERPRISES PROPERTY MANAGEMENT LP

WASTEWATER TREATMENT PLANT
MECHANICAL
PLUMBING, FIRE PROTECTION AND SANITARY
MAIN LEVEL PLAN

DESIGNED	R.R.U.	JOB	7603-002-00
DRAWN	T.D.D.	SCALE	1:75
DATE	NOVEMBER 2020	DRAWING	M2.4

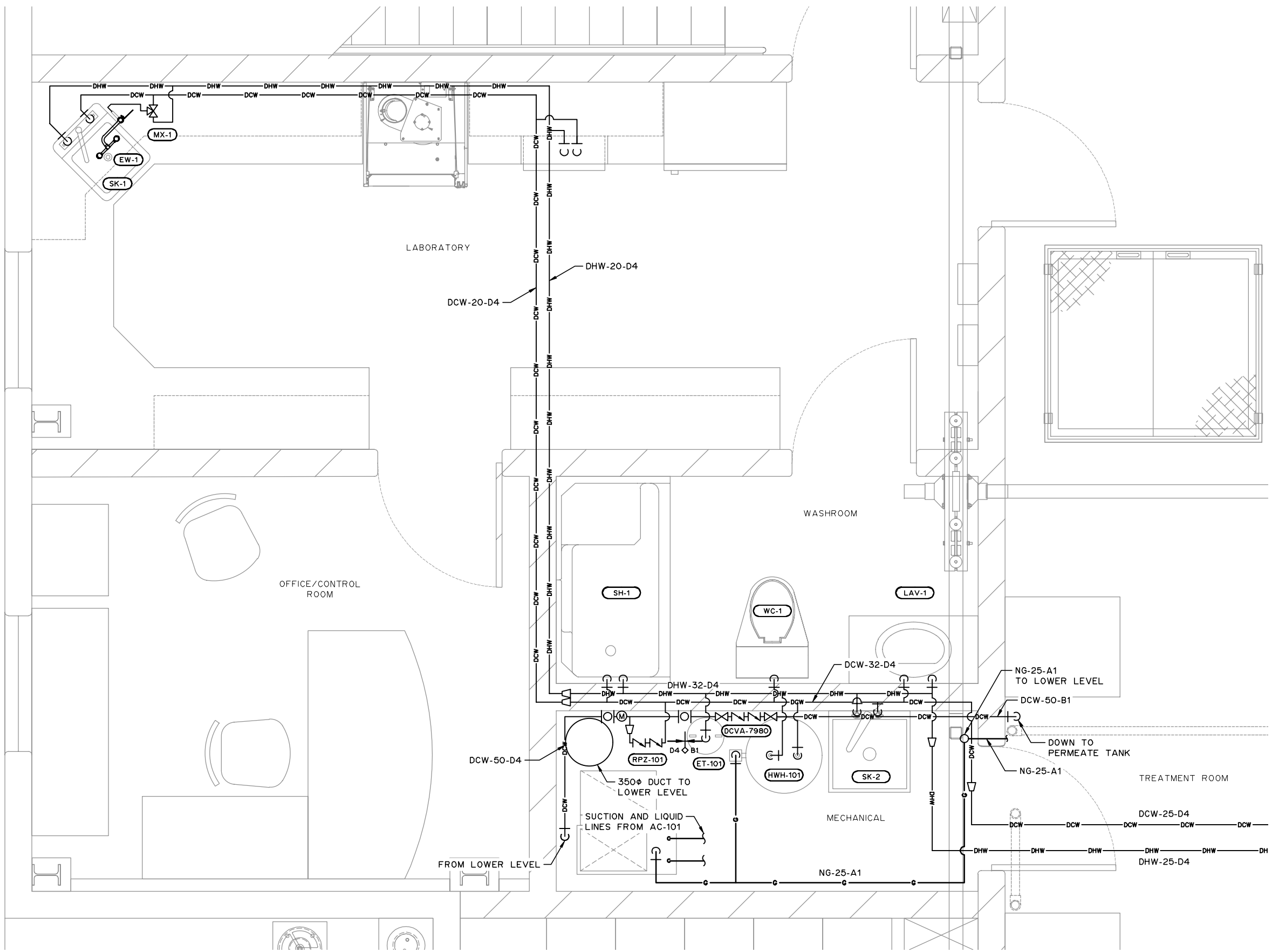

NOTES:

1. FOR INFORMATION REGARDING GENERAL NOTES, UTILITIES, ABBREVIATIONS AND SYMBOLS, REFER TO THE LEGEND DRAWINGS.
2. ALL PLUMBING SHALL BE INSTALLED TO NATIONAL PLUMBING CODE REQUIREMENTS.
3. VENT ALL PLUMBING EQUIPMENT AND FIXTURES AS REQUIRED BY CODE. GROUP FIXTURE VENTS TO MINIMIZE ROOF OPENINGS.
4. CONTRACTOR TO PROVIDE 50mm CONDUIT PVC SLEEVE FOR DOMESTIC HOT AND COLD WATER LINES IN CONCRETE TO FEED LAB FIXTURES.M
5. PROVIDE FIRE EXTINGUISHERS AS INDICATED ON PLANS, IN ACCORDANCE WITH NFPA 10 AND AS REQUIRED BY AUTHORITY HAVING JURISDICTION. EXTINGUISHERS TO BE 4.5kg ABC C/W WALL MOUNTING BRACKETS.
6. ALL DOMESTIC WATER SUPPLY PIPING SHALL BE 20ϕ UNLESS NOTED OTHERWISE.
7. INSTALL PIPING ON COMMON RACKS WITH PROCESS PIPING WHERE POSSIBLE. COORDINATE WITH OTHER TRADES ON SITE.
8. DRAWING IS DIAGRAMMATIC AND INDICATES INTENT ONLY.

THIS DRAWING MAY HAVE BEEN MODIFIED FROM ITS ORIGINAL SIZE. ALL SCALE NOTATIONS INDICATED ARE BASED ON 11"x17" FORMAT DRAWINGS

ISSUE	YY-MM-DD	REVISION
2	21-01-15	FOR CONSTRUCTION
1	20-10-15	FOR TENDER

Association of Professional Engineers & Geoscientists of Saskatchewan
CERTIFICATE OF AUTHORIZATION
MPE Engineering Ltd.
Number C1334
Permission to Consult held by:

Discipline	Sk. Reg. No.	Signature
MECHANICAL	24112	

PROFESSIONAL ENGINEER
R.R. TIMSY
MEMBER 24112
2021-01-19
YR. MO. DAY
SASKATCHEWAN

MPE Engineering Ltd.

ENGLISH RIVER ENTERPRISES PROPERTY MANAGEMENT LP

WASTEWATER TREATMENT PLANT
MECHANICAL
PLUMBING AND FIRE PROTECTION
MECHANICAL ROOM, WASHROOM, AND LABORATORY

DESIGNED	R.R.U.	JOB	7603-002-00
DRAWN	T.D.D.	SCALE	1:30
DATE	NOVEMBER 2020	DRAWING	M2.5

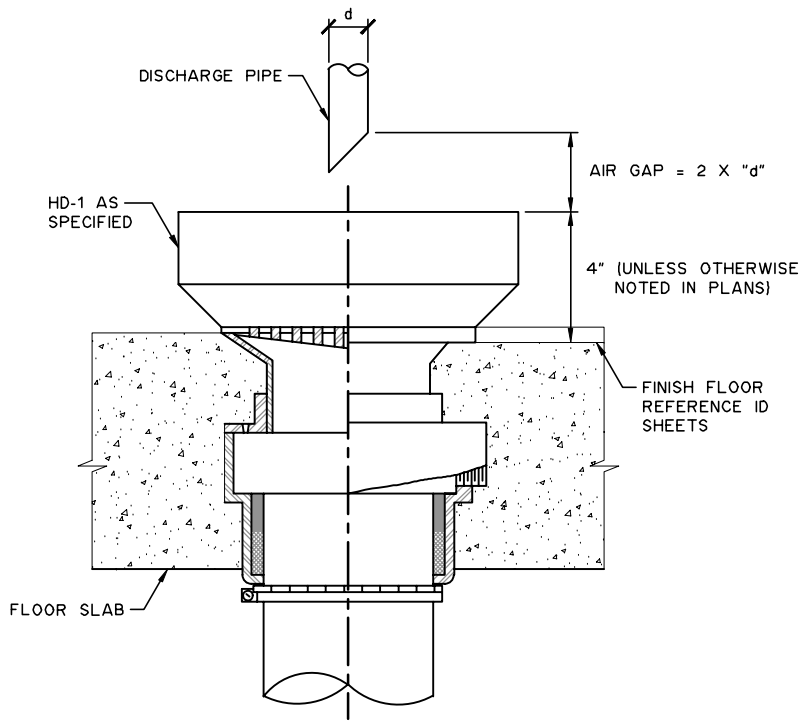

TYPICAL HUB DRAIN DETAIL

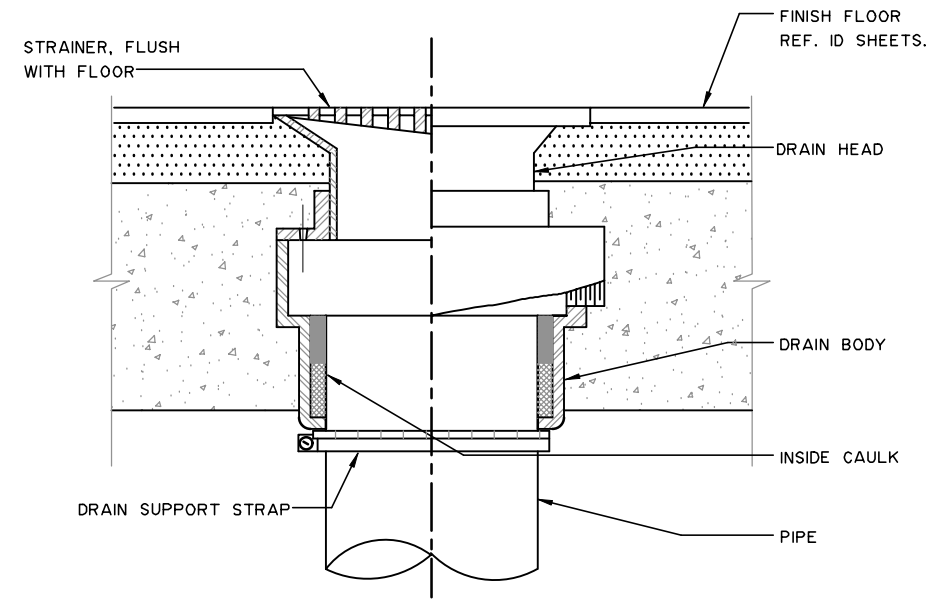

TYPICAL FLOOR DRAIN DETAIL

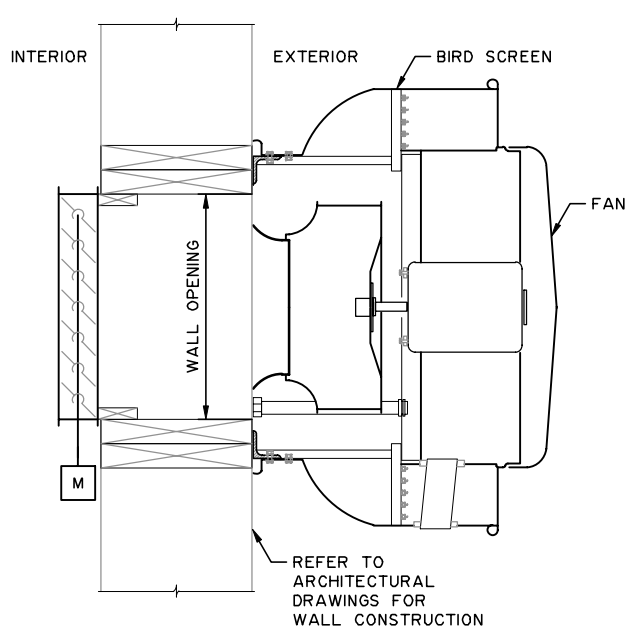

TYPICAL WALL FAN DETAIL

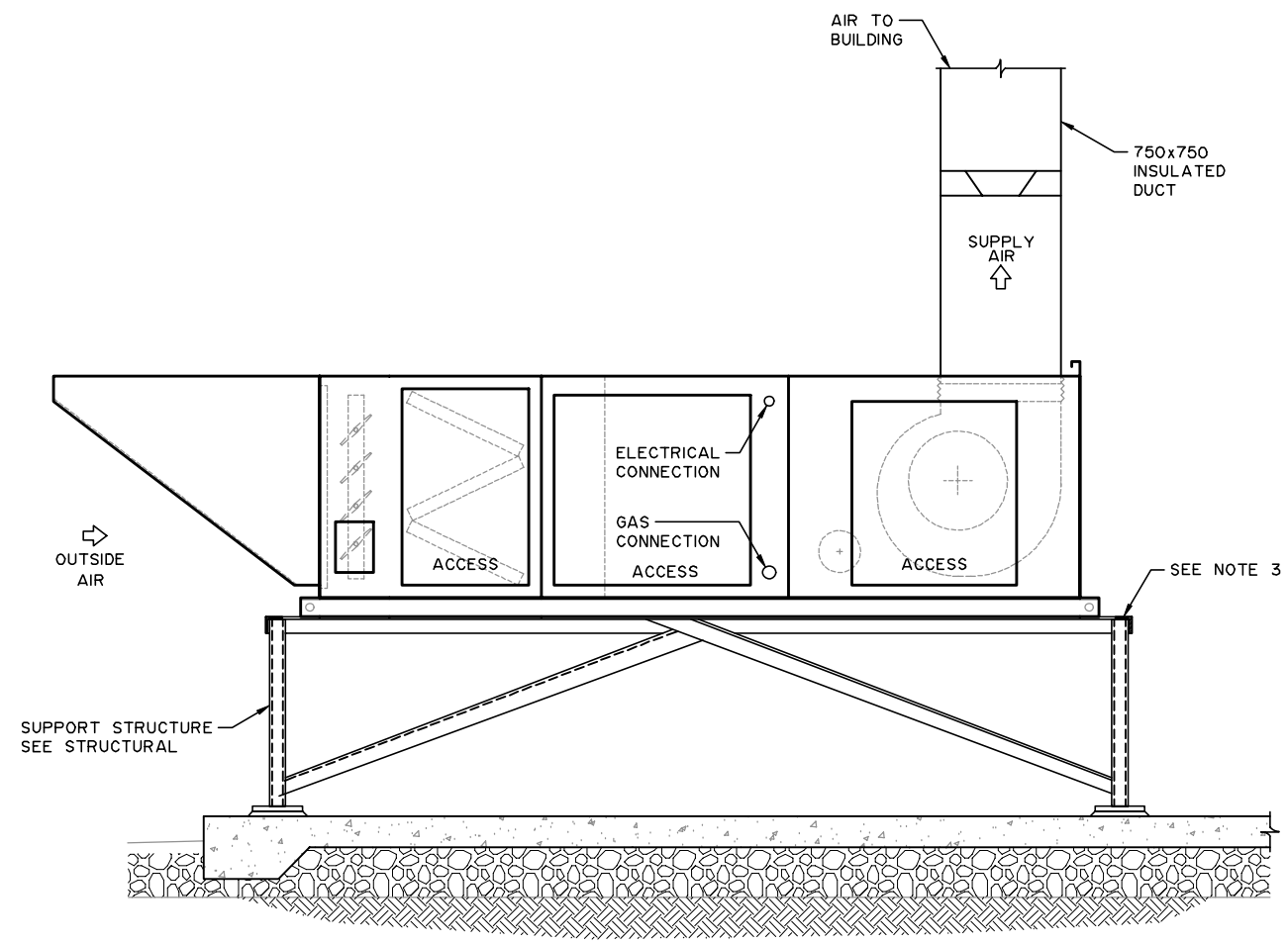

TYPICAL MAKEUP AIR HANDLING UNIT

NOTES:

1. FOR INFORMATION REGARDING GENERAL NOTES, UTILITIES, ABBREVIATIONS AND SYMBOLS, REFER TO THE LEGEND DRAWINGS.
2. FABRICATE AND INSTALL DUCTWORK IN ACCORDANCE WITH SMACHA STANDARDS.
3. CONTRACTOR TO CONFIRM DIMENSIONS OF AIR HANDLING UNIT AND ENSURE DIMENSIONS OF SUPPORT STRUCTURE AND PAD SUIT UNIT. COORDINATE WITH STRUCTURAL.

THIS DRAWING MAY HAVE BEEN MODIFIED FROM ITS ORIGINAL SIZE. ALL SCALE NOTATIONS INDICATED ARE BASED ON 11"x17" FORMAT DRAWINGS

ISSUE	YY-MM-DD	REVISION
2	21-01-15	FOR CONSTRUCTION
1	20-10-15	FOR TENDER

Association of Professional Engineers & Geoscientists of Saskatchewan
CERTIFICATE OF AUTHORIZATION
MPE Engineering Ltd.
Number C1334
Permission to Consult held by:

Discipline	Sk. Reg. No.	Signature
MECHANICAL	24112	

PROFESSIONAL ENGINEER
R.R. TIMSY
MEMBER 24112
2021-01-19
VR. MILGAY
SASKATCHEWAN

MPE Engineering Ltd.

ENGLISH RIVER ENTERPRISES
PROPERTY MANAGEMENT LP

WASTEWATER TREATMENT PLANT
MECHANICAL
DETAILS

DESIGNED	R.R.U.	JOB	7603-002-00
DRAWN	T.D.D.	SCALE	NTS
DATE	NOVEMBER 2020	DRAWING	M3.1

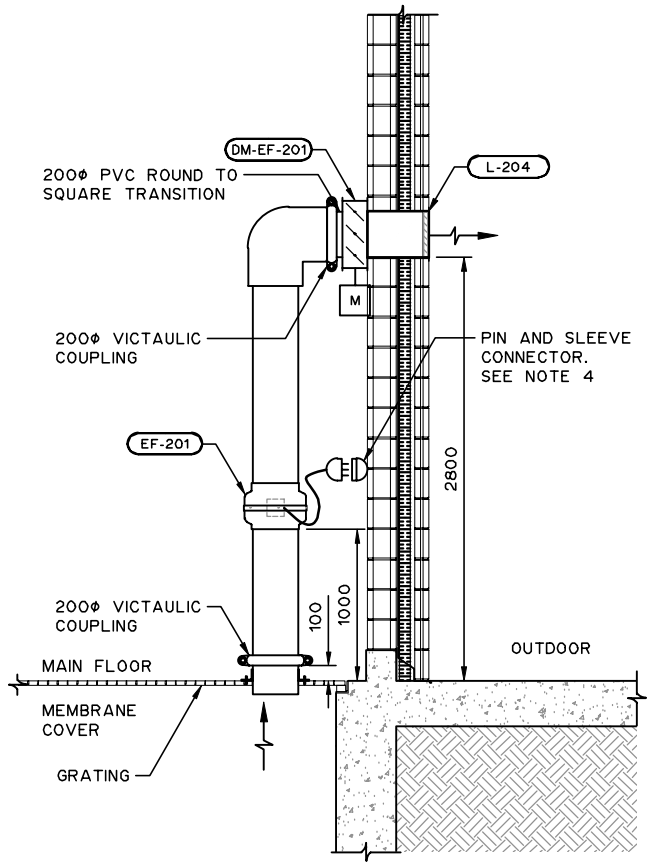

EF-201

A
M2.2

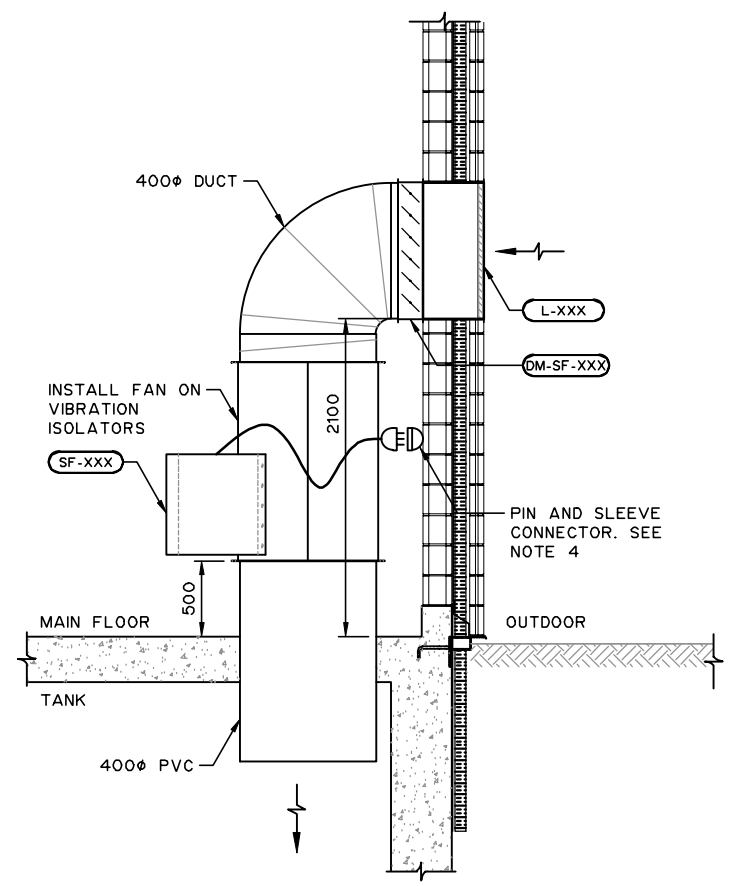

SF-202 & SF-203

B
M2.2

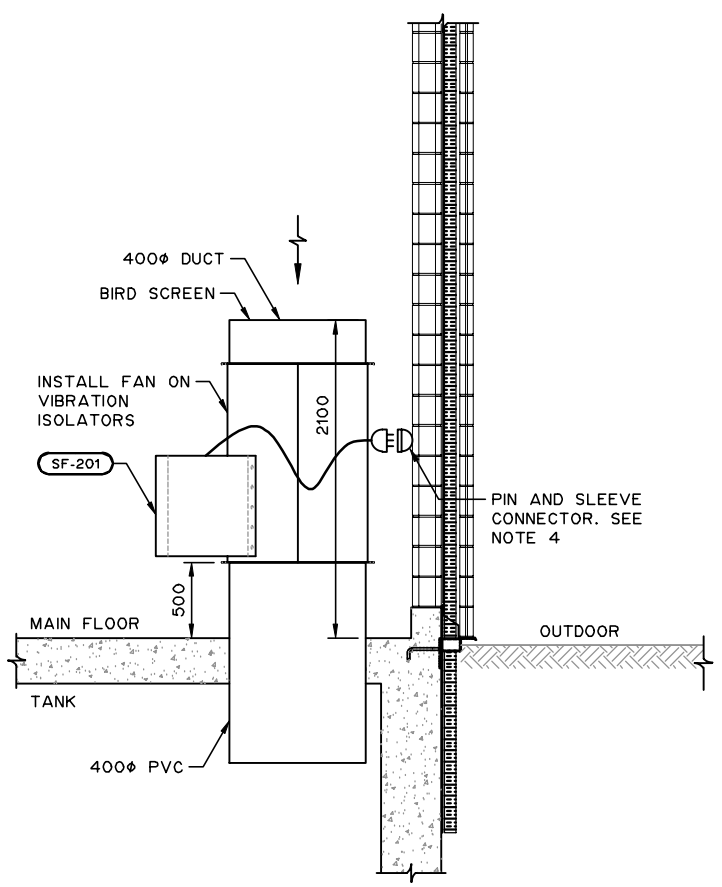

SF-201

C
M2.2

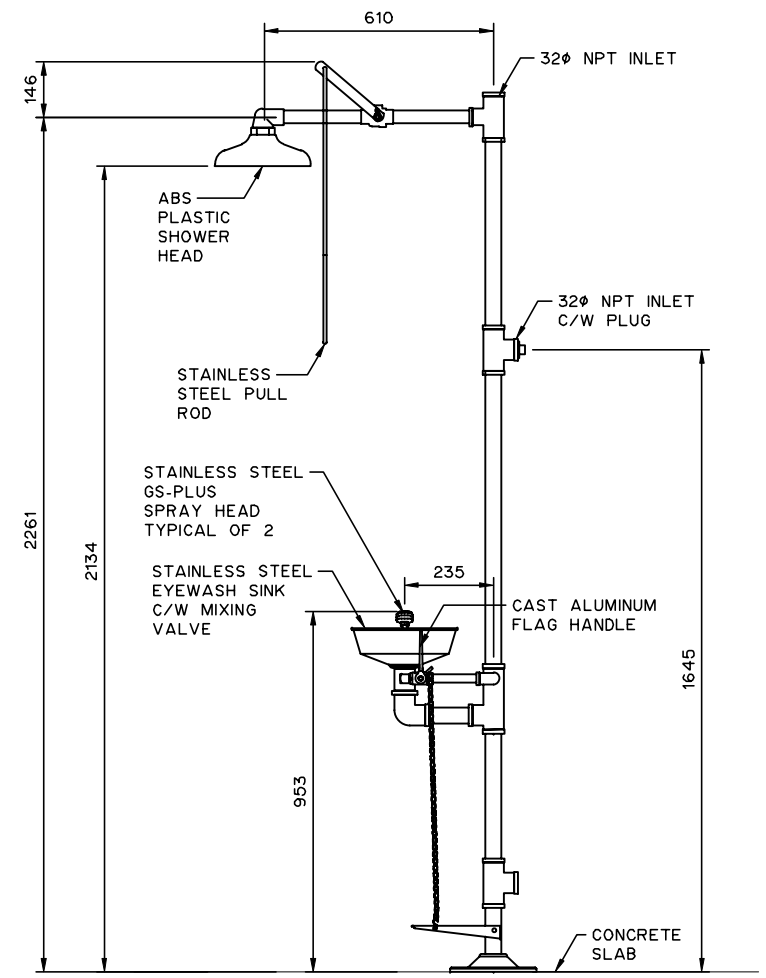

NOTE: REFER TO SPECIFICATIONS FOR MORE DETAILS

SHOWER AND EYE/FASH WASH COMBINATION DETAL

D
--

NOTES:

1. FOR INFORMATION REGARDING GENERAL NOTES, UTILITIES, ABBREVIATIONS AND SYMBOLS, REFER TO THE LEGEND DRAWINGS.
2. FABRICATE AND INSTALL DUCTWORK IN ACCORDANCE WITH SMACHA STANDARDS.
3. INSTALL LOUVRE IN ACCORDANCE WITH MANUFACTURERS INSTRUCTIONS.
4. CONTRACTOR TO MOUNT PIN AND SLEEVE CONNECTOR 1500mm AWAY MAXIMUM IN A LOCATION ACCESSIBLE FOR MAINTENANCE.

THIS DRAWING MAY HAVE BEEN MODIFIED FROM ITS ORIGINAL SIZE. ALL SCALE NOTATIONS INDICATED ARE BASED ON 11"x17" FORMAT DRAWINGS

ISSUE	YY-MM-DD	REVISION
2	21-01-15	FOR CONSTRUCTION
1	20-10-15	FOR TENDER

Association of Professional Engineers & Geoscientists of Saskatchewan
CERTIFICATE OF AUTHORIZATION
MPE Engineering Ltd.
Number C1334
Permission to Consult held by:

Discipline	Sk. Reg. No.	Signature
MECHANICAL	24112	

PROFESSIONAL ENGINEER
R.R. LINSEY
MEMBER 24112
2021-01-19
YR. MO. DAY
SASKATCHEWAN

MPE Engineering Ltd.

ENGLISH RIVER ENTERPRISES PROPERTY MANAGEMENT LP

WASTEWATER TREATMENT PLANT
MECHANICAL
DETAILS

DESIGNED	R.R.U.	JOB	7603-002-00
DRAWN	T.D.D.	SCALE	NTS
DATE	NOVEMBER 2020	DRAWING	M3.2

PUMPS

- VERTICAL TURBINE PUMP (CLOSED SHAFT / OPEN SHAFT)
- CENTRIFUGAL MULTISTAGE PUMP
- RECIPROCATING PUMP
- VACUUM PUMP
- ROTARY PUMP
- PERISTALTIC PUMP
- METERING PUMP
- DUPLEX METERING PUMP
- AIR OPERATED DIAPHRAGM PUMP
- SCREW PUMP
- SUBMERSIBLE EFFLUENT PUMP
- SUMP PUMP
- SUBMERSIBLE TURBINE PUMP
- SUBMERSIBLE MULTISTAGE PUMP
- JET MIXER EJECTOR/EDUCTOR
- DRUM PUMP

COMPRESSORS

- CENTRIFUGAL COMPRESSOR
- ROTARY LOBE OR CLAW COMPRESSOR
- RECIPROCATING AIR COMPRESSOR
- SCREW AIR COMPRESSOR
- REFRIGERATED AIR DRYER
- DESICCANT DRYER

BLOWERS

- CENTRIFUGAL FAN OR BLOWER
- POSITIVE DISPLACEMENT BLOWER
- FAN

VALVES

- GATE (GAV)
- GLOBE (GLV)
- BUTTERFLY (BUV)
- BALL (BAV)
- PLUG (PLV)
- NEEDLE (NEV)
- CHECK (CHV)
- DIAPHRAGM (DIV)
- BLOCK AND BLEED (BBV)
- FLAP GATE (WFG)
- MUD (MUV)
- BLOCK (BV)
- SLIDE GATE (SGV)
- SLUICE GATE (SLV)
- PINCH (PV)
- KNIFE GATE (KGV)
- ROTARY (ROV)
- POST INDICATOR (PIV)
- UNKNOWN (UNV)
- FLOAT OPERATED
- SOLENOID
- SOLENOID 3-WAY
- SOLENOID 4-WAY
- NORMALLY OPEN (NO)
- NORMALLY CLOSED (NC)
- LOCK OPEN (LO)
- LOCK CLOSED (LC)
- CAR SEAL OPEN (CSO)
- CAR SEAL CLOSED (CSC)

ELECTRIC CONTROL VALVE ACTUATORS

- MOTORIZED VALVE
- MOTORIZED VALVE (FAIL OPEN)
- MOTORIZED VALVE (FAIL CLOSED)
- MOTORIZED VALVE (FAIL LAST)

HYDRAULIC CONTROL VALVE ACTUATORS

- DIAPHRAGM ACTUATED VALVE
- FLOW CONTROL VALVE
- DIAPHRAGM ACTUATED PRESSURE CONTROL VALVE (FLAG IN DIRECTION OF CONTROLLED PRESSURE)
- DIRECT ACTING PRESSURE CONTROL VALVE (FLAG IN DIRECTION OF CONTROLLED PRESSURE)
- DIAPHRAGM ACTUATED DIAPHRAGM VALVE C/W SOLENOID AND MICRO SWITCH

PNEUMATIC CONTROL VALVE ACTUATORS

- CYLINDER OPERATED CONTROL VALVE
- SINGLE ACTING ACTUATOR (AIR TO CLOSE)
- DOUBLE ACTING ACTUATOR
- SOLENOID ON ACTUATOR
- POSITIONER AND CYLINDER (AIR TO CLOSE) SINGLE ACTING
- POSITIONER AND CYLINDER (AIR TO OPEN) SINGLE ACTING
- POSITIONER AND CYLINDER (AIR TO AIR) DOUBLE ACTING
- ELECTRO-HYDRAULIC CONTROL VALVE (E/H)
- THERMOSTATICALLY CONTROLLED VALVE

RELIEF VALVES

- AIR VACUUM (ANTI-SIPHON) (AV)
- AIR RELEASE/VACUUM (CAV)
- AIR RELEASE (ARV)
- RUPTURE DISC
- DIRECT ACTING SAFETY RELIEF VALVE (ANGLE BODY)
- DIRECT ACTING SAFETY RELIEF VALVE (GLOBE BODY)
- OPEN DRAIN TO SEWER OR FLOOR DRAIN
- MUSHROOM VENT
- GOOSENECK VENT (PIPE)

MF/UF/RO

- FOUR PORT HOUSING
- TWO PORT HOUSING
- END PORT HOUSING
- MEMBRANE MODULE

HEATING

- HEAT EXCHANGER
- TANK HEATER
- IN-LINE HEATER
- PLATE AND FRAME HEAT EXCHANGER
- DESUPERHEATER
- RADIATOR (AIR)

MIXING DEVICES

- VERTICAL MIXER
- INLINE MIXER
- STATIC MIXER
- TANK MIXER
- FLOCCULATOR MIXER

FILTERS

- STRAINER "Y" TYPE
- STRAINER BASKET TYPE
- STRAINER BASKET TYPE (DUPLEX)
- FIXED SCREEN
- TRAVELING WATER SCREEN
- LINE FILTER
- PRE-FILTER
- PRE-FILTER C/W REGULATOR
- COMBINATION LINE FILTER C/W REGULATOR AND LUBRICATOR
- CENTRIFUGE

LINE IDENTIFICATION

- PRIMARY FLOW LINE
- SECONDARY FLOW LINE
- FUTURE LINE
- EXISTING LINE
- CHANNEL
- CONNECTING LINES
- CROSS OVER LINES (BREAK ALL VERTICAL LINES)
- DIRECTION OF FLOW
- DIRECTION OF SLOPE (2% SLOPE)
- INSULATION COLD OR PERSONAL PROTECTION
- INSULATION TRACE - ELECTRIC
- INSULATION TRACE - STEAM OR GLYCOL
- LINE SPECIFICATION CHANGE (A1 B1)
- SPECTACLE BLIND (SB)
- LINE CONNECTION TO ANOTHER DRAWING (DWG NO.)
- LINE CONNECTION FROM ANOTHER DRAWING (DWG NO.)

FLOW ELEMENTS

- FLUME
- WEIR
- TURBINE OR PROPELLER TYPE PRIMARY ELEMENT
- ROTAMETER TYPE FLOW INDICATOR (FI)
- PITOT TUBE OR PITOT VENTURI TUBE
- ORIFICE PLATE TYPE FLOW INDICATOR RO - RESTRICTION ORIFICE
- FLOW SIGHT GLASS (FI)
- FLOW STRAIGHTENING VANES
- VENTURI TUBE
- POSITIVE DISPLACEMENT TYPE FLOW TOTALIZING INDICATOR
- VORTEX SENSOR
- MAGNETIC FLOW METER (M)
- ULTRASONIC FLOW METER (U)
- TURBINE FLOW METER
- BACK FLOW PREVENTER

ROTATING EQUIPMENT

- COMMINUTOR
- BARMINUTOR
- BELT CONVEYOR
- SCREW CONVEYOR
- NATURAL GAS ENGINE (NG)
- DIESEL ENGINE (D)
- VARIABLE SPEED GEAR BOX (MECHANICAL)
- GEAR DRIVE

SYMBOLS

- ELECTRIC MOTOR (M)
- PNEUMATIC MOTOR (P)
- SOLENOID (S)
- I/P CONVERTOR
- SPECIALTY ITEM (SP XX)

VESSELS/TANKS

- PRESSURE TANK
- HOPPER TANK
- DOME TANK
- OPEN TANK
- CLOSED TANK
- WASH DOWN BOWL

MISCELLANEOUS

- FIRE EXTINGUISHER
- DIAPHRAGM SEAL/GAUGE GUARD
- PULSATION DAMPENER
- SPRAY NOZZLE
- COARSE BUBBLE DIFFUSER
- FINE BUBBLE DIFFUSER
- LAUNDER DIFFUSER/COLLECTOR
- CALIBRATION COLUMN
- SACRIFICIAL ANODE
- ULTRAVIOLET REACTOR
- SILENCER (MUFFLER)
- IMPACTOR
- LEVEL SWITCH
- ULTRASONIC OR RADAR LEVEL INSTRUMENT
- INJECTION QUILL (CHEMICAL INJECTION NOZZLE)
- HOSE CONNECTION (BIBB)
- SAFETY SHOWER
- CAMLOCK CONNECTION
- EYE WASH
- SAMPLE POINT (SP)
- DRAIN POINT (DP)
- MANUAL VENT/PURGE POINT (VP)
- PIG LAUNCHER
- PIG RECEIVER

NOTES:

1. ALL ELEVATIONS AND STATIONS ARE IN METERS UNLESS NOTED OTHERWISE. ALL DIMENSIONS AND PIPE SIZES ARE IN MILLIMETERS UNLESS NOTED OTHERWISE.
2. ALL ITEMS SHOWN IN BOLD INDICATE WORK TO BE DONE. ALL ITEMS SHOWN IN LIGHT INDICATE EXISTING CONDITIONS. ALL ITEMS SHOWN IN LIGHT/DASHED INDICATE FUTURE WORK AND EQUIPMENT.

THIS DRAWING MAY HAVE BEEN MODIFIED FROM ITS ORIGINAL SIZE. ALL SCALE NOTATIONS INDICATED ARE BASED ON 11"x17" FORMAT DRAWINGS

ISSUE	YY-MM-DD	REVISION
2	21-01-15	FOR CONSTRUCTION
1	20-10-15	FOR TENDER

Association of Professional Engineers & Geoscientists of Saskatchewan
CERTIFICATE OF AUTHORIZATION
MPE Engineering Ltd.
Number C1334
Permission to Consult held by:

Discipline	Sk. Reg. No.	Signature
CIVIL	52866	

PROFESSIONAL ENGINEER — I. KAGOBO — MPE Engineering Ltd. — 2021-01-18 YR. MN. DAY — SASKATCHEWAN

MPE Engineering Ltd.

ENGLISH RIVER ENTERPRISES PROPERTY MANAGEMENT LP

WASTEWATER TREATMENT PLANT
PROCESS PIPING
EQUIPMENT LEGEND

DESIGNED	I.K.	JOB	7603-002-00
DRAWN	L.J.S.	SCALE	NONE
DATE	NOVEMBER 2020	DRAWING	P0.1

PIPE CONNECTIONS

DESCRIPTION	DOUBLE LINE (> 100ø)	SINGLE LINE (< 100ø)
WELD NECK FLANGED CONNECTION		
SLIP-ON FLANGED CONNECTION		
VICTAULIC FLANGED CONNECTION	VF	VF
BLIND FLANGE		
INSULATING FLANGE	IF	IF
WELDED CONNECTION (RANDOM LENGTH PIPE)		
SCREWED CONNECTION (RANDOM LENGTH PIPE)		
VICTAULIC JOINT CONNECTION	VC	VC
UNION		
COMPRESSION COUPLING	CC	CC
FLANGED COUPLING	FCC	FCC
BELLxFLANGE		
BELL AND SPIGOT, RING TIGHT, MECHANICAL JOINT CONNECTION		
COUPLER (PVC)		

PIPE TO VALVE CONNECTIONS

DESCRIPTION	DOUBLE LINE (> 100ø)	SINGLE LINE (< 100ø)
WELD NECK FLANGED CONNECTION		
SLIP-ON FLANGED CONNECTION		
WELDED CONNECTION		
THREADED CONNECTION		
VICTAULIC CONNECTION	VC	VC

PIPE FITTINGS

DESCRIPTION	DOUBLE LINE (> 100ø)	SINGLE LINE (< 100ø)
CROSS		
CROSS (BRANCH UP)		
45° ELBOW		
45° ELBOW (UP)		
45° ELBOW (DOWN)		
LATERAL		
90° ELBOW		
90° ELBOW (UP)		
90° ELBOW (DOWN)		
45° ELBOW (SHORT RADIUS)	SR	SR
90° ELBOW (SHORT RADIUS)	SR	SR
BASE ELBOW		
SIDE OUTLET ELBOW (UP)		
SIDE OUTLET ELBOW (DOWN)		
TEE		
TEE (BRANCH UP)		
TEE (BRANCH DOWN)		
SIDE OUTLET TEE (UP)		
CAP		
CONCENTRIC REDUCER		
ECCENTRIC REDUCER		
EXPANSION JOINT		
FLEXIBLE CONNECTION		

LINE LABELLING

PIPE DIAMETER (mm) — PIPE MATERIAL — LINE IDENTIFICATION — SPECIAL TREATMENT CODES

YYY-200-ZZZ-a,b,c

LINE IDENTIFICATION (YYY)

AA	AQUA AMMONIA
AAS	AERATION AIR SUPPLY
ACI	ACID (pH ADJUSTMENT)
ACS	POWDERED ACTIVATED CARBON SOLUTION
AD	AIR DISTRIBUTION
AL	ALUM
ALS	ALUM SOLUTION
ALG	ALGAECIDE SOLUTION
AMG	AMMONIA GAS
AMS	AMMONIA SOLUTION
ANS	ANTISCALANT
AS	AIR SUPPLY
BWS	BACKWASH SUPPLY
CAS	CITRIC ACID SOLUTION
CDG	CARBON DIOXIDE GAS
CDS	CARBON DIOXIDE SOLUTION
CI	CORROSION INHIBITOR
CIPS	CLEAN IN PLACE SUPPLY
CIPR	CLEAN IN PLACE RETURN
CIPD	CLEAN IN PLACE DRAIN
CLG	CHLORINE GAS
CLS	CHLORINE SOLUTION
CO	COAGULANT
COS	COAGULANT SOLUTION
CS	CAUSTIC SODA SOLUTION
DCW	DOMESTIC COLD WATER
DE	DAF EFFLUENT
DHW	DOMESTIC HOT WATER
DHWR	DOMESTIC HOT WATER RECIRCULATION
DL	DIESEL FUEL
DR	DRAIN
DW	DAF WASTE
EW	EFFLUENT WATER
FL	FLUORIDE
FTW	FILTER TO WASTE
FW	FILTERED WATER
G(H)	NATURAL GAS (HIGH PRESSURE)
G(L)	NATURAL GAS (LOW PRESSURE)
GLS	GLYCOL SUPPLY
GLR	GLYCOL RETURN
HWS	HOT WATER SUPPLY
HWR	HOT WATER RETURN
IA	INSTRUMENT AIR
OF	OVERFLOW
PLY	POLYELECTROLYTE (LIQUID)
PLYS	POLYELECTROLYTE SOLUTION
PO	POLYMER
POS	POLYMER SOLUTION
PPS	POTASSIUM PERMANGANATE SOLUTION
PSW	PLANT SERVICE WATER
PW	POTABLE WATER
RAS	RETURN ACTIVATED SLUDGE
RF	REFRIGERANT
RJW	REJECT WATER
RW	RAW WATER
S	SANITARY WASTE
SA	SULFURIC ACID
SAM	SAMPLE LINE
SAS	SODA ASH SOLUTION
SB	SODIUM BISULPHATE
SEN	SENSING LINE
SHS	SODIUM HYPOCHLORITE SOLUTION
SLG	SLUDGE
SPSW	SOFTENED PLANT SERVICE WATER
SU	SUPERNATANT
SV	SANITARY VENT
TEW	TEMPERED EFFLUENT WASTE
TW	TREATED WATER
VE	VENT
WAS	WASTE ACTIVATED SLUDGE
WT	WEEPING TILE
XR	EXCESS RECIRCULATION

PIPE MATERIAL (ZZZ)

LINE CODE	FLANGE RATING	SCH OR THICKNESS	BASIC MATERIAL	SPECIAL NOTES
A1	ANSI 150	-	CARBON STEEL	STANDARD WEIGHT (STD)
A2	ANSI 150	-	CARBON STEEL	EXTRA STRONG (XS)
A3	ANSI 300	SCH 80	CARBON STEEL	EXTRA STRONG (XS)
B1	ANSI 150	SCH 80	PVC	-
B2	ANSI 150	SCH 40	PVC	-
B3	ANSI 150	SDR 18	PVC	-
B4	ANSI 150	SDR 21	PVC	-
B5	ANSI 150	SDR 26	PVC	-
B6	ANSI 150	SDR 28	PVC	-
B7	ANSI 150	SDR 32.5	PVC	-
B8	ANSI 150	SDR 35	PVC	-
B9	ANSI 150	SDR 41	PVC	-
B10	ANSI 150	SDR 51	PVC	-
B11	AWWA 150	C900 AND C905	PVC	-
B12	-	SCH 80	PVC (WELL RISER PIPE)	CERTA-LOCK
C1	-	TYPE K	COPPER	-
C2	-	TYPE L	COPPER	-
C3	-	TYPE M	COPPER	-
D1	ANSI 150	SCH 10S	STAINLESS STEEL, 304L	-
D2	ANSI 150	SCH 10S	STAINLESS STEEL, 316L	-
D3	ANSI 150	SCH 40S	STAINLESS STEEL, 304L	-
D4	ANSI 150	SCH 40S	STAINLESS STEEL, 316L	-
D5	ANSI 300	SCH 40S	STAINLESS STEEL, 304L	-
D6	ANSI 300	SCH 40S	STAINLESS STEEL, 316L	-
D7	ANSI 300	SCH 80S	STAINLESS STEEL, 304L	-
D8	ANSI 300	SCH 80S	STAINLESS STEEL, 316L	-
E1	-	-	PVC-DWV	-
E2	-	-	ABS-DWV	-
F1	-	-	BIG 'O' DRAIN	C/W FILTER SOCK
G1	ANSI 150	-	DUCTILE IRON	-
G2	ANSI 150	-	CAST IRON	-
H1	-	DR 9	HDPE, C906	-
H2	-	DR 11	HDPE, C906	-
H3	-	DR 13.5	HDPE, C906	-
H4	-	DR 15.5	HDPE, C906	-
H5	-	DR 17	HDPE, C906	-
H6	-	DR 32	HDPE, C906	-
H7	-	DR 11	PE 2406, YELLOW	-
H11	-	-	PEX A, WATER SERVICE	-
J1	-	-	ASBESTOS CEMENT PIPE	-
J2	-	CLASS V	REINFORCED CONCRETE PIPE	-
K1	-	-	PE OD TUBING	-
K2	-	-	PE ID TUBING	-
K3	-	-	LLDPE OD TUBING	-
K4	-	-	PP OD TUBING	-

SPECIAL TREATMENT CODES (a,b,c)

A	CEMENT MORTAR LINING
B	INTERNAL HOT APPLIED COAL TAR LINING
C	EXTERNAL HOT APPLIED COAL TAR LINING
D	INTERNAL EPOXY COATED
E	EXTERNAL EPOXY COATED
F	EXTERNAL YELLOW JACKETED
G	EXTERNAL DOUBLE WRAP POLYKEN TAPE
H	EXTERNAL INSULATED
I	EXTERNAL INSULATION AND ALUMINIUM MECHANICAL PROTECTION
J	EXTERNAL SHOP PRIME
K	DENSYL MASTIC WRAP - BURIED FLANGES, COUPLERS AND VALVES
L	GALVANIZED
M	ROCK SHIELD
N	FROST SHIELDED
P	INSTALLED IN RPVC CONDUIT
R	TRACER WIRE INSTALLED ABOVE PIPE

NOTES:

1. ALL ELEVATIONS AND STATIONS ARE IN METERS UNLESS NOTED OTHERWISE. ALL DIMENSIONS AND PIPE SIZES ARE IN MILLIMETERS UNLESS NOTED OTHERWISE.
2. ALL ITEMS SHOWN IN BOLD INDICATE WORK TO BE DONE. ALL ITEMS SHOWN IN LIGHT INDICATE EXISTING CONDITIONS. ALL ITEMS SHOWN IN LIGHT/DASHED INDICATE FUTURE WORK AND EQUIPMENT.

THIS DRAWING MAY HAVE BEEN MODIFIED FROM ITS ORIGINAL SIZE. ALL SCALE NOTATIONS INDICATED ARE BASED ON 11"x17" FORMAT DRAWINGS

ISSUE	YY-MM-DD	REVISION
2	21-01-15	FOR CONSTRUCTION
1	20-10-15	FOR TENDER

Association of Professional Engineers & Geoscientists of Saskatchewan
CERTIFICATE OF AUTHORIZATION
MPE Engineering Ltd.
Number C1334
Permission to Consult held by:

Discipline	SK. Reg. No.	Signature
CIVIL	52866	

PROFESSIONAL ENGINEER — KAGOBE — MEMBER 52866 — 2021-01-18 (YR. MN. DAY) — SASKATCHEWAN

MPE Engineering Ltd.

ENGLISH RIVER ENTERPRISES PROPERTY MANAGEMENT LP

WASTEWATER TREATMENT PLANT
PROCESS
PIPING LEGEND

DESIGNED	I.K.	JOB	7603-002-00
DRAWN	L.J.S.	SCALE	NONE
DATE	NOVEMBER 2020	DRAWING	P0.2

IDENTIFICATION LETTERS

	FIRST LETTER		SUCCEEDING LETTERS		
	MEASURED OR INITIATING VARIABLE	MODIFIER	READOUT OR PASSIVE FUNCTION	INPUT/OUTPUT FUNCTION	MODIFIER
A	ANALYSIS		ALARM		AUTO
B	BURNER, COMBUSTION		USER'S CHOICE	USER'S CHOICE	USER'S CHOICE
C	COMMUNICATION			CONTROL	CLOSE
D	USER'S CHOICE	DIFFERENTIAL			
E	VOLTAGE		SENSOR (PRIMARY ELEMENT)		
F	FLOW RATE	RATIO (FRACTION)			FAULT
G	USER'S CHOICE		GLASS, VIEWING DEVICE		
H	HAND				HIGH
I	CURRENT (ELECTRICAL)		INDICATE		
J	POWER	SCAN			
K	TIME, TIME SCHEDULE	TIME RATE OF CHANGE		CONTROL STATION	
L	LEVEL		LIGHT		LOW
M	MOTOR	MOMENTARY			MIDDLE INTERMEDIATE
N	SECURITY		USER'S CHOICE	USER'S CHOICE	USER'S CHOICE
O	USER'S CHOICE		ORIFICE, RESTRICTION		OPEN
P	PRESSURE, VACUUM		POINT (TEST) CONNECTION		
Q	QUANTITY OR EVENT	INTEGRATE, TOTALIZE			
R	RADIATION		RECORD		RUN/REMOTE
S	SPEED, FREQUENCY	SAFETY		SWITCH/STATUS	STOP
T	TEMPERATURE			TRANSMIT	
U	MULTIVARIABLE		MULTIFUNCTION	MULTIFUNCTION	MULTIFUNCTION
V	VIBRATION, MECHANICAL ANALYSIS			VALVE, DAMPER, LOUVER	
W	WEIGHT, FORCE		WELL		
X	UNCLASSIFIED	X-AXIS	UNCLASSIFIED	UNCLASSIFIED	UNCLASSIFIED
Y	EVENT, STATE OR PRESENCE	Y-AXIS		RELAY, COMPUTE, CONVERT	
Z	POSITION, DIMENSION	Z-AXIS		DRIVER, ACTUATOR, UNCLASSIFIED FINAL CONTROL ELEMENT	

INSTRUMENT/DEVICE IDENTIFICATION EXAMPLES (aaa)

aaa

AIT	ANALYZER INDICATOR TRANSMITTER
FCV	FLOW CONTROL VALVE
FIT	FLOW INDICATOR TRANSMITTER
LIT	LEVEL INDICATOR TRANSMITTER
PCV	PRESSURE CONTROL VALVE
PIT	PRESSURE INDICATOR TRANSMITTER
PI	PRESSURE INDICATOR (PRESSURE GAGE)
TSH	TEMPERATURE SWITCH HIGH (HEAT DETECTOR)
TSL	TEMPERATURE SWITCH LOW (HEAT DETECTOR)
ZSC	POSITION SWITCH CLOSE (DOOR CONTACT)

VALVE FUNCTION EXAMPLES (aaa)

aaa

ZY or ZC	POSITION COMPUTE/CONVERT (CONTROL) - AO
ZT or ZI	POSITION TRANSMIT (FEEDBACK) - AI
ZCO or YSO	POSITION CONTROL OPEN - DO
ZCC or YSC	POSITION CONTROL CLOSE - DO
ZSO	POSITION STATUS OPEN - DI
ZSC	POSITION STATUS CLOSE - DI

MOTOR FUNCTION EXAMPLES (aaa)

aaa

HSA or HA	HAND STATUS AUTO (AUTO SIGNAL FROM THE HAND-OFF-AUTO SWITCH) - DI
MCR or YS	MOTOR CONTROL RUN (START) - DO
MSR or YC	MOTOR STATUS RUN - DI
MSF or YA	MOTOR STATUS FAULT (OVERLOAD) - DI
SY or SC	SPEED COMPUTE/CONVERT (CONTROL) - AO
ST or SI	SPEED TRANSMIT (FEEDBACK) - AI
TSH or YA	TEMPERATURE STATUS HIGH (THERMISTOR) - DI
LSH or YA	LEVEL STATUS HIGH (LEAKAGE IN SUBMERSIBLE PUMP SEAL) - DI

EQUIPMENT TAG

LOCALLY MOUNTED INSTRUMENT

PANEL MOUNTED INSTRUMENT

BACK OF PANEL MOUNTED INSTRUMENT

PRESSURE CONTROL VALVE LEGEND (xx)

PCV xx — PRESSURE CONTROL VALVE

SU	SUSTAINING
RD	REDUCING
RL	RELIEVING
SA	SURGE ANTICIPATING
VR	VACUUM RELIEF

ANALYZING ELEMENT/ALARM LEGEND (yy)

AE xx — AIT yy — AIT yy — AIT yy — PROCESS ANALYZER

CL2	CHLORINE
TURB	TURBIDITY
pH	pH
DO	DISSOLVED OXYGEN
CON	CONDUCTIVITY
TEMP	TEMPERATURE
PC	PARTICLE COUNT

BUILDING ANALYZING ELEMENT/ALARM LEGEND

ASy zz — BUILDING ANALYZER

y:

H	HIGH
L	LOW
F	FAULT

zz:

SMK	SMOKE
H_2S	H_2S
CH_4	METHANE
CO	CARBON MONOXIDE

FUNCTION BLOCK

aaa qq / Y XX — SINGLE SIGNAL

HMI

aaa XX
aaa XX
aaa XX
aaa qq / Y XX — MULTIPLE SIGNAL

XX:

AI	ANALOG INPUT
AO	ANALOG OUTPUT
DI	DIGITAL INPUT
DO	DIGITAL OUTPUT

Y:

H	HART
D	DEVICE NET
C	CONTROL NET
M	MODBUS
P	PROFIBUS
E	ETHERNET

qq — PLC IDENTIFIER

INTERLOCK

I x $ — x - INTERLOCK NUMBER (IF APPLICABLE)
$ - INTERLOCK SYSTEM (IE; PLC, DCS, MCC, VFD, ETC.)

I x $ — x - PACKAGE CONTROL INTERFACE
$ - CONTROL SYSTEM TYPE

F — FIRE SYSTEM

S — SECURITY MONITORING SYSTEM

POWER SUPPLY AND PURGE FLUIDS LEGEND

AS	AIR SUPPLY	HS	HYDRAULIC SUPPLY
IS	INSTRUMENT AIR SUPPLY	NS	NITROGEN SUPPLY
PS	PLANT AIR SUPPLY	SS	STEAM SUPPLY
ES	ELECTRICAL SUPPLY	WS	WATER SUPPLY
GS	GAS SUPPLY		

SIGNAL TYPES

PNEUMATIC SIGNAL

ELECTRICAL SIGNAL

HYDRAULIC SIGNAL

CAPILLARY TUBING (FILLED SYSTEM)

ELECTRO MAGNETIC OR SONIC SIGNAL (GUIDED)

ELECTRO MAGNETIC OR SONIC SIGNAL (NOT GUIDED)

INTERNAL SYSTEM LINK (SOFTWARE OR DATA LINK)

MECHANICAL LINK

FUNCTION SYMBOLS

XY XY

K	PROPORTIONAL	A/D	ANALOG TO DIGITAL
√	SQUARE ROOT EXTRACTOR	I/P	CURRENT TO PNEUMATIC CONVERTER
>	HIGH SELECTOR	P/I	PNEUMATIC TO CURRENT TRANSDUCER
<	LOW SELECTOR	E/P	VOLT TO PNEUMATIC TRANSDUCER
÷	DIVIDE	E/I	VOLT TO CURRENT TRANSDUCER
X	MULTIPLY	MV/I	MILLIVOLT TO CURRENT TRANSDUCER
Σ	SUMMATION	I/I	CURRENT TO CURRENT TRANSDUCER
Δ	DIFFERENCE	f(x)	NON-LINEAR OR UNSPECIFIED FUNCTION
±	BIAS	f(t)	FUNCTION OF TIME
X^n	EXPONENTIAL	REV	REVERSE
⊥	HIGH LIMITING	A/M	AUTO MANUAL
∫	INTEGRAL	AVG	AVERAGE
d/dt	DERIVATIVE		

NOTES:

1. ALL ELEVATIONS AND STATIONS ARE IN METERS UNLESS NOTED OTHERWISE. ALL DIMENSIONS AND PIPE SIZES ARE IN MILLIMETERS UNLESS NOTED OTHERWISE.
2. ALL ITEMS SHOWN IN BOLD INDICATE WORK TO BE DONE. ALL ITEMS SHOWN IN LIGHT INDICATE EXISTING CONDITIONS. ALL ITEMS SHOWN IN LIGHT/DASHED INDICATE FUTURE WORK AND EQUIPMENT.

THIS DRAWING MAY HAVE BEEN MODIFIED FROM ITS ORIGINAL SIZE. ALL SCALE NOTATIONS INDICATED ARE BASED ON 11"x17" FORMAT DRAWINGS

ISSUE	YY-MM-DD	REVISION
2	21-01-15	FOR CONSTRUCTION
1	20-10-15	FOR TENDER

Association of Professional Engineers & Geoscientists of Saskatchewan
CERTIFICATE OF AUTHORIZATION
MPE Engineering Ltd.
Number C1334
Permission to Consult held by:

Discipline	Sk. Reg. No.	Signature
CIVIL	52866	

PROFESSIONAL ENGINEER — KASOBO — MEMBER 52866 — 2021-01-18 YR. MN. DAY — SASKATCHEWAN

MPE Engineering Ltd.

ENGLISH RIVER ENTERPRISES PROPERTY MANAGEMENT LP

WASTEWATER TREATMENT PLANT
PROCESS
INSTRUMENTATION LEGEND

DESIGNED	I.K.	JOB	7603-002-00
DRAWN	L.J.S.	SCALE	NTS
DATE	NOVEMBER 2020	DRAWING	P0.3

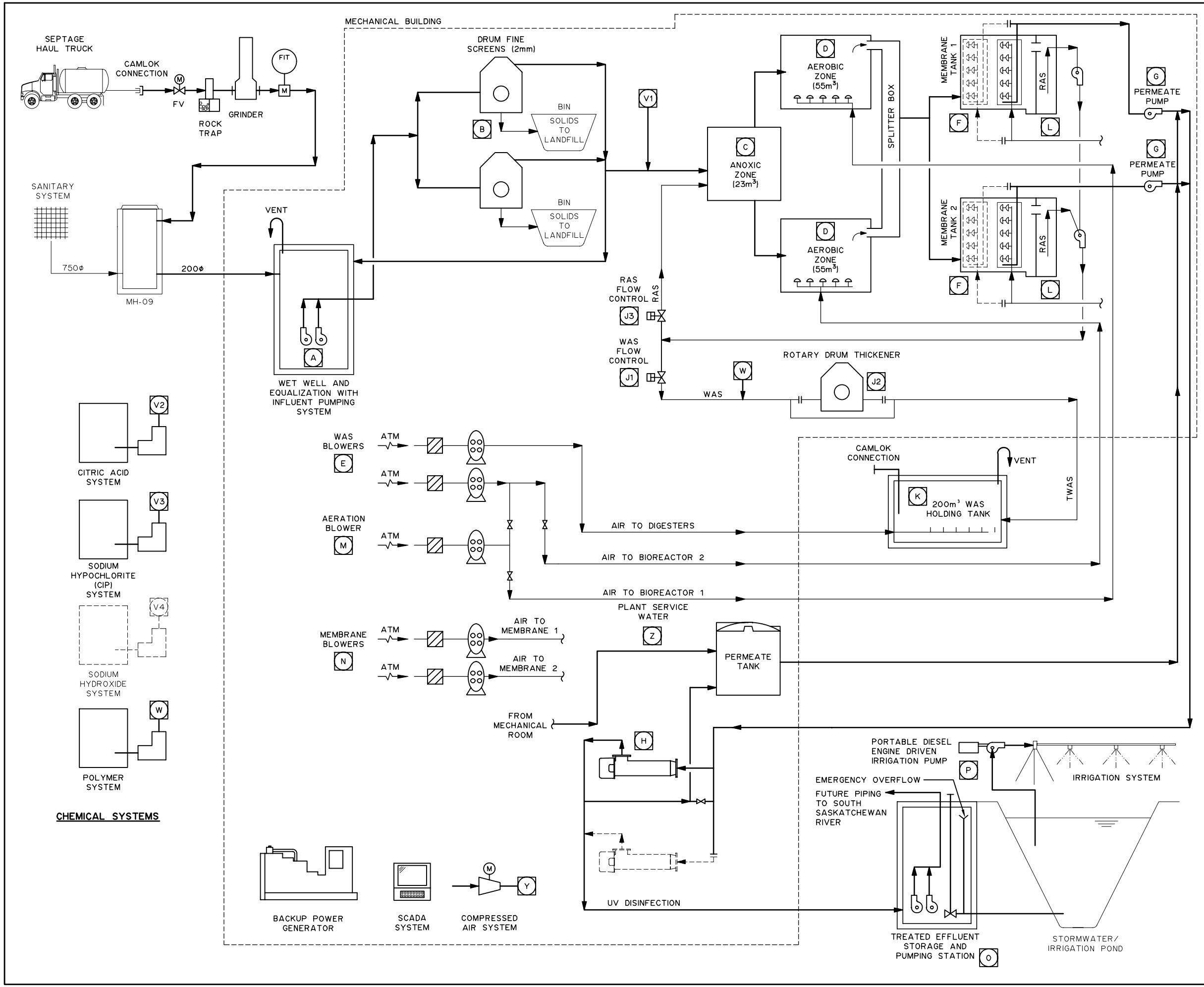

TAG	DESCRIPTION	DESIGN	UNITS
A	INFLUENT PUMPING	580 6.7	m³/DAY L/sec
B	FINE SCREENING (2mm)	580 6.7	m³/DAY L/sec
C	BIOREACTOR ANOXIC	23	m³
D	BIOREACTOR AEROBIC	55	m³/TRAIN
E	WAS BLOWER	65	CFM
F	MBR AVG DAY FLOW MBR MAX MONTH FLOW (N-1) PEAK HYDRAULIC	190 374 580	m³/DAY m³/DAY m³/DAY
G	PERMEATE PUMPING	580	m³/DAY
H	UV DISINFECTION TREATMENT FUTURE HYDRAULIC	374 580	m³/DAY m³/DAY
I	-		
J	(1) WAS FLOW CONTROL (2) ROTARY DRUM THICKENER (3) RAS FLOW CONTROL	7.29 7.29 2273	m³/DAY m³/DAY m³/DAY
K	SLUDGE STORAGE	100	m³
L	RAS PUMPING	2273	m³/DAY
M	AERATION BLOWER SYSTEM	187 EA	CFM
N	MEMBRANE BLOWERS (EA)	122	CFM
O	EFFLUENT PUMPING SYSTEM	7	L/sec
P	IRRIGATION PUMPING SYSTEM	7	L/sec
V1	ALUM SYSTEM	1.2	L/hr
V2	CITRIC ACID SYSTEM (CIP)	45	L/hr
V3	SODIUM HYPOCHLORITE (CIP)	116	L/hr
V4	SODIUM HYDROXIDE SYSTEM	-	L/hr
W	POLYMER FEED SYSTEM	-	L/hr
Y	COMPRESSED AIR SYSTEM	--	SCFM
Z	PLANT SERVICE WATER	--	L/sec

THIS DRAWING MAY HAVE BEEN MODIFIED FROM ITS ORIGINAL SIZE. ALL SCALE NOTATIONS INDICATED ARE BASED ON 11"x17" FORMAT DRAWINGS

ISSUE	YY-MM-DD	REVISION
2	21-01-15	FOR CONSTRUCTION
1	20-10-15	FOR TENDER

Association of Professional Engineers & Geoscientists of Saskatchewan
CERTIFICATE OF AUTHORIZATION
MPE Engineering Ltd.
Number C1334
Permission to Consult held by:

Discipline	Sk. Reg. No.	Signature
CIVIL	52866	

PROFESSIONAL ENGINEER
KAGORE
MEMBER
2021-01-18
YR. MN. DAY
SASKATCHEWAN

MPE Engineering Ltd.

ENGLISH RIVER ENTERPRISES PROPERTY MANAGEMENT LP

WASTEWATER TREATMENT PLANT
PROCESS PIPING
PROCESS FLOW DIAGRAM
OVERVIEW

DESIGNED	I.K.	JOB	7603-002-00
DRAWN	L.J.S.	SCALE	NTS
DATE	NOVEMBER 2020	DRAWING	P0.4

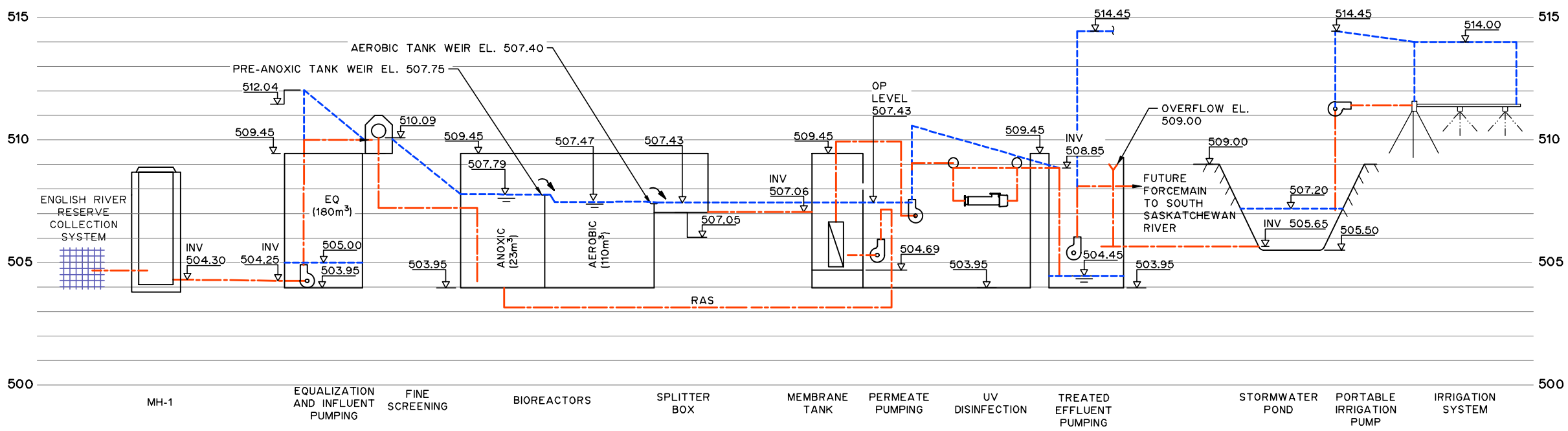

SCENARIO L1: PHASE 1 ADF HYDRAULIC PROFILE

CURRENT ADF =3.3 L/sec (282 m^3/day) {HEADWORKS / MEMBRANES / UV}
RAS FLOW =10.0 L/sec (866 m^3/day) {BIOREACTOR / MEMBRANE INFLUENT CHANNEL}
@ADF FLOW

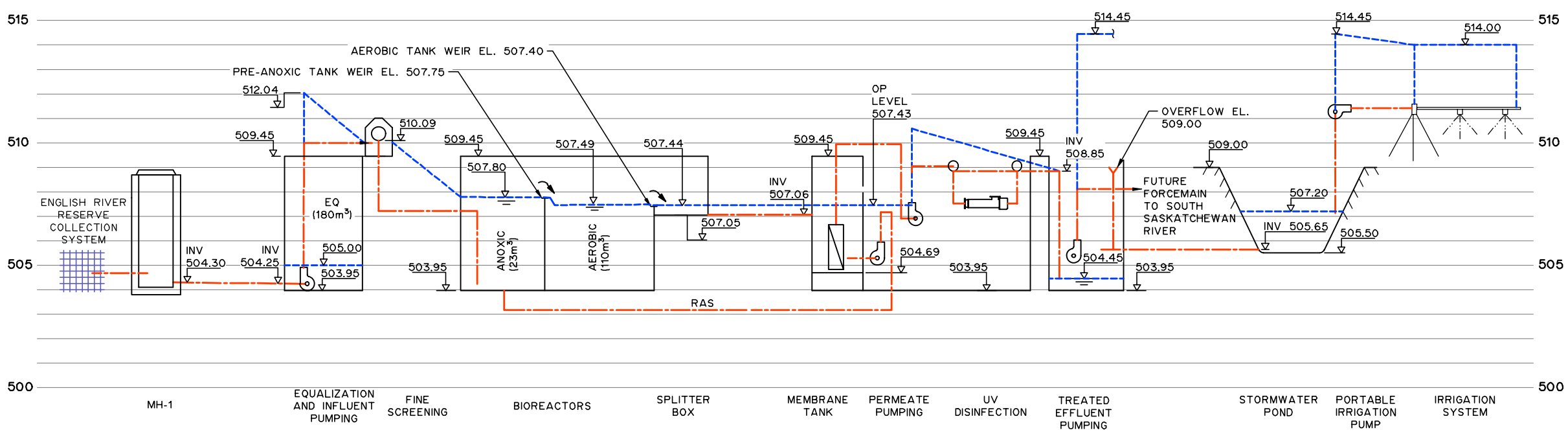

SCENARIO L2: PHASE 1 MMF HYDRAULIC PROFILE

CURRENT MMF =4.4 L/sec (376 m^3/day) {HEADWORKS / MEMBRANES / UV}
RAS FLOW =15.7 L/sec (1355 m^3/day) {BIOREACTOR / MEMBRANE INFLUENT CHANNEL}
@MMF FLOW

LEGEND

- PIPE NETWORK
- STRUCTURE
- HYDRAULIC PROFILE (LIQUID)

THIS DRAWING MAY HAVE BEEN MODIFIED FROM ITS ORIGINAL SIZE. ALL SCALE NOTATIONS INDICATED ARE BASED ON 11"x17" FORMAT DRAWINGS

ISSUE	YY-MM-DD	REVISION
2	21-01-15	FOR CONSTRUCTION
1	20-10-15	FOR TENDER

Association of Professional Engineers & Geoscientists of Saskatchewan
CERTIFICATE OF AUTHORIZATION
MPE Engineering Ltd.
Number C1334
Permission to Consult held by:

Discipline	Sk. Reg. No.	Signature
CIVIL	52866	

PROFESSIONAL ENGINEER — I. KASOBO — MEMBER 52866 — 2021-01-18 YR. MN. DAY — SASKATCHEWAN

MPE Engineering Ltd.

ENGLISH RIVER ENTERPRISES PROPERTY MANAGEMENT LP

WASTEWATER TREATMENT PLANT
PROCESS PIPING
HYDRAULIC PROFILES
PHASE 1
LIQUID STREAM

DESIGNED	I.K.	JOB	7603-002-00
DRAWN	L.J.S.	SCALE	NTS
DATE	NOVEMBER 2020	DRAWING	P0.5

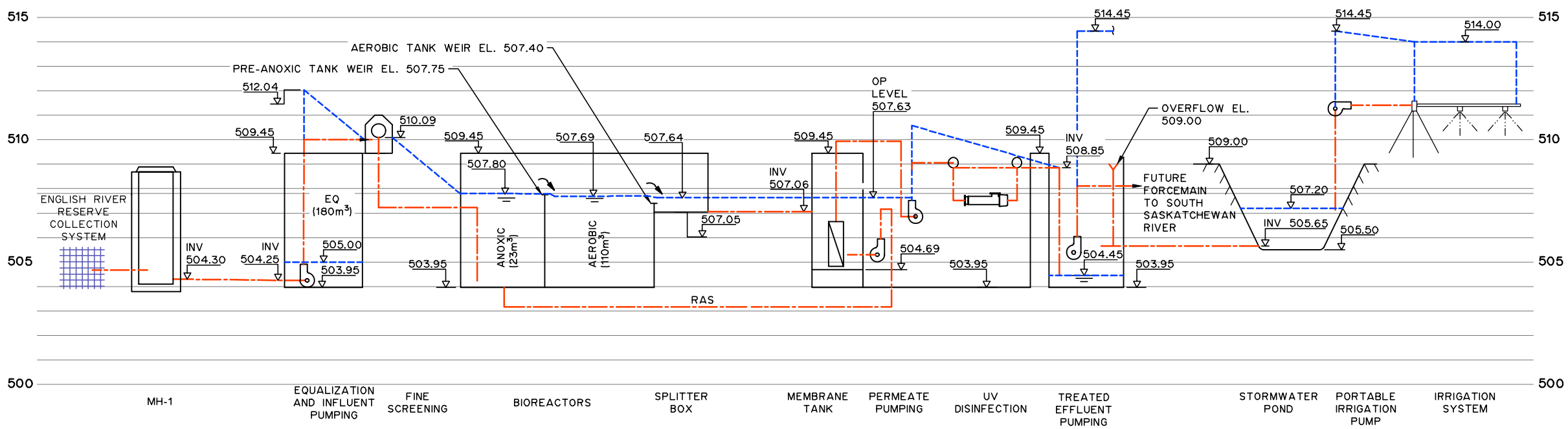

SCENARIO L3: PHASE 2 ADF HYDRAULIC PROFILE

CURRENT ADF =3.3 L/sec (288 m³/day) {HEADWORKS / MEMBRANES / UV}
RAS FLOW =16.08 L/sec (1390 m³/day) {BIOREACTOR / MEMBRANE INFLUENT CHANNEL}
@ADF FLOW

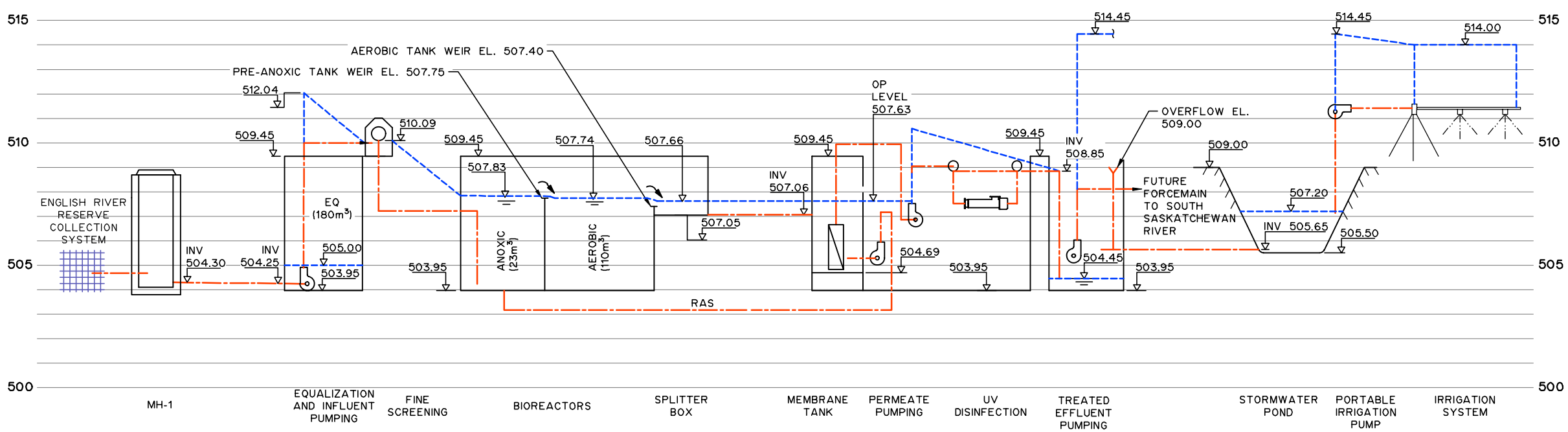

SCENARIO L4: PHASE 2 MMF HYDRAULIC PROFILE

CURRENT MMF =XX L/sec (432 m³/day) {HEADWORKS / MEMBRANES / UV}
RAS FLOW =XX L/sec (2011 m³/day) {BIOREACTOR / MEMBRANE INFLUENT CHANNEL}
@MMF FLOW

LEGEND

- PIPE NETWORK
- STRUCTURE
- HYDRAULIC PROFILE (LIQUID)

THIS DRAWING MAY HAVE BEEN MODIFIED FROM ITS ORIGINAL SIZE. ALL SCALE NOTATIONS INDICATED ARE BASED ON 11"x17" FORMAT DRAWINGS

ISSUE	YY-MM-DD	REVISION
2	21-01-15	FOR CONSTRUCTION
1	20-10-15	FOR TENDER

Association of Professional Engineers & Geoscientists of Saskatchewan
CERTIFICATE OF AUTHORIZATION
MPE Engineering Ltd.
Number C1334
Permission to Consult held by:

Discipline	Sk. Reg. No.	Signature
CIVIL	52866	

PROFESSIONAL ENGINEER
KASOBA
MEMBER 52866
2021-01-18
YR. MN. DAY
SASKATCHEWAN

MPE Engineering Ltd.

ENGLISH RIVER ENTERPRISES PROPERTY MANAGEMENT LP

WASTEWATER TREATMENT PLANT
PROCESS PIPING
HYDRAULIC PROFILES
PHASE 2
LIQUID STREAM

DESIGNED	I.K.	JOB	7603-002-00
DRAWN	L.J.S.	SCALE	NTS
DATE	NOVEMBER 2020	DRAWING	P0.6

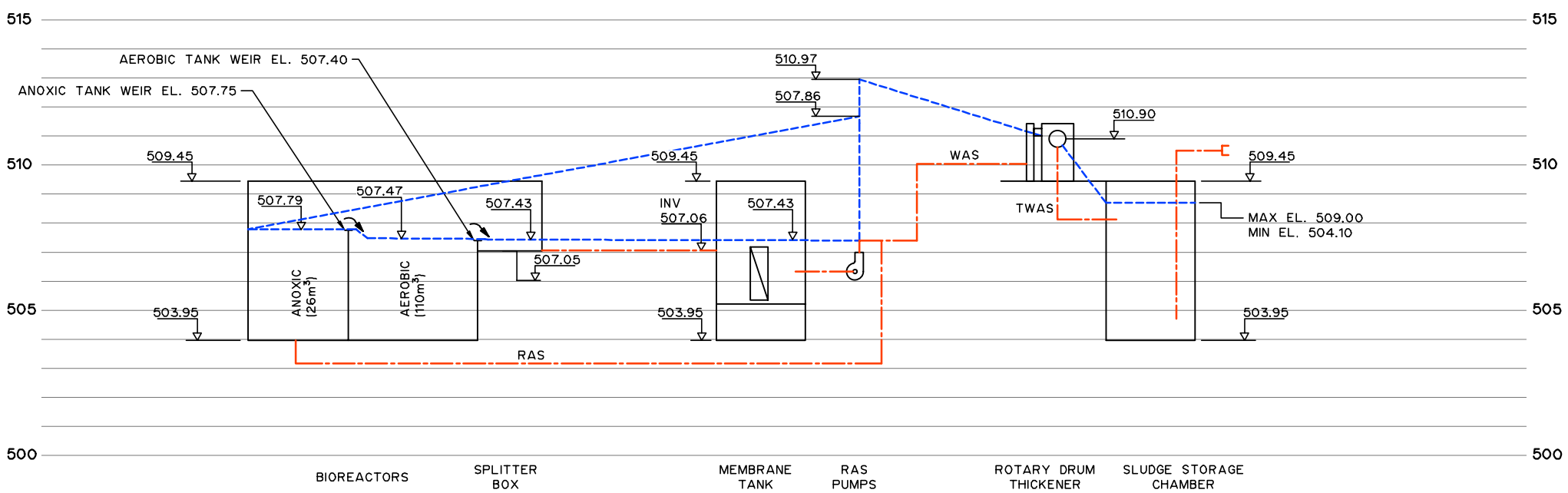

SCENARIO S1: PHASE 1 ADF HYDRAULIC PROFILE

RAS ADF	=13.1 L/sec	(1128 m^3/day)	{BIOREACTOR / MEMBRANE INFLUENT CHANNEL}
WAS ADF	=0.08 L/sec	(7.1 m^3/day)	{ROTARY DRUM THICKENER / SLUDGE STORAGE}

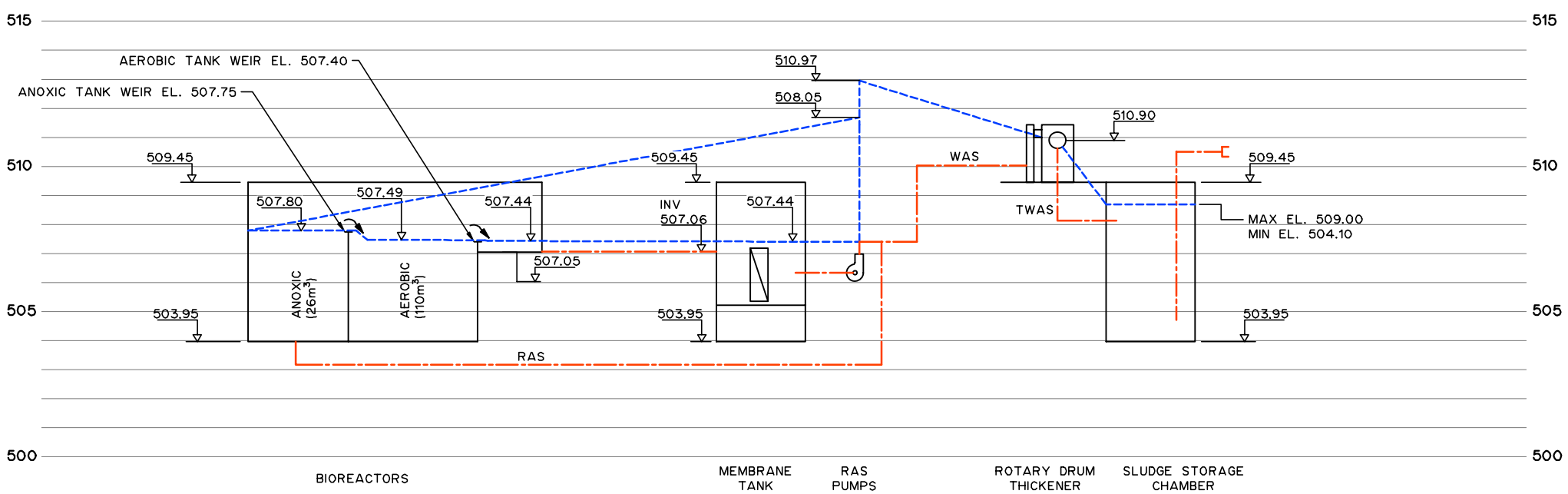

SCENARIO S2: PHASE 1 MMF HYDRAULIC PROFILE

RAS MMF	=17.4 L/sec	(1504 m^3/day)	{BIOREACTOR / MEMBRANE INFLUENT CHANNEL}
WAS MMF	=0.09 L/sec	(7.6 m^3/day)	{ROTARY DRUM THICKENER / SLUDGE STORAGE}

LEGEND

- PIPE NETWORK
- STRUCTURE
- HYDRAULIC PROFILE (SOLID)

THIS DRAWING MAY HAVE BEEN MODIFIED FROM ITS ORIGINAL SIZE. ALL SCALE NOTATIONS INDICATED ARE BASED ON 11"x17" FORMAT DRAWINGS

ISSUE	YY-MM-DD	REVISION
2	21-01-15	FOR CONSTRUCTION
1	20-10-15	FOR TENDER

Association of Professional Engineers & Geoscientists of Saskatchewan
CERTIFICATE OF AUTHORIZATION
MPE Engineering Ltd.
Number C1334
Permission to Consult held by:

Discipline	Sk. Reg. No.	Signature
CIVIL	52866	

PROFESSIONAL ENGINEER
I. KASOBO
MEMBER 52866
2021-01-18
YR. MN. DAY
SASKATCHEWAN

MPE Engineering Ltd.

ENGLISH RIVER ENTERPRISES PROPERTY MANAGEMENT LP

WASTEWATER TREATMENT PLANT
PROCESS PIPING
HYDRAULIC PROFILES
PHASE 1
SOLID STREAM

DESIGNED	I.K.	JOB	7603-002-00
DRAWN	L.J.S.	SCALE	NTS
DATE	NOVEMBER 2020	DRAWING	P0.7

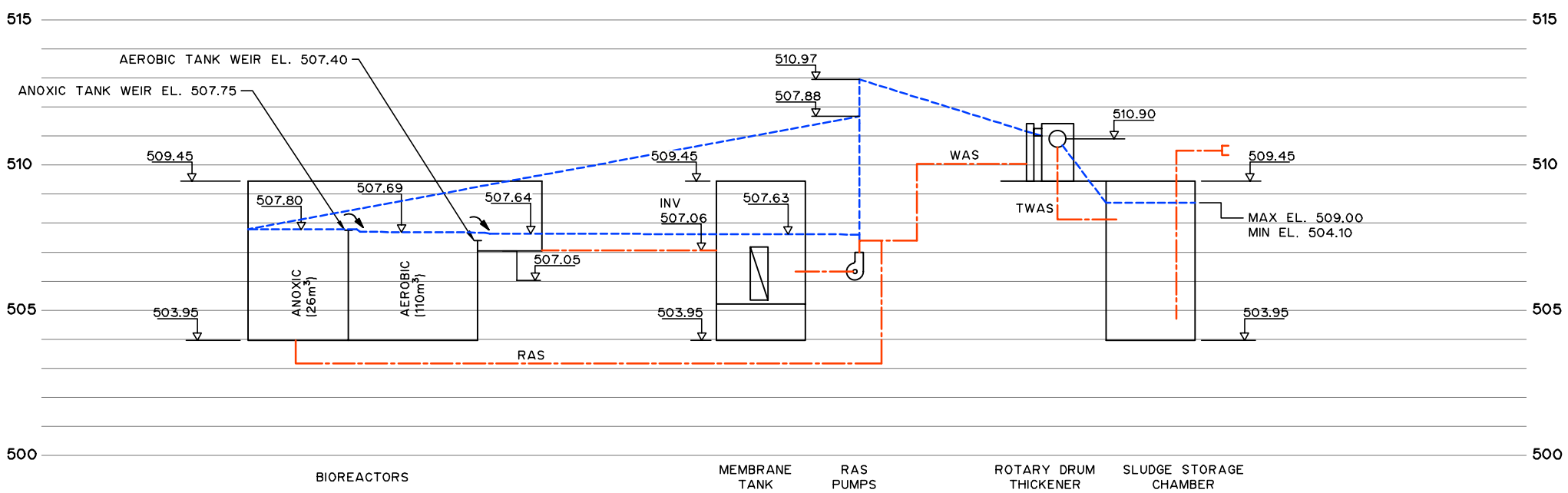

SCENARIO S3: PHASE 2 ADF HYDRAULIC PROFILE

RAS ADF =13.3 L/sec (1151 m^3/day) {BIOREACTOR / MEMBRANE INFLUENT CHANNEL}
WAS ADF =0.12 L/sec (10.2 m^3/day) {ROTARY DRUM THICKENER / SLUDGE STORAGE}

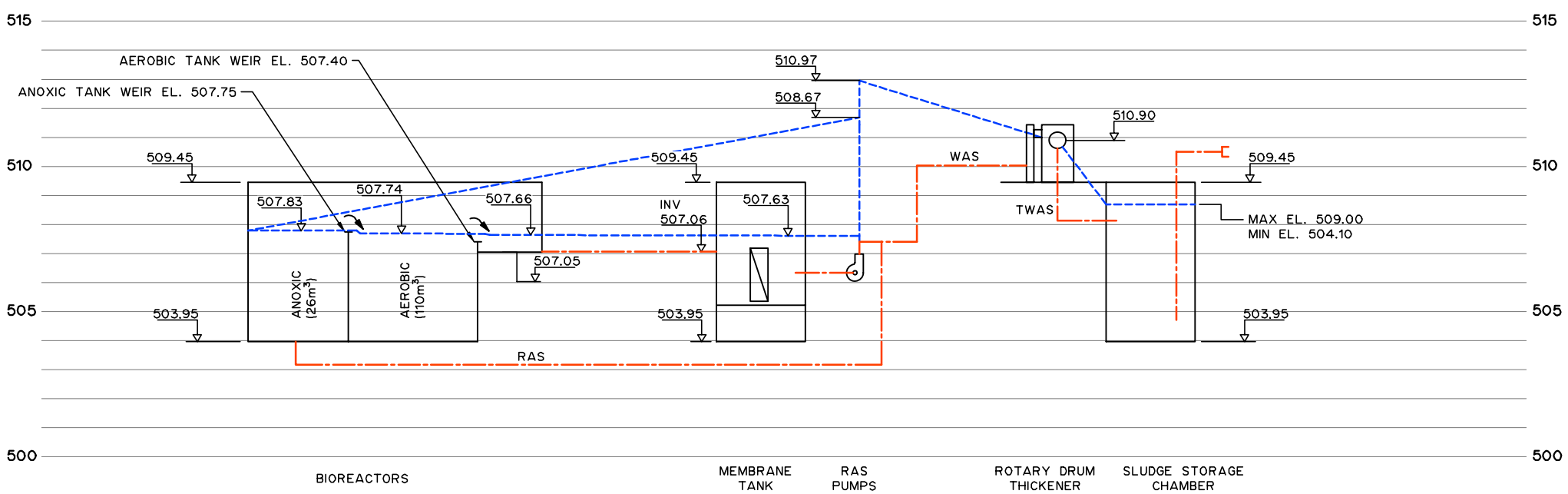

SCENARIO S4: PHASE 2 MMF HYDRAULIC PROFILE

RAS MMF =25 L/sec (2160 m^3/day) {BIOREACTOR / MEMBRANE INFLUENT CHANNEL}
WAS MMF =0.13 L/sec (10.9 m^3/day) {ROTARY DRUM THICKENER / SLUDGE STORAGE}

LEGEND

- PIPE NETWORK
- STRUCTURE
- HYDRAULIC PROFILE (SOLID)

THIS DRAWING MAY HAVE BEEN MODIFIED FROM ITS ORIGINAL SIZE. ALL SCALE NOTATIONS INDICATED ARE BASED ON 11"x17" FORMAT DRAWINGS

ISSUE	YY-MM-DD	REVISION
2	21-01-15	FOR CONSTRUCTION
1	20-10-15	FOR TENDER

Association of Professional Engineers & Geoscientists of Saskatchewan
CERTIFICATE OF AUTHORIZATION
MPE Engineering Ltd.
Number C1334
Permission to Consult held by:

Discipline	Sk. Reg. No.	Signature
CIVIL	52866	

PROFESSIONAL ENGINEER
I. KASOBA
MEMBER 52866
2021-01-18
YR. MN. DAY
SASKATCHEWAN

MPE Engineering Ltd.

ENGLISH RIVER ENTERPRISES PROPERTY MANAGEMENT LP

WASTEWATER TREATMENT PLANT
PROCESS PIPING
HYDRAULIC PROFILES
PHASE 2
SOLID STREAM

DESIGNED	I.K.	JOB	7603-002-00
DRAWN	L.J.S.	SCALE	NTS
DATE	NOVEMBER 2020	DRAWING	P0.8

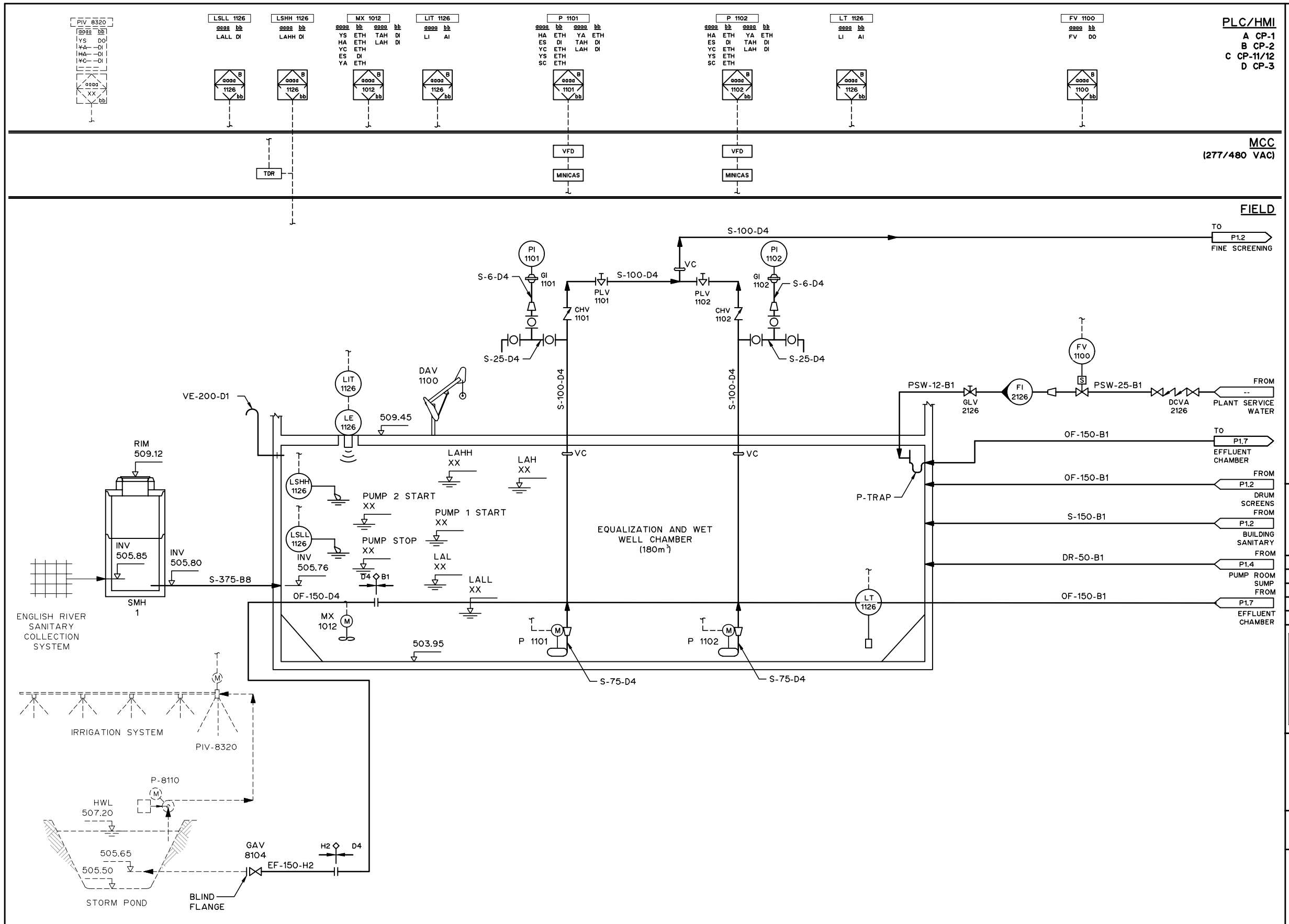

NOTES:

1. FOR INFORMATION REGARDING GENERAL NOTES, UTILITIES, ABBREVIATIONS AND SYMBOLS, REFER TO THE LEGEND DRAWINGS.

THIS DRAWING MAY HAVE BEEN MODIFIED FROM ITS ORIGINAL SIZE. ALL SCALE NOTATIONS INDICATED ARE BASED ON 11"x17" FORMAT DRAWINGS

ISSUE	YY-MM-DD	REVISION
2	21-01-15	FOR CONSTRUCTION
1	20-10-15	FOR TENDER

Association of Professional Engineers & Geoscientists of Saskatchewan
CERTIFICATE OF AUTHORIZATION
MPE Engineering Ltd.
Number C1334
Permission to Consult held by:

Discipline	Sk. Reg. No.	Signature
CIVIL	52866	

PROFESSIONAL ENGINEER — KAGORO — MEMBER 52866 — 2021-01-18 YR. MN. DAY — SASKATCHEWAN

MPE Engineering Ltd.

ENGLISH RIVER ENTERPRISES PROPERTY MANAGEMENT LP

WASTEWATER TREATMENT PLANT
PROCESS PIPING
PROCESS AND INSTRUMENTATION DIAGRAM
INFLUENT PUMPING STATION

DESIGNED	I.K.	JOB	7603-002-00
DRAWN	L.J.S.	SCALE	NTS
DATE	NOVEMBER 2020	DRAWING	P1.1

DESIGN CRITERIA

PIV-8320
- IRRIGATION PIVOT
- POWER REQUIREMENT
- 8 MOTORS EACH 34 RPM, 0.6HP
- 575VAC/3PH/60Hz

P-8110
- PORTABLE IRRIGATION PUMP
- DUTY POINT: 15.0 L/s @ 35m
- ENGINE DRIVEN

LIT 1126
- RANGE: 0-10 m
- POWER: 120 VAC

MX 1012
- SUBMERSIBLE MIXER
- 2.4 HP, 1675 RPM
- 575 VAC/3 PH/60 HZ

P1101/1102
- SEWAGE PUMP
- DUTY POINT: 8.22 L/s @ 8.16m
- 2.7 HP, 1160 RPM
- 575 VAC/3 PH/60 HZ

LT 1126
- RANGE: 0-10 m
- POWER: 24 VDC

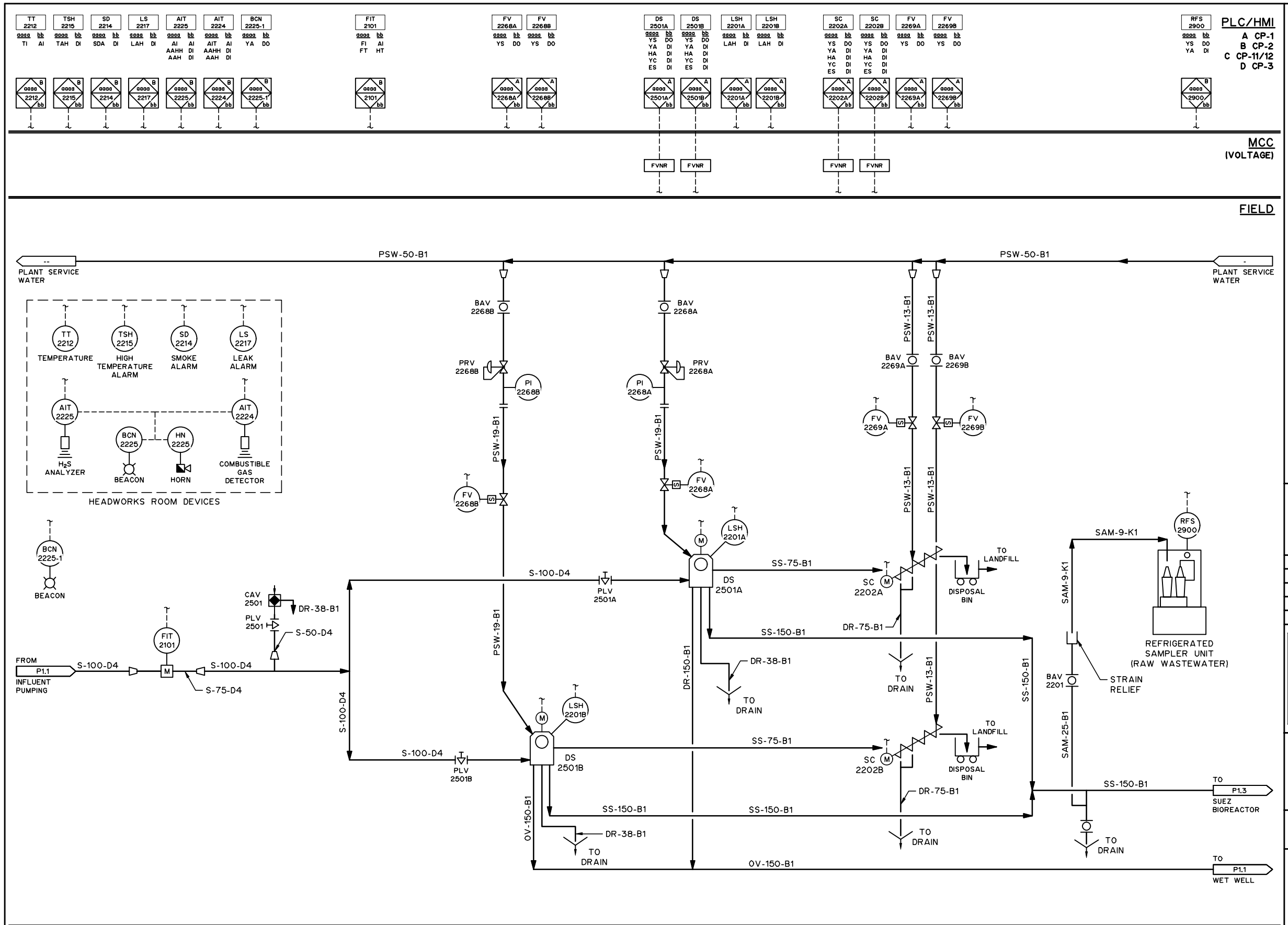

NOTES:

1. FOR INFORMATION REGARDING GENERAL NOTES, UTILITIES, ABBREVIATIONS AND SYMBOLS, REFER TO THE LEGEND DRAWINGS.

THIS DRAWING MAY HAVE BEEN MODIFIED FROM ITS ORIGINAL SIZE. ALL SCALE NOTATIONS INDICATED ARE BASED ON 11"x17" FORMAT DRAWINGS

ISSUE	YY-MM-DD	REVISION
2	21-01-15	FOR CONSTRUCTION
1	20-10-15	FOR TENDER

Association of Professional Engineers & Geoscientists of Saskatchewan
CERTIFICATE OF AUTHORIZATION
MPE Engineering Ltd.
Number C1334
Permission to Consult held by:

Discipline	Sk. Reg. No.	Signature
CIVIL	52866	

PROFESSIONAL ENGINEER — KAGORO — MEMBER 52866 — 2021-01-18 YR. MN. DAY — SASKATCHEWAN

MPE Engineering Ltd.

ENGLISH RIVER ENTERPRISES PROPERTY MANAGEMENT LP

WASTEWATER TREATMENT PLANT

PROCESS PIPING

PROCESS AND INSTRUMENTATION DIAGRAM

FINE SCREENING

DESIGNED	I.K.	JOB	7603-002-00
DRAWN	L.J.S.	SCALE	NTS
DATE	NOVEMBER 2020	DRAWING	P1.2

DESIGN CRITERIA

FIT 2101
- FLOW: 0-20 L/sec
- POWER: 24 VDC

DS 2501 A/B
- FINE DRUM SCREEN
- CAPACITY: 7.0 L/sec @ TSS= 250 mg/L
- 7.0 L/sec @ TSS= 117 mg/L
- 0.5 HP
- 575 VAC/3 PH/60 Hz
- WASH WATER: 0.69 L/sec @ 28 m

PRV 2268A/PRV 2268B
- RANGE: 25-75 psig
- SP: 40 psig
- MIN/MAX: 40/60 psi

SC 2202 A/B
- SCREW CONVEYOR
- 0.5 HP
- 575 VAC/3 PH/60 Hz
- WASH WATER: 0.19 L/sec @ 28 m

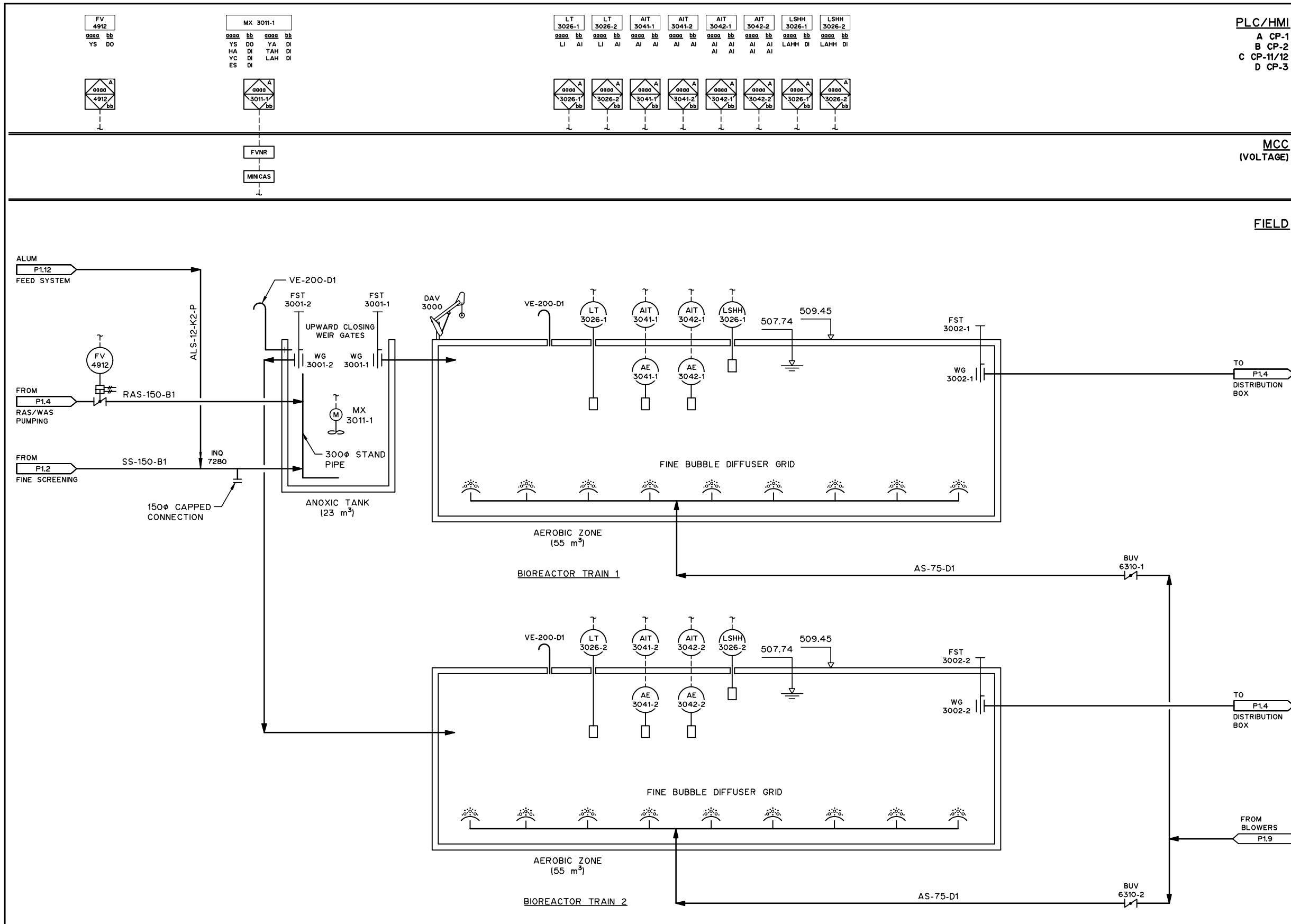

NOTES:

1. FOR INFORMATION REGARDING GENERAL NOTES, UTILITIES, ABBREVIATIONS AND SYMBOLS, REFER TO THE LEGEND DRAWINGS.
2. LSHH 3026-1 AND LSHH 3026-2 TO BE PLACED 300mm BELOW UNDERSIDE OF TANK.
3. INFLUENT AND RAS PIPES SHOULD BE SUBMERGED ⅔ OF THE TOP OF THE TANK OF MAX LEVEL.
4. PROVIDE APPROPRIATE VENTING.

THIS DRAWING MAY HAVE BEEN MODIFIED FROM ITS ORIGINAL SIZE. ALL SCALE NOTATIONS INDICATED ARE BASED ON 11"x17" FORMAT DRAWINGS

ISSUE	YY-MM-DD	REVISION
2	21-01-15	FOR CONSTRUCTION
1	20-10-15	FOR TENDER

Association of Professional Engineers & Geoscientists of Saskatchewan
CERTIFICATE OF AUTHORIZATION
MPE Engineering Ltd.
Number C1334
Permission to Consult held by:

Discipline	Sk. Reg. No.	Signature
CIVIL	52866	

PROFESSIONAL ENGINEER — KAGORO, MBUGUA JOHN — 2021-01-18 YR. MN. DAY — SASKATCHEWAN

MPE Engineering Ltd.

ENGLISH RIVER ENTERPRISES PROPERTY MANAGEMENT LP

WASTEWATER TREATMENT PLANT
PROCESS PIPING
PROCESS AND INSTRUMENTATION DIAGRAM
BIOREACTORS

DESIGNED	I.K.	JOB	7603-002-00
DRAWN	L.J.S.	SCALE	NTS
DATE	NOVEMBER 2020	DRAWING	P1.3

DESIGN CRITERIA

LT 3026-1/LT 3026-2
- RANGE: 0-10 m
- POWER: 24 VDC

MX 3011-1
- SUBMERSIBLE MIXER
- 1.2 HP, 1750 RPM
- 575 VAC/3 PH/60 HZ

AIT 3041-1/AIT 3041-2
- DO METER RANGE: 0-10 mg/L
- TEMP RANGE: 0-50 °C
- POWER: 120 VAC

AIT 3042-1/AIT 3042-2
- PH RANGE: 0-14
- POWER: 120 VAC

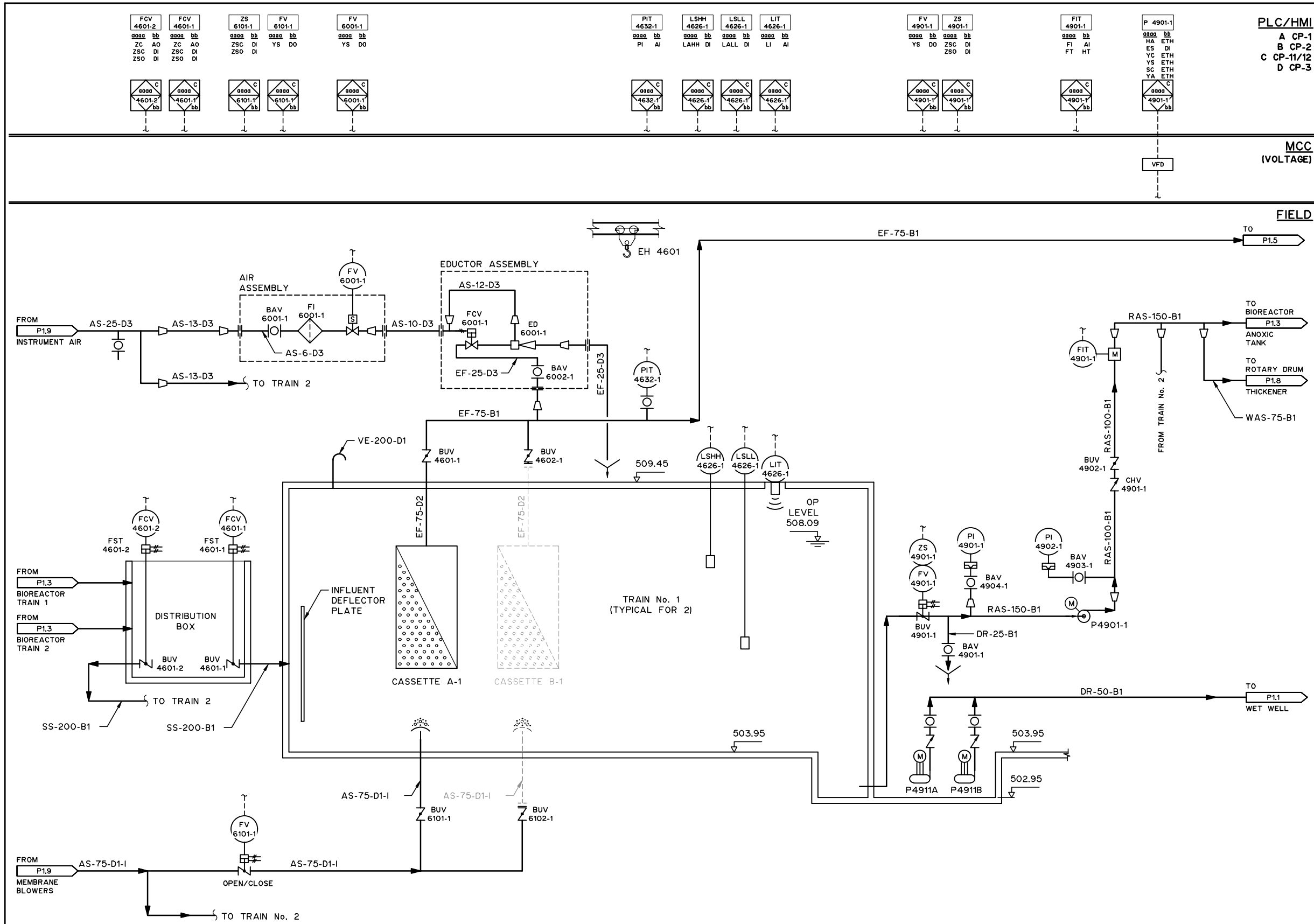

NOTES:

1. FOR INFORMATION REGARDING GENERAL NOTES, UTILITIES, ABBREVIATIONS AND SYMBOLS, REFER TO THE LEGEND DRAWINGS.

THIS DRAWING MAY HAVE BEEN MODIFIED FROM ITS ORIGINAL SIZE. ALL SCALE NOTATIONS INDICATED ARE BASED ON 11"x17" FORMAT DRAWINGS

ISSUE	YY-MM-DD	REVISION
2	21-01-15	FOR CONSTRUCTION
1	20-10-15	FOR TENDER

Association of Professional Engineers & Geoscientists of Saskatchewan
CERTIFICATE OF AUTHORIZATION
MPE Engineering Ltd.
Number C1334
Permission to Consult held by:

Discipline	Sk. Reg. No.	Signature
CIVIL	52866	

PROFESSIONAL ENGINEER — KAGORO, MEMBER — SASKATCHEWAN — 2021-01-18 YR. MN. DAY

MPE Engineering Ltd.

ENGLISH RIVER ENTERPRISES PROPERTY MANAGEMENT LP

WASTEWATER TREATMENT PLANT
PROCESS PIPING
PROCESS AND INSTRUMENTATION DIAGRAM
MEMBRANE TANK

DESIGNED	I.K.	JOB	7603-002-00
DRAWN	L.J.S.	SCALE	NTS
DATE	NOVEMBER 2020	DRAWING	P1.4

DESIGN CRITERIA

EH 4601
- ELECTRIC HOIST
  1 HP/575 VAC/3 PH/60 Hz
- TRACTOR DRIVES
  3 DRIVES
- DRIVE MOTOR
  $\frac{1}{3}$ HP/575 VAC/3 PH/60 Hz

PIT 4632-1/PIT 4632-2
- RANGE: -103 TO 103 kPa (-15 TO 15 PSI)
- POWER: 24 VDC

LIT 4626-1/LIT 4626-2
- RANGE: 0-5 m
- POWER: 24 VDC

P 4901-1/P 4901-2
- RAS PUMP
- DUTY POINT: 23-34 L/sec @ 2.8m
- 7.5 HP, 900 RPM
- 575 VAC/3 PH/60 HZ

FIT 4901-1/FIT 4901-2
- RANGE: 0-30 L/sec
- POWER: 120 VAC

P 4911A/4911B
- SUMP PUMP
- DUTY POINT: 2.8L/s @ 6.1m
- 0.5 HP, 1550 RPM
- 115 VAC/1 PH/60 HZ

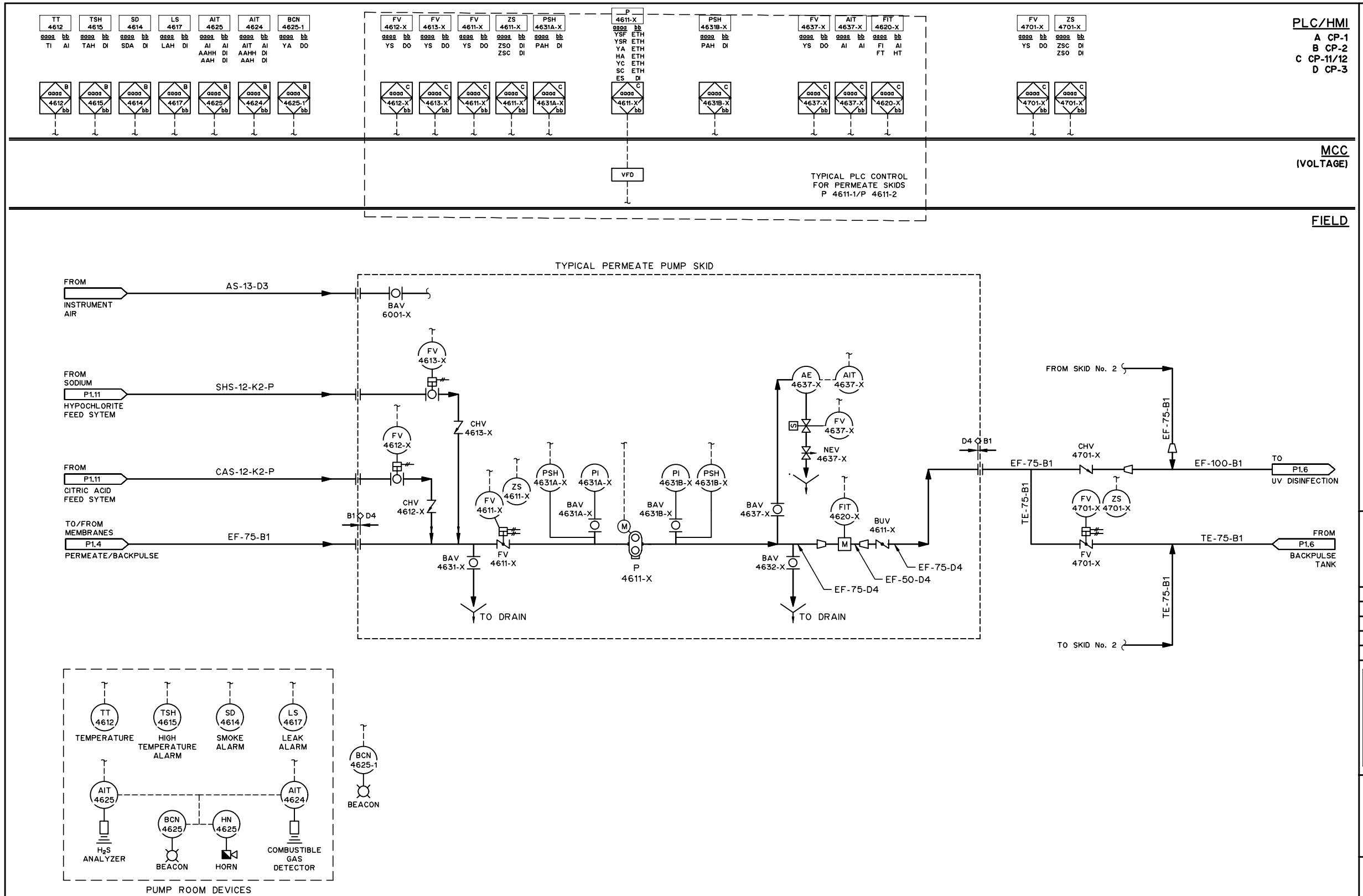

NOTES:

1. FOR INFORMATION REGARDING GENERAL NOTES, UTILITIES, ABBREVIATIONS AND SYMBOLS, REFER TO THE LEGEND DRAWINGS.

THIS DRAWING MAY HAVE BEEN MODIFIED FROM ITS ORIGINAL SIZE. ALL SCALE NOTATIONS INDICATED ARE BASED ON 11"x17" FORMAT DRAWINGS

ISSUE	YY-MM-DD	REVISION
2	21-01-15	FOR CONSTRUCTION
1	20-10-15	FOR TENDER

Association of Professional Engineers & Geoscientists of Saskatchewan
CERTIFICATE OF AUTHORIZATION
MPE Engineering Ltd.
Number C1334
Permission to Consult held by:

Discipline	Sk. Reg. No.	Signature
CIVIL	52866	

PROFESSIONAL ENGINEER L. KAGORO MEMBER 52866 2021-01-18 YR. MN. DAY SASKATCHEWAN

MPE Engineering Ltd.

ENGLISH RIVER ENTERPRISES PROPERTY MANAGEMENT LP

WASTEWATER TREATMENT PLANT
PROCESS PIPING
PROCESS AND INSTRUMENTATION DIAGRAM
PERMEATE PUMPING

DESIGNED	I.K.	JOB	7603-002-00
DRAWN	L.J.S.	SCALE	NTS
DATE	NOVEMBER 2020	DRAWING	P1.5

DESIGN CRITERIA

PSH 4631A-X/4631B-X
- SP: 276 kPa (40 PSI)

P 4611-X
- PERMEATE PUMP
- MIN FLOW: 1.26 L/sec
- MAX FLOW: 14.5 L/sec
- 7.5 HP, 1800 RPM
- 575 VAC/3 PH/60 HZ

FIT 4620-1/FIT 4620-2
- RANGE: 0-20 L/sec
- POWER: 120 VAC

AIT 4637-1/AIT 4637-2
TURBIDITY RANGE: 0-10 NTU

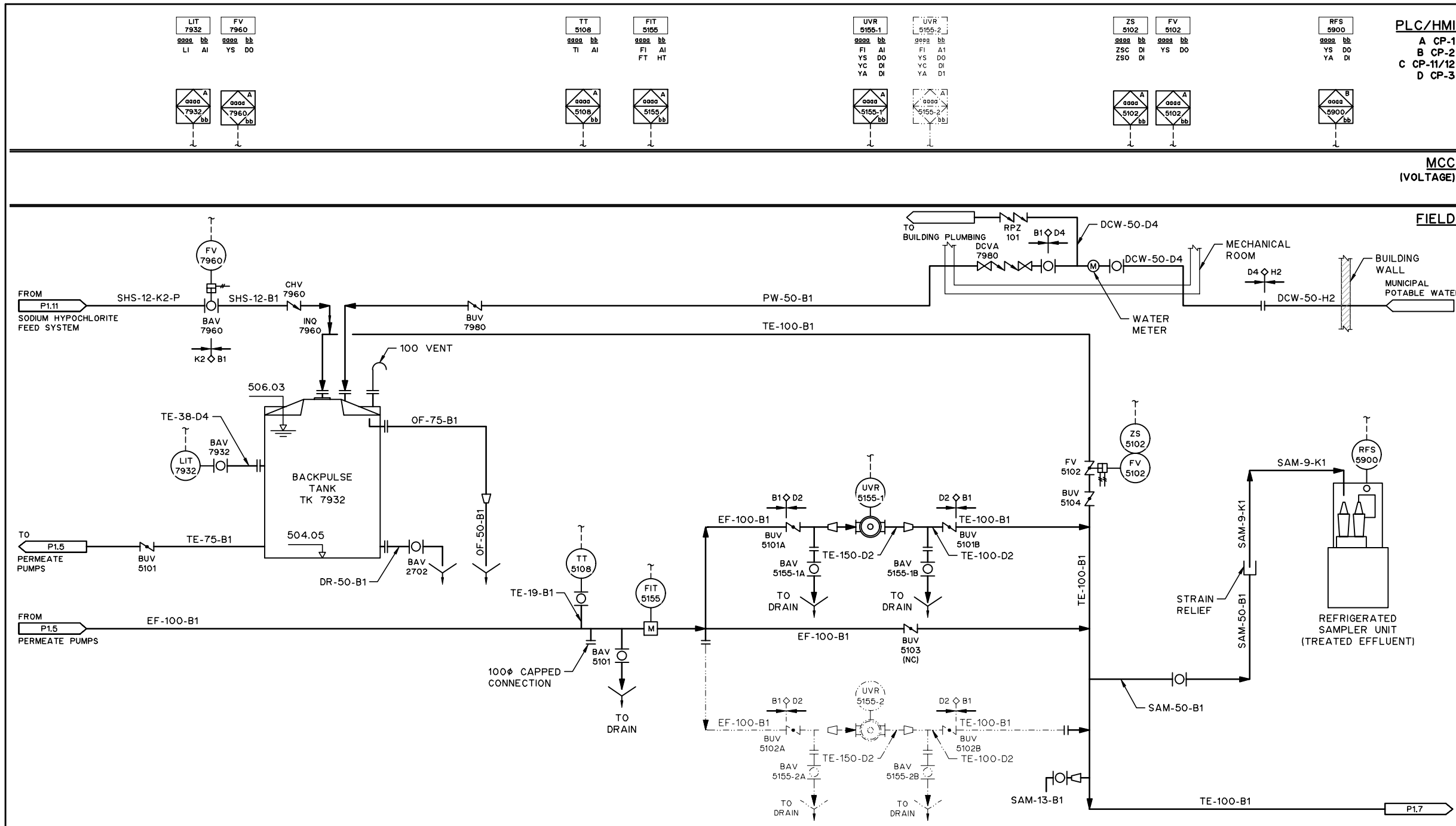

NOTES:

1. FOR INFORMATION REGARDING GENERAL NOTES, UTILITIES, ABBREVIATIONS AND SYMBOLS, REFER TO THE LEGEND DRAWINGS.

THIS DRAWING MAY HAVE BEEN MODIFIED FROM ITS ORIGINAL SIZE. ALL SCALE NOTATIONS INDICATED ARE BASED ON 11"x17" FORMAT DRAWINGS

ISSUE	YY-MM-DD	REVISION
2	21-01-15	FOR CONSTRUCTION
1	20-10-15	FOR TENDER

Association of Professional Engineers & Geoscientists of Saskatchewan
CERTIFICATE OF AUTHORIZATION
MPE Engineering Ltd.
Number C1334
Permission to Consult held by:

Discipline	Sk. Reg. No.	Signature
CIVIL	52866	

PROFESSIONAL ENGINEER — KAGORO, MBAGIEDO-OKEM — 2021-01-18 YR. MN. DAY — SASKATCHEWAN

MPE Engineering Ltd.

ENGLISH RIVER ENTERPRISES PROPERTY MANAGEMENT LP

WASTEWATER TREATMENT PLANT
PROCESS PIPING
PROCESS AND INSTRUMENTATION DIAGRAM
BACKPULSE TANK AND UV DISINFECTION

DESIGNED	I.K.	JOB	7603-002-00
DRAWN	L.J.S.	SCALE	NTS
DATE	NOVEMBER 2020	DRAWING	P1.6

FIT 5155
- RANGE: 0-20 L/s
- POWER: 120 VAC

PRV 7921
- SP: 40 psig

LIT 7932
- RANGE: 0-52 kPa (0-7.5 psi)
- POWER: 24 VDC

TK 7932
- BACKPULSE PERMEATE TANK
- CAPACITY: 15000 L

TT 5108
- RANGE: 0-40°C
- POWER: 24 VDC

UVR 5155-1/UVR 5155-2
- UV REACTOR
- DESIGN DOSE: 44.47 mJ/cm^2
- TREATMENT CAPACITY: 7,700 m^3/DAY
- HYDRAULIC CAPACITY: 11,900 m^3/DAY
- NUMBER OF LAMPS: 4/UNIT
- 208VAC/1 PH
- 13.5 kVA, 10.8 kW

DESIGN CRITERIA

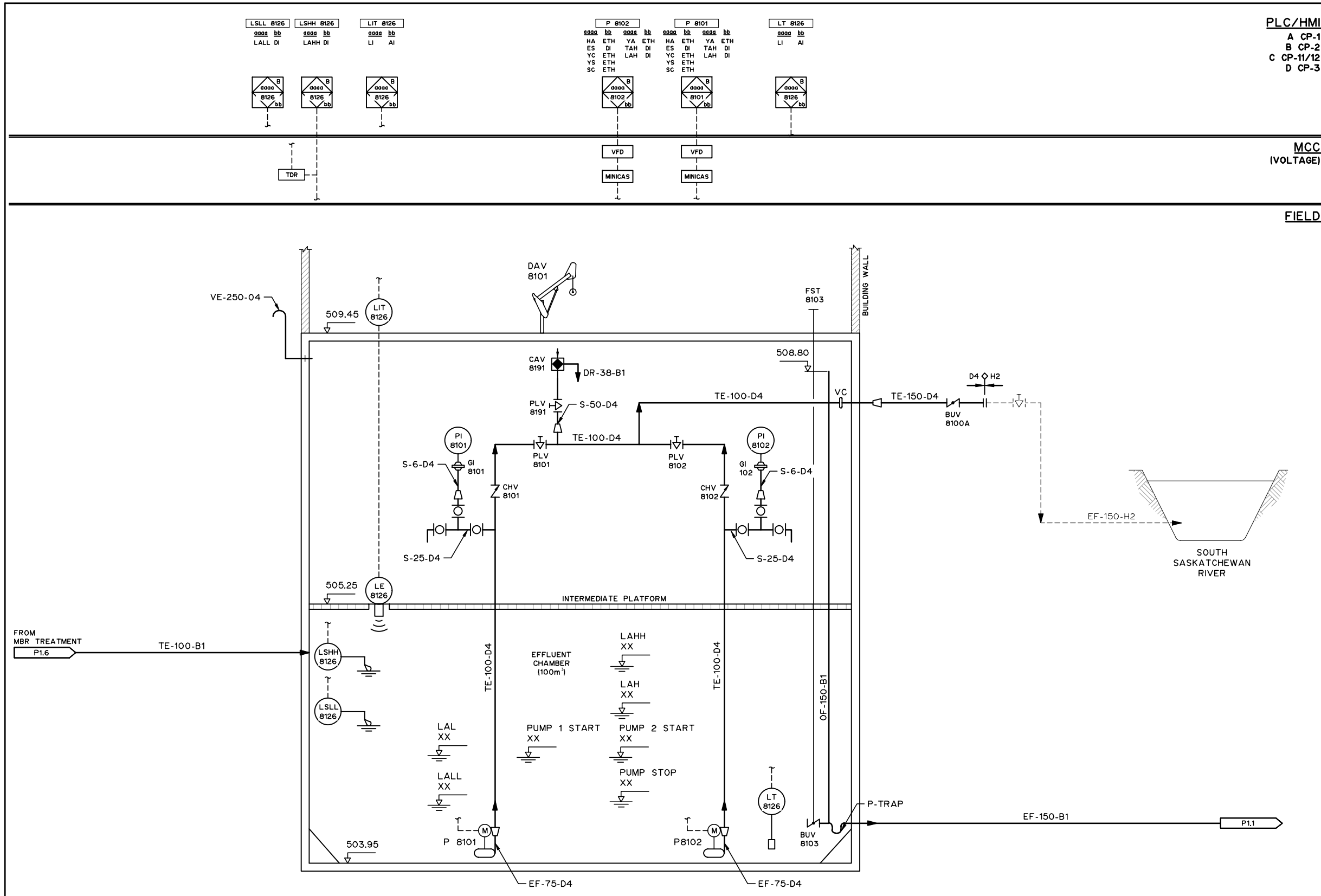

NOTES:

1. FOR INFORMATION REGARDING GENERAL NOTES, UTILITIES, ABBREVIATIONS AND SYMBOLS, REFER TO THE LEGEND DRAWINGS.

THIS DRAWING MAY HAVE BEEN MODIFIED FROM ITS ORIGINAL SIZE. ALL SCALE NOTATIONS INDICATED ARE BASED ON 11"x17" FORMAT DRAWINGS

ISSUE	YY-MM-DD	REVISION
2	21-01-15	FOR CONSTRUCTION
1	20-10-15	FOR TENDER

Association of Professional Engineers & Geoscientists of Saskatchewan
CERTIFICATE OF AUTHORIZATION
MPE Engineering Ltd.
Number C1334
Permission to Consult held by:

Discipline	Sk. Reg. No.	Signature
CIVIL	52866	

PROFESSIONAL ENGINEER — KAGORO, MICHAEL JOHN — 2021-01-18 (YR. MN. DAY) — SASKATCHEWAN

MPE Engineering Ltd.

ENGLISH RIVER ENTERPRISES PROPERTY MANAGEMENT LP

WASTEWATER TREATMENT PLANT
PROCESS PIPING
PROCESS AND INSTRUMENTATION DIAGRAM
EFFLUENT CHAMBER AND PUMPING

DESIGNED	I.K.	JOB	7603-002-00
DRAWN	L.J.S.	SCALE	NTS
DATE	NOVEMBER 2020	DRAWING	P1.7

DESIGN CRITERIA

LIT 8126
- RANGE: 0-10 m
- POWER: 120 VAC

P8101/8102
- SEWAGE PUMP
- DUTY POINT: 7.0 L/s @ 12.08m
- 2.7 HP, 1160 RPM
- 575 VAC/3 PH/60 HZ

LT 8126
- RANGE: 0-10 m
- POWER: 24 VDC

- P-8110
- PORTABLE IRRIGATION PUMP
- DUTY POINT: 15.0 L/s @ 35m
- ENGINE DRIVEN

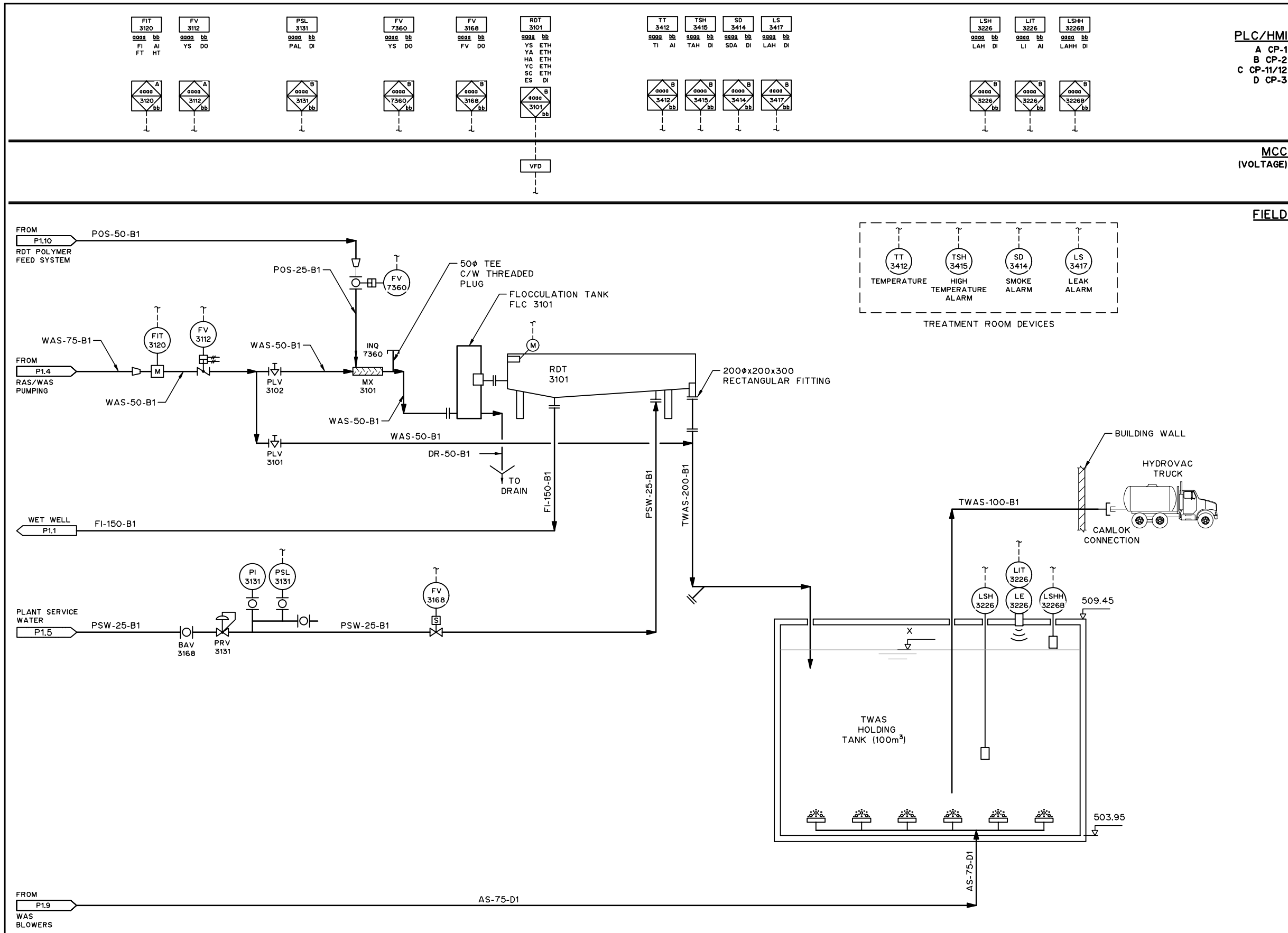

DESIGN CRITERIA

FIT 3120
- RANGE: 0-342 L/hr
- POWER: 120 VAC

MX 3101
-

RDT 3101
- ROTARY DRUM THICKENER
- CAPACITY: 3.2 m^3/hr (25 USGPM) @1% TS (57.2 kg/hr DRY)
- 1/3 HP 1750 RPM
- 575 VAC/3 PH/60 Hz
- TEFC

PRV 3131
- RANGE: 25-75 psig
- SP: 50 psig

PSL 3131
- SP: 35 psig
- RANGE: 0-100 psi

LIT 3226
- RANGE: 0-10 m
- POWER: 24 VDC

NOTES:

1. FOR INFORMATION REGARDING GENERAL NOTES, UTILITIES, ABBREVIATIONS AND SYMBOLS, REFER TO THE LEGEND DRAWINGS.

THIS DRAWING MAY HAVE BEEN MODIFIED FROM ITS ORIGINAL SIZE. ALL SCALE NOTATIONS INDICATED ARE BASED ON 11"x17" FORMAT DRAWINGS

ISSUE	YY-MM-DD	REVISION
2	21-01-15	FOR CONSTRUCTION
1	20-10-15	FOR TENDER

Association of Professional Engineers & Geoscientists of Saskatchewan
CERTIFICATE OF AUTHORIZATION
MPE Engineering Ltd.
Number C1334
Permission to Consult held by:

Discipline	Sk. Reg. No.	Signature
CIVIL	52866	

PROFESSIONAL ENGINEER — KASOBA, MEMBER 52866 — 2021-01-18 (YR. MN. DAY) — SASKATCHEWAN

MPE Engineering Ltd.

ENGLISH RIVER ENTERPRISES PROPERTY MANAGEMENT LP

WASTEWATER TREATMENT PLANT
PROCESS PIPING
PROCESS AND INSTRUMENTATION DIAGRAM
SLUDGE THICKENING AND HOLDING TANK

DESIGNED	I.K.	JOB	7603-002-00
DRAWN	L.J.S.	SCALE	NTS
DATE	NOVEMBER 2020	DRAWING	P1.8

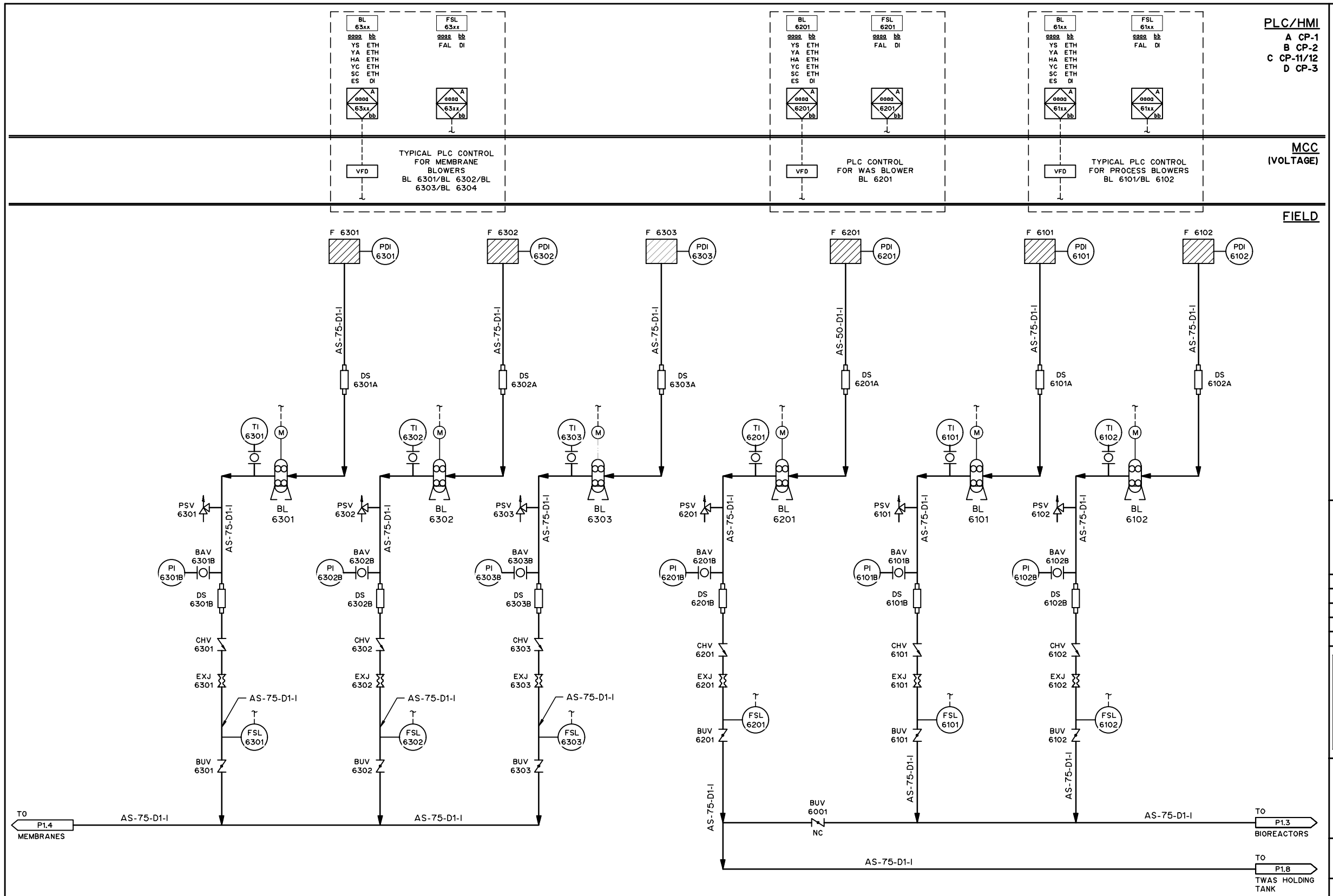

NOTES:

1. FOR INFORMATION REGARDING GENERAL NOTES, UTILITIES, ABBREVIATIONS AND SYMBOLS, REFER TO THE LEGEND DRAWINGS.

THIS DRAWING MAY HAVE BEEN MODIFIED FROM ITS ORIGINAL SIZE. ALL SCALE NOTATIONS INDICATED ARE BASED ON 11"x17" FORMAT DRAWINGS

ISSUE	YY-MM-DD	REVISION
2	21-01-15	FOR CONSTRUCTION
1	20-10-15	FOR TENDER

Association of Professional Engineers & Geoscientists of Saskatchewan
CERTIFICATE OF AUTHORIZATION
MPE Engineering Ltd.
Number C1334
Permission to Consult held by:

Discipline	Sk. Reg. No.	Signature
CIVIL	52866	

PROFESSIONAL ENGINEER
KAGORO
MEMBER 52866
2021-01-18
YR. MN. DAY
SASKATCHEWAN

MPE Engineering Ltd.

ENGLISH RIVER ENTERPRISES PROPERTY MANAGEMENT LP

WASTEWATER TREATMENT PLANT
PROCESS PIPING
PROCESS AND INSTRUMENTATION DIAGRAM
AIR SYSTEMS

DESIGN CRITERIA

BL 6301/BL 6302/BL 6303
- DUTY POINT: 112 SCFM @ 6.5 psi
- 10.0 HP @ 1800 RPM
- 600 VAC/3 PH/60 Hz
- MAX SPEED: 4800 RPM

BL 6101/BL 6102
- DUTY POINT: 200 SCFM @ 7.5 psi
- 15 HP
- 600 VAC/3 PH/60 Hz

BL 6201
- DUTY POINT: 200 SCFM @ 7.5 psi
- 15 HP
- 600 VAC/3 PH/60 Hz

F 6301/F 6302/F 6303/ F 6101/F 6102
- FILTER SILENCER
- MEDIUM FILTER EFFICIENCY: 92%
- SEPARATION: 5 um - 60-90%
  10 um - 85-98%

FSL 6301/FSL 6302/FSL 6303
- SP: 0.00 SCFM
- POWER: 24 VDC

FSL 6101/FSL 6102
- SP: 0.00SCFM
- POWER: 24 VDC

FSL 6201
- SP: --SCFM
- POWER: 24 VDC

PSV 6301/PSV 6302/PSV 6303
- SP: 1000 mbar

PSV 6101/PSV 6102
- SP: 1000 mbar

PSV 6201
- SP: 1000 mbar

TI 6301/TI 6302/TI 6303
- RANGE: 0-200°C

TI 6101/TI 6102
- RANGE: 0-200°C

TI 6201
- RANGE: 0-200°C

DESIGNED	I.K.	JOB	7603-002-00
DRAWN	L.J.S. (D.A.B.)	SCALE	NTS
DATE	NOVEMBER 2020	DRAWING	P1.9

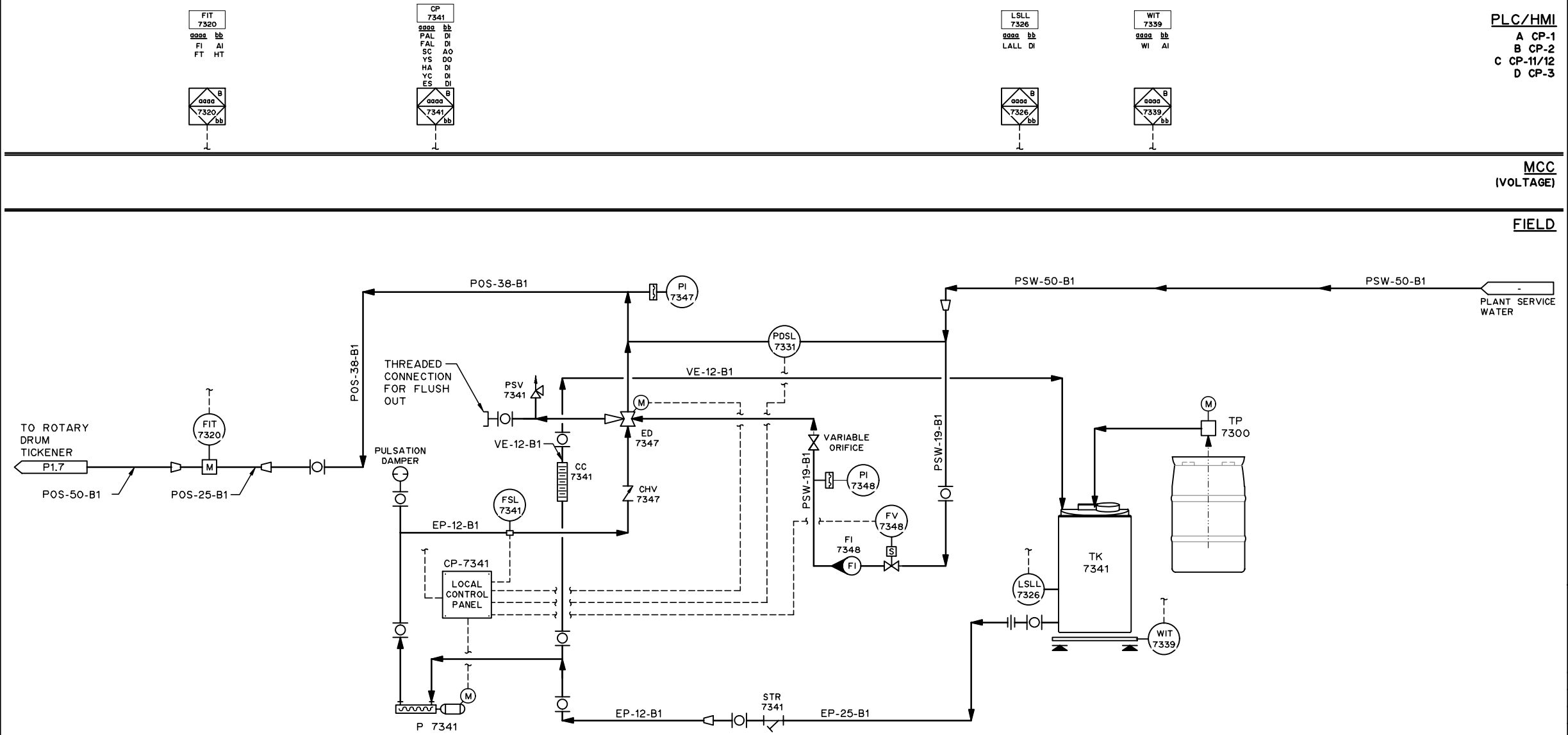

RDT POLYMER SYSTEM

NOTES:

1. FOR INFORMATION REGARDING GENERAL NOTES, UTILITIES, ABBREVIATIONS AND SYMBOLS, REFER TO THE LEGEND DRAWINGS.

THIS DRAWING MAY HAVE BEEN MODIFIED FROM ITS ORIGINAL SIZE. ALL SCALE NOTATIONS INDICATED ARE BASED ON 11"x17" FORMAT DRAWINGS

ISSUE	YY-MM-DD	REVISION
2	21-01-15	FOR CONSTRUCTION
1	20-10-15	FOR TENDER

Association of Professional Engineers & Geoscientists of Saskatchewan
CERTIFICATE OF AUTHORIZATION
MPE Engineering Ltd.
Number C1334
Permission to Consult held by:

Discipline	Sk. Reg. No.	Signature
CIVIL	52866	

PROFESSIONAL ENGINEER
KAGORO
MEMBER 52866
2021-01-18
YR. MN. DAY
SASKATCHEWAN

MPE Engineering Ltd.

ENGLISH RIVER ENTERPRISES PROPERTY MANAGEMENT LP

WASTEWATER TREATMENT PLANT
PROCESS PIPING
PROCESS AND INSTRUMENTATION DIAGRAM
POLYMER FEED SYSTEM

DESIGNED	I.K.	JOB	7603-002-00
DRAWN	L.J.S.	SCALE	NTS
DATE	NOVEMBER 2020	DRAWING	P1.10

DESIGN CRITERIA

FIT 7320
- RANGE: 0-10 L/sec
- POWER: 120 VAC

P 7341
- CAPACITY: 0.095-1.89 L/hr (0.22 kg/hr DRY POLYMER)
- 0.5 HP
- 120 VAC/3 PH/60 Hz

PSV 7341
- SP: 50 psig

FI 7348
- FLOW: 25-250 L/hr

TK 7341
- POLYMER DAY TANK
- CAPACITY: 181 L

WIT 7339
- RANGE: 0-500 kg
- POWER: 120 VAC

TP 7300
- CHEMICAL TRANSFER PUMP
- DUTY POINT: 2.8 L/s (45 gal/min)
- 120 VAC/1 PH/60 Hz

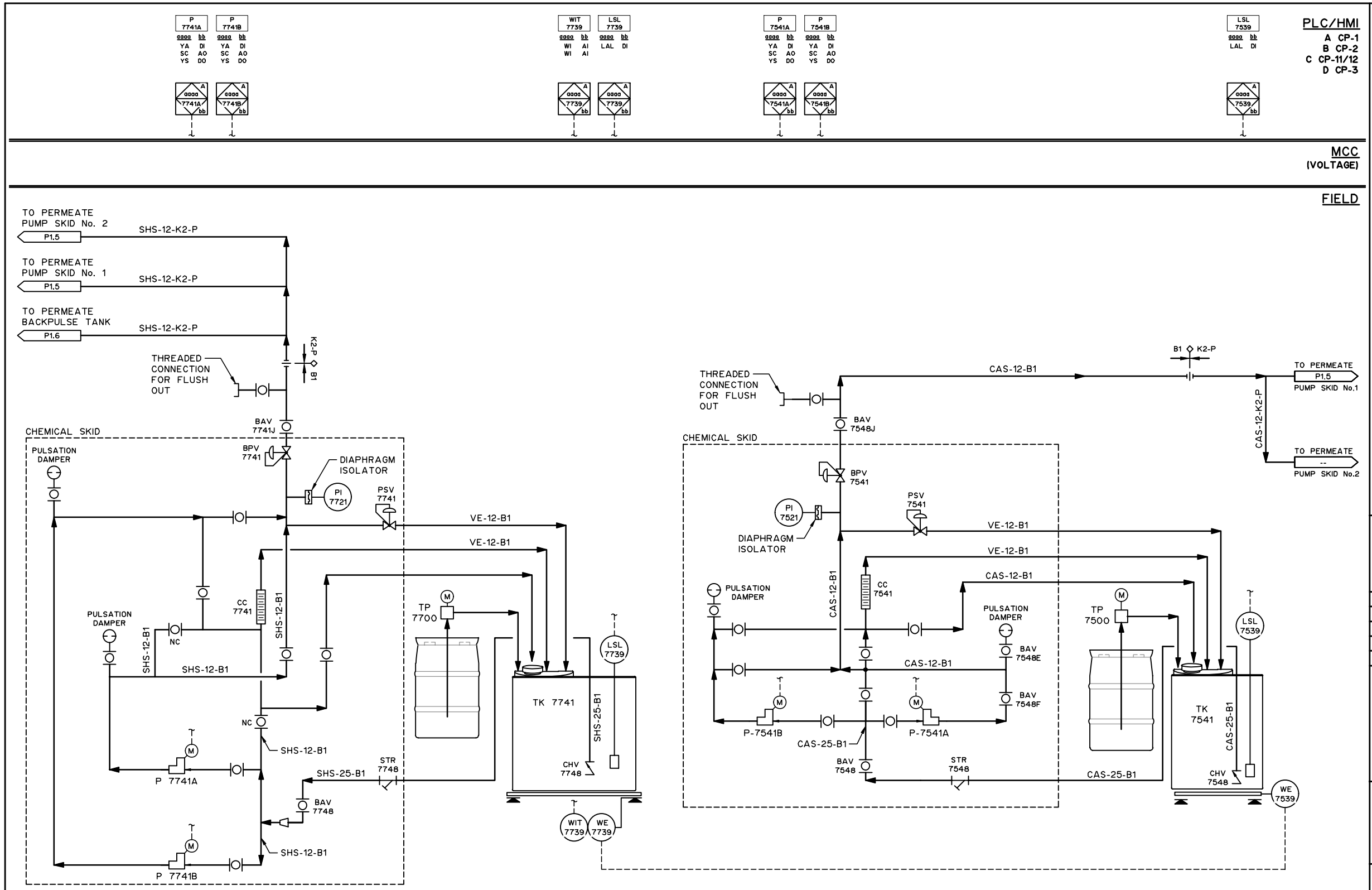

NOTES:

1. FOR INFORMATION REGARDING GENERAL NOTES, UTILITIES, ABBREVIATIONS AND SYMBOLS, REFER TO THE LEGEND DRAWINGS.

THIS DRAWING MAY HAVE BEEN MODIFIED FROM ITS ORIGINAL SIZE. ALL SCALE NOTATIONS INDICATED ARE BASED ON 11"x17" FORMAT DRAWINGS

ISSUE	YY-MM-DD	REVISION
2	21-01-15	FOR CONSTRUCTION
1	20-10-15	FOR TENDER

Association of Professional Engineers & Geoscientists of Saskatchewan
CERTIFICATE OF AUTHORIZATION
MPE Engineering Ltd.
Number C1334
Permission to Consult held by:

Discipline	Sk. Reg. No.	Signature
CIVIL	52866	

PROFESSIONAL ENGINEER
KAGORO
MEMBER 52866
2021-01-18
YR. MN. DAY
SASKATCHEWAN

MPE Engineering Ltd.

ENGLISH RIVER ENTERPRISES PROPERTY MANAGEMENT LP

WASTEWATER TREATMENT PLANT
PROCESS PIPING
PROCESS AND INSTRUMENTATION DIAGRAM
CLEAN-IN-PLACE CHEMICAL FEED SYSTEM

DESIGNED	I.K.	JOB	7603-002-00
DRAWN	L.J.S.	SCALE	NTS
DATE	NOVEMBER 2020	DRAWING	P1.11

DESIGN CRITERIA

P 7741A/B
- PERISTATIC PUMP
- DUTY POINT: 0.48-3.78 L/MIN @ 20psi
- 0.5 HP
- 120 VAC/3 PH/60 Hz

TP 7700
- CHEMICAL TRANSFER PUMP
- DUTY POINT: 2.8 L/s (45 gal/min)
- 120 VAC/1 PH/60 Hz

TK 7741
- SODIUM HYPOCHLORITE DAY TANK
- CAPACITY: 790 L

WIT 7739
- RANGE: 0-500 kg
- POWER: 120 VAC

PSV 7741
- SP: 50 psig

P 7541A/B
- MAINTENANCE: 1.13 L/min @ 30psi
- RECOVERY: 1.5 L/min @ 30psi
- 120 VAC/3 PH/60 Hz
- 0.5Hp

TP 7500
- CHEMICAL TRANSFER PUMP
- DUTY POINT: 2.8 L/s (45 gal/min)
- 120 VAC/1 PH/60 Hz

TK 7541
- CITRIC ACID DAY TANK
- CAPACITY: 790 L

PSV 7541
- SP: XX psig

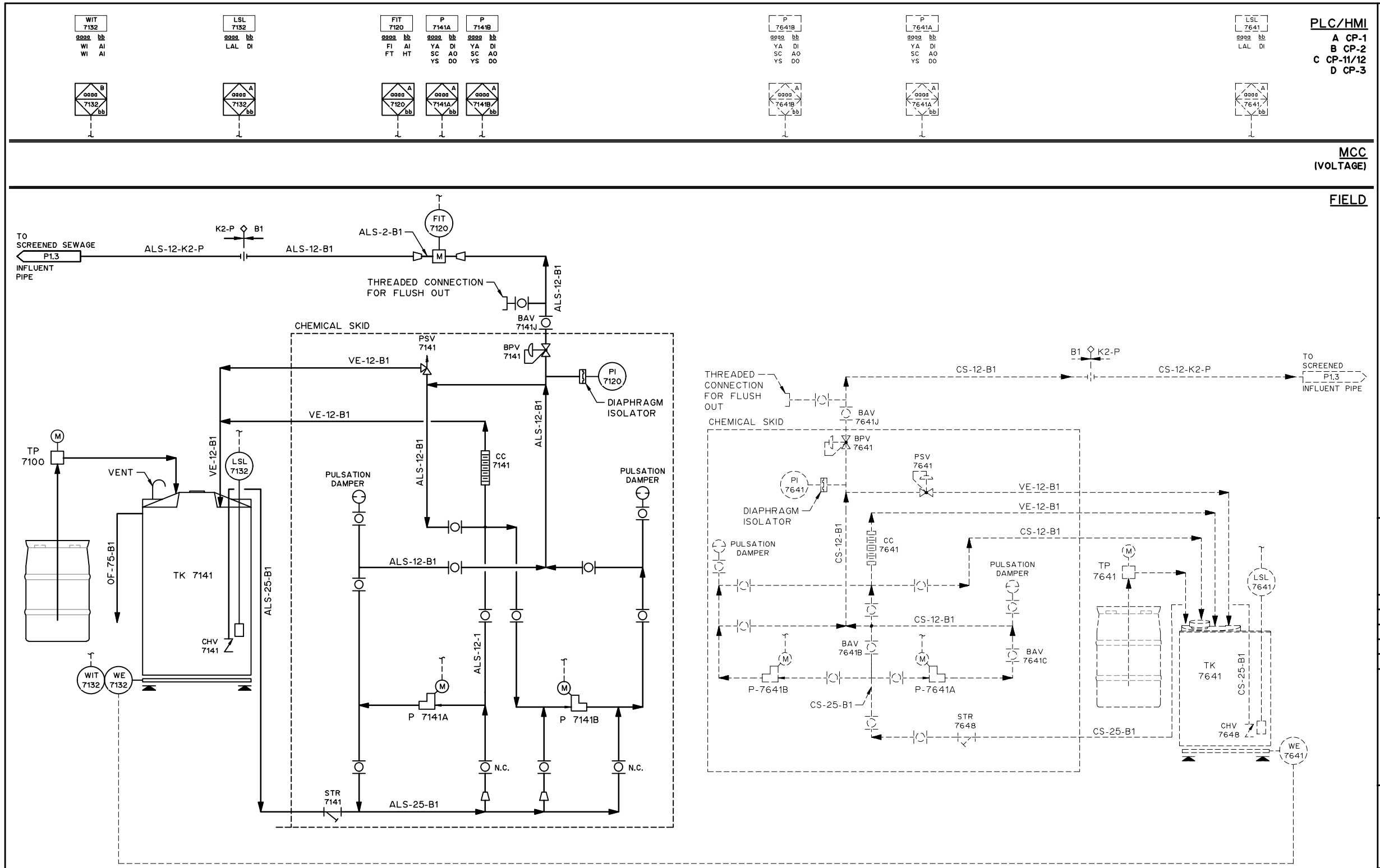

NOTES:

1. FOR INFORMATION REGARDING GENERAL NOTES, UTILITIES, ABBREVIATIONS AND SYMBOLS, REFER TO THE LEGEND DRAWINGS.

THIS DRAWING MAY HAVE BEEN MODIFIED FROM ITS ORIGINAL SIZE. ALL SCALE NOTATIONS INDICATED ARE BASED ON 11"x17" FORMAT DRAWINGS

ISSUE	YY-MM-DD	REVISION
2	21-01-15	FOR CONSTRUCTION
1	20-10-15	FOR TENDER

Association of Professional Engineers & Geoscientists of Saskatchewan
CERTIFICATE OF AUTHORIZATION
MPE Engineering Ltd.
Number C1334
Permission to Consult held by:

Discipline	Sk. Reg. No.	Signature
CIVIL	52866	

PROFESSIONAL ENGINEER — KAGORO — SASKATCHEWAN — 2021-01-18 YR. MN. DAY

MPE Engineering Ltd.

ENGLISH RIVER ENTERPRISES PROPERTY MANAGEMENT LP

WASTEWATER TREATMENT PLANT
PROCESS PIPING
PROCESS AND INSTRUMENTATION DIAGRAM
ALUM AND SODIUM HYDROXIDE FEED SYSTEMS

DESIGNED	I.K.	JOB	7603-002-00
DRAWN	L.J.S.	SCALE	NTS
DATE	NOVEMBER 2020	DRAWING	P1.12

DESIGN CRITERIA

P 7141A/B
- CAPACITY: 19 L/hr @ 145 psi
- 1/8 HP
- 115 VAC/1 PH/60 Hz

TP 7100
- CHEMICAL TRANSFER PUMP
- DUTY POINT: 2.8 L/s (45 gal/min)
- 120 VAC/1 PH/60 Hz

TK 7141
- ALUM BULK TANK
- CAPACITY: 9 000 L

WIT 7132
- RANGE: 0-500 kg
- POWER: 120 VAC

PSV 7141
- SP: 50 psig

FIT 7120
- RANGE: 0-5 L/hr
- POWER: 120 VAC

P 7641A/B
- DUTY: 18 L/min @ 30 psi
- 0.5 HP
- 120 VAC/3 PH/60 Hz

TP 7641
- CHEMICAL TRANSFER PUMP
- DUTY POINT: 2.8 L/s (45 gal/min)
- 120 VAC/1 PH/60 Hz

TK 7641
- SODIUM HYDROXIDE DAY TANK
- CAPACITY: XX L

PSV 7641
- SP: XX psig

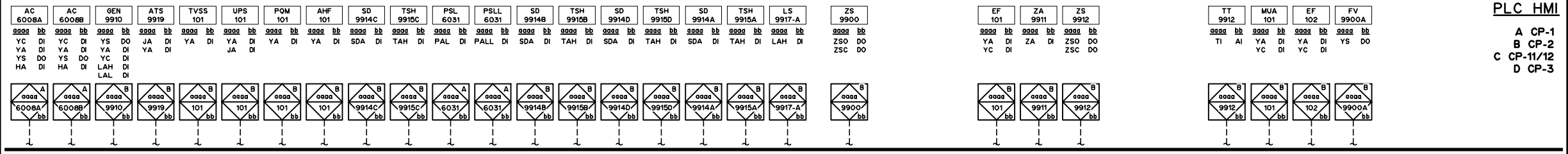

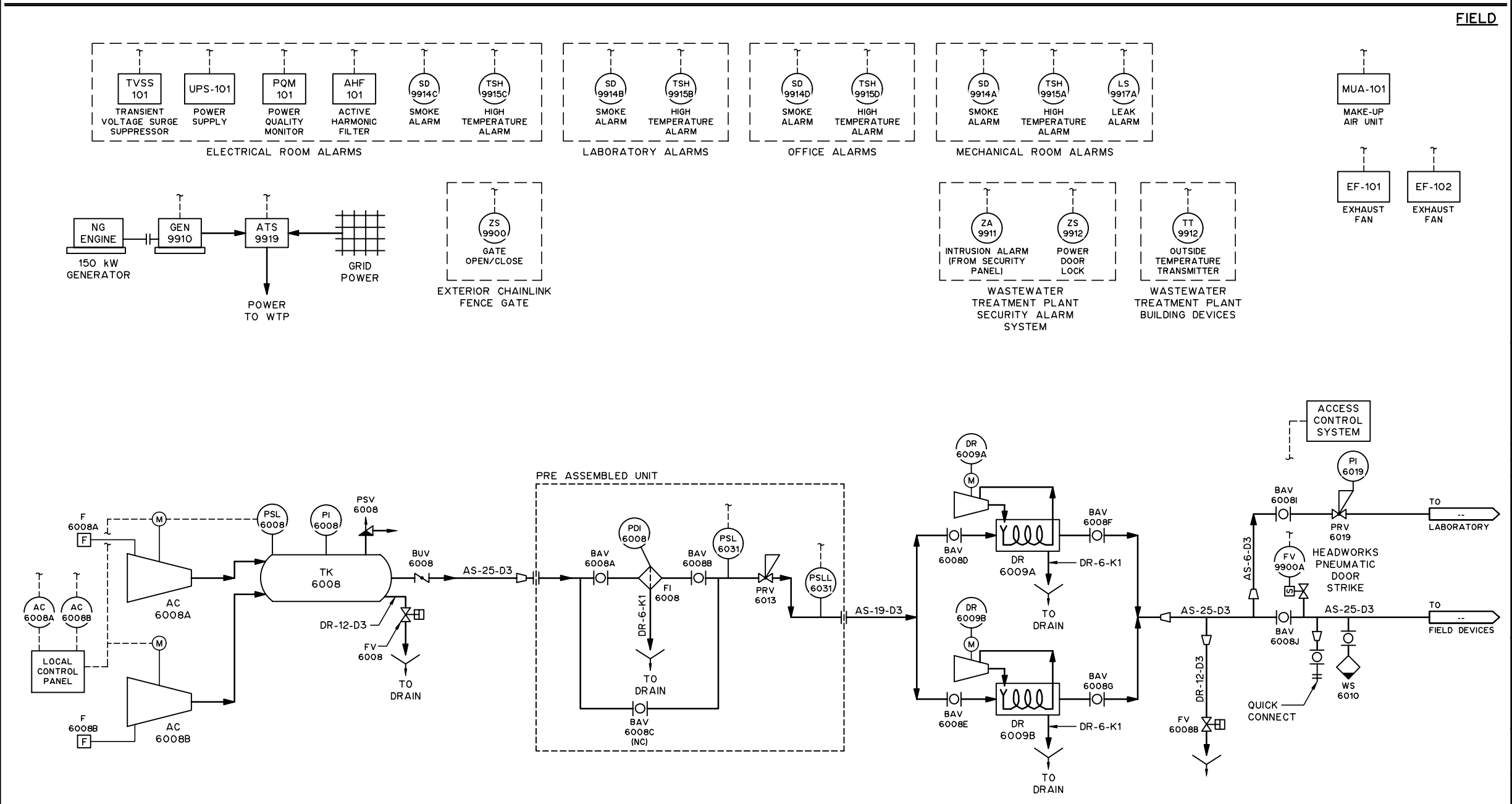

NOTES:

1. FOR INFORMATION REGARDING GENERAL NOTES, UTILITIES, ABBREVIATIONS AND SYMBOLS, REFER TO THE LEGEND DRAWINGS.

THIS DRAWING MAY HAVE BEEN MODIFIED FROM ITS ORIGINAL SIZE. ALL SCALE NOTATIONS INDICATED ARE BASED ON 11"x17" FORMAT DRAWINGS

ISSUE	YY-MM-DD	REVISION
2	21-01-15	FOR CONSTRUCTION
1	20-10-15	FOR TENDER

Association of Professional Engineers & Geoscientists of Saskatchewan
CERTIFICATE OF AUTHORIZATION
MPE Engineering Ltd.
Number C1334
Permission to Consult held by:

Discipline	Sk. Reg. No.	Signature
CIVIL	52866	

PROFESSIONAL ENGINEER — KAGORO — MEMBER 52866 — 2021-01-18 YR. MN. DAY — SASKATCHEWAN

MPE Engineering Ltd.

ENGLISH RIVER ENTERPRISES PROPERTY MANAGEMENT LP

WASTEWATER TREATMENT PLANT
PROCESS PIPING
PROCESS AND INSTRUMENTATION DIAGRAM
COMPRESSOR AND AUXILLARY SYSTEMS

DESIGNED	I.K.	JOB	7603-002-00
DRAWN	L.J.S.	SCALE	NTS
DATE	NOVEMBER 2020	DRAWING	P1.13

DESIGN CRITERIA

F 6008A/F 6008B
- POWER: 120VAC

AC 6008A/AC 6008B
- DUTY POINT: 25 CFM @ 150 psig
- 5.0 HP, 1800 RPM
- 600 VAC/3 PH/60 Hz

PSV 6008
- SP: 200 psig

TK 6008
- 454 L (120 US gpm)
- WET RECEIVER

PSL 6008
- SP HIGH: 145 psig
- SP LOW: 110 psig

WS 6008
- CAPACITY: 25 SCFM

FI 6008
- 1 MICRON FILTER
- CAPACITY: 25 SCFM

DR 6009A/DR 6009B
- CAPACITY: 0-25 CFM
- 0.25Hp, 120 VAC/1 PH/60 Hz

PSL 6031
- SP: 90 psi

PSLL 6031
- SP: 70 psi

PRV 6013
- SP: 90 psig

PRV 6019
- SP: 50 psig

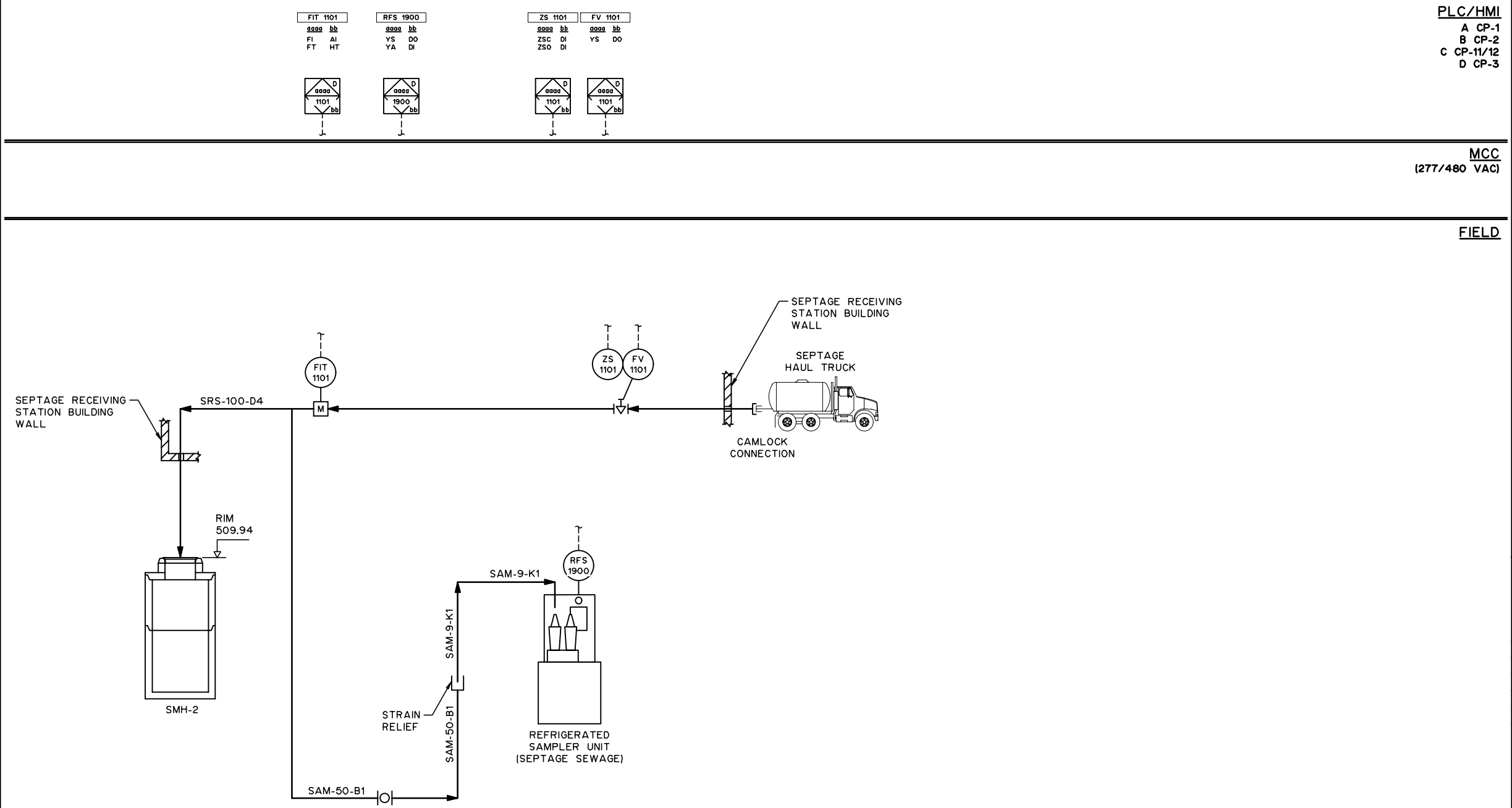

FIT 1101
- FLOW: 0-X m^3/DAY

DESIGN CRITERIA

NOTES:
1. FOR INFORMATION REGARDING GENERAL NOTES, UTILITIES, ABBREVIATIONS AND SYMBOLS, REFER TO THE LEGEND DRAWINGS.

THIS DRAWING MAY HAVE BEEN MODIFIED FROM ITS ORIGINAL SIZE. ALL SCALE NOTATIONS INDICATED ARE BASED ON 11"x17" FORMAT DRAWINGS

ISSUE	YY-MM-DD	REVISION
2	21-01-15	FOR CONSTRUCTION
1	20-10-15	FOR TENDER

Association of Professional Engineers & Geoscientists of Saskatchewan
CERTIFICATE OF AUTHORIZATION
MPE Engineering Ltd.
Number C1334
Permission to Consult held by:

Discipline	Sk. Reg. No.	Signature
CIVIL	52866	

PROFESSIONAL ENGINEER
KAGORO
MEMBER-SASKATCHEWAN
2021-01-18
YR. MN. DAY
SASKATCHEWAN

MPE Engineering Ltd.

ENGLISH RIVER ENTERPRISES PROPERTY MANAGEMENT LP

WASTEWATER TREATMENT PLANT
PROCESS PIPING
PROCESS AND INSTRUMENTATION DIAGRAM
SEPTAGE RECEIVING STATION

DESIGNED	I.K.	JOB	7603-002-00
DRAWN	L.J.S.	SCALE	NTS
DATE	NOVEMBER 2020	DRAWING	P1.14

SUEZ P&ID	SUEZ TAG	MPE P&ID	MPE TAG	EQUIPMENT DESCRIPTION
DRUM SCREENS				
DS-101	XX-FIT-XXX	P1.2	FIT 2101	FLOW METER
DS-101	XX-HV-XXX	P1.2	PLV 2501	PLUG VALVE
DS-101	XX-XXX-XXX	P1.2	CAV 2501	COMBINATION AIR VALVE
DS-101	03-HV-201-A	P1.2	PLV 2501A	PLUG VALVE
DS-101	03-HV-201-B	P1.2	PLV 2501B	PLUG VALVE
DS-101	03-HV-202-A	P1.2	BAV 2268A	BALL VALVE
DS-101	03--HV-202-B	P1.2	BAV 2268B	BALL VALVE
DS-101	03-PY-201-A	P1.2	PRV 2268A	PRESSURE REDUCING VALVE
DS-101	03-PY-201-B	P1.2	PRV 2268B	PRESSURE REDUCING VALVE
DS-101	03-PI-201-A	P1.2	PI 2268A	PRESSURE INDICATOR
DS-101	03-PI-201-B	P1.2	PI 2268B	PRESSURE INDICATOR
DS-101	03-FV-201-A	P1.2	FV 2268A	FLOW VALVE
DS-101	03-FV-201-B	P1.2	FV 2268B	FLOW VALVE
DS-101	03-SCR-201-A	P1.2	DS 2501A	DRUM SCREEN
DS-101	03-SCR-201-B	P1.2	DS 2501B	DRUM SCREEN
DS-101	03-LSH-101-1	P1.2	LSH 2201A	LEVEL SWITCH (HIGH)
DS-101	03-LSH-101-2	P1.2	LSH 2201B	LEVEL SWITCH (HIGH)
DS-101	03-HV-203-A	P1.2	BAV 2269A	BALL VALVE
DS-101	03-HV-203-B	P1.2	BAV 2269B	BALL VALVE
DS-101	03-FV-102-A	P1.2	FV 2269A	FLOW VALVE
DS-101	03-FV-102-B	P1.2	FV 2269B	FLOW VALVE
DS-101	XX-XX-XXX-A	P1.2	SC 2202A	SCREW CONVEYOR
DS-101	XX-XX-XXX-B	P1.2	SC 2202B	SCREW CONVEYOR
MEMBRANE BLOWERS				
DS-102	20-F-201-A	P1.9	F 6301	INLET FILTER AND SILENCER
DS-102	20-F-201-B	P1.9	F 6302	INLET FILTER AND SILENCER
DS-102	20-F-201-C	P1.9	F 6303	INLET FILTER AND SILENCER
DS-102	20-PDI-201-A	P1.9	PDI 6301	DIFFERENTIAL PRESS. TRANSMITTER
DS-102	20-PDI-201-B	P1.9	PDI 6302	DIFFERENTIAL PRESS. TRANSMITTER
DS-102	20-PDI-201-C	P1.9	PDI 6303	DIFFERENTIAL PRESS. TRANSMITTER
DS-102	20-B-201-A	P1.9	BL 6301	BLOWER MEMBRANE TRAIN 1
DS-102	20-B-201-B	P1.9	BL 6302	BLOWER MEMBRANE TRAIN 2
DS-102	20-B-201-C	P1.9	BL 6303	BLOWER STANDBY
DS-102	20-PSV-201-A	P1.9	PSV 6301	PRESSURE SUSTAINING VALVE
DS-102	20-PSV-201-B	P1.9	PSV 6302	PRESSURE SUSTAINING VALVE
DS-102	20-PSV-201-C	P1.9	PSV 6303	PRESSURE SUSTAINING VALVE
DS-102	20-HV-203-A	P1.9	BAV 6301B	BALL VALVE
DS-102	20-HV-203-B	P1.9	BAV 6302B	BALL VALVE
DS-102	20-HV-203-C	P1.9	BAV 6303B	BALL VALVE
DS-102	20-PI-203-A	P1.9	PI 6301B	PRESSURE INDICATOR
DS-102	20-PI-203-B	P1.9	PI 6302B	PRESSURE INDICATOR
DS-102	20-PI-203-C	P1.9	PI 6303B	PRESSURE INDICATOR
DS-102	XX-XX-XXX-A	P1.9	DS 6301B	DISCHARGE SILENCER
DS-102	XX-XX-XXX-B	P1.9	DS 6302B	DISCHARGE SILENCER
DS-102	XX-XX-XXX-C	P1.9	DS 6303B	DISCHARGE SILENCER
DS-102	20-CV-201-A	P1.9	CHV 6301	CHECK VALVE
DS-102	20-CV-201-B	P1.9	CHV 6302	CHECK VALVE
DS-102	20-CV-201-C	P1.9	CHV 6303	CHECK VALVE
DS-102	20-XX-XXX-A	P1.9	EXJ 6301	DISCHARGE FLEXIBLE SLEEVE
DS-102	20-XX-XXX-B	P1.9	EXJ 6302	DISCHARGE FLEXIBLE SLEEVE
DS-102	20-XX-XXX-C	P1.9	EXJ 6303	DISCHARGE FLEXIBLE SLEEVE
DS-102	20-FSL-201-A	P1.9	FSL 6301	FLOW SWITCH (LOW)
DS-102	20-FSL-201-B	P1.9	FSL 6302	FLOW SWITCH (LOW)
DS-102	20-FSL-201-C	P1.9	FSL 6303	FLOW SWITCH (LOW)
DS-102	20-HV-201-A	P1.9	BUV 6301	BUTTERFLY VALVE
DS-102	20-HV-201-B	P1.9	BUV 6302	BUTTERFLY VALVE
DS-102	20-HV-201-C	P1.9	BUV 6303	BUTTERFLY VALVE
PROCESS BLOWERS				
DS-103	16-F-801	P1.9	F 6201	INLET FILTER AND SILENCER
DS-103	16-PDI-801	P1.9	PDI 6201	DIFFERENTIAL PRESS. TRANSMITTER
DS-103	16-B-801	P1.9	BL 6201	BLOWER TWAS
DS-103	16-PSV-801	P1.9	PSV 6201	PRESSURE SUSTAINING VALVE
DS-103	16-HV-803	P1.9	BAV 6201B	BALL VALVE
DS-103	16-PI-803	P1.9	PI 6201B	PRESSURE INDICATOR
DS-103	XX-XX-XXX	P1.9	DS 6201B	DISCHARGE SILENCER
DS-103	16-CV-801	P1.9	CHV 6201	CHECK VALVE
DS-103	16-XX-XXX	P1.9	EXJ 6201	DISCHARGE FLEXIBLE SLEEVE
DS-103	16-FSL-801	P1.9	FSL 6201	FLOW SWITCH (LOW)
DS-103	16-HV-801	P1.9	BUV 6201	BUTTERFLY VALVE
DS-103	16-F-501-A	P1.9	F 6101	INLET FILTER AND SILENCER
DS-103	16-F-501-B	P1.9	F 6102	INLET FILTER AND SILENCER
DS-103	16-PDI-501-A	P1.9	PDI 6101	DIFFERENTIAL PRESS. TRANSMITTER
DS-103	16-PDI-501-B	P1.9	PDI 6102	DIFFERENTIAL PRESS. TRANSMITTER
DS-103	16-B-501-A	P1.9	BL 6101	BLOWER BIOREACTOR TANK 1
DS-103	16-B-501-B	P1.9	BL 6102	BLOWER BIOREACTOR TANK 2
DS-103	16-PSV-501-A	P1.9	PSV 6101	PRESSURE SUSTAINING VALVE
DS-103	16-PSV-501-B	P1.9	PSV 6102	PRESSURE SUSTAINING VALVE
DS-103	16-HV-503-A	P1.9	BAV 6101B	BALL VALVE
DS-103	16-HV-503-B	P1.9	BAV 6102B	BALL VALVE
DS-103	16-PI-503-A	P1.9	PI 6101B	PRESSURE INDICATOR
DS-103	16-PI-503-B	P1.9	PI 6102B	PRESSURE INDICATOR
DS-103	XX-XX-XXX-X	P1.9	DS 6101B	DISCHARGE SILENCER
DS-103	XX-ML-XXX-X	P1.9	DS 6102B	DISCHARGE SILENCER
DS-103	16-CV-501-A	P1.9	CHV 6101	CHECK VALVE
DS-103	16-CV-501-B	P1.9	CHV 6102	CHECK VALVE
DS-103	16-XX-XXX-A	P1.9	EXJ 6101	DISCHARGE FLEXIBLE SLEEVE
DS-103	16-XX-XXX-B	P1.9	EXJ 6102	DISCHARGE FLEXIBLE SLEEVE
DS-103	16-FSL-501-A	P1.9	FSL 6101	FLOW SWITCH (LOW)
DS-103	16-FSL-501-B	P1.9	FSL 6102	FLOW SWITCH (LOW)
DS-103	16-HV-501-A	P1.9	BUV 6101	BUTTERFLY VALVE
DS-103	16-HV-501-B	P1.9	BUV 6102	BUTTERFLY VALVE
BIOREACTOR				
DS-104	20-FV-807	P1.3	FCV 4912	FLOW CONTROL VALVE
DS-104	16-HV-409-1	P1.3	WG 3001-1	UPWARD CLOSING WEIR GATE
DS-104	16-HV-409-2	P1.3	WG 3001-2	UPWARD CLOSING WEIR GATE
DS-104	16-MX-211	P1.3	MX 3011-1	MIXER - ANOXIC TANK
DS-104	16-LIT-403-1	P1.3	LT 3026-1	HYDROSTATIC LEVEL TRANSDUCER
DS-104	16-LIT-403-2	P1.3	LT 3026-2	HYDROSTATIC LEVEL TRANSDUCER
DS-104	16-AIT-405-1	P1.3	AIT 3041-1	DISSOLVED OXYGEN WATER
DS-104	16-AIT-405-2	P1.3	AIT 3041-2	DISSOLVED OXYGEN WATER
DS-104	16-AIT-402-1	P1.3	AIT 3042-1	PH SENSOR
DS-104	16-AIT-402-2	P1.3	AIT 3042-2	PH SENSOR
DS-104	16-LSHH-401-1	P1.3	LSHH 3026-1	LEVEL SWITCH (HIGH HIGH)
DS-104	16-LSHH-401-2	P1.3	LSHH 3026-2	LEVEL SWITCH (HIGH HIGH)
DS-104	16-HV-510-1	P1.3	WG 3002-1	WEIR GATE
DS-104	16-HV-510-2	P1.3	WG 3002-2	WEIR GATE
DS-104	16-HV-505-1	P1.3	BUV 6310-1	BUTTERFLY VALVE
DS-104	16-HV-505-2	P1.3	BUV 6310-2	BUTTERFLY VALVE
MEMBRANE TANKS				
DS-105	20-FV-209-1	P1.4	FCV 4601-1	FLOW CONTROL VALVE
DS-105	20-FV-209-2	P1.4	FCV 4601-2	FLOW CONTROL VALVE
DS-105	20-FV-205-1	P1.4	FV 6101-1	FLOW VALVE
DS-105	20-FV-205-2	P1.4	FV 6101-2	FLOW VALVE
DS-105	20-HV-204A-1	P1.4	BUV 6101-1	BUTTERFLY VALVE
DS-105	20-HV-204A-2	P1.4	BUV 6101-2	BUTTERFLY VALVE
DS-105	20-HV-204B-1	P1.4	BUV 6102-1	BUTTERFLY VALVE
DS-105	20-HV-204B-2	P1.4	BUV 6102-2	BUTTERFLY VALVE
DS-105	20-HV-310A-1	P1.4	BUV 4601-1	BUTTERFLY VALVE
DS-105	20-HV-310A-2	P1.4	BUV 4601-2	BUTTERFLY VALVE
DS-105	20-HV-310B-1	P1.4	BUV 4602-1	BUTTERFLY VALVE
DS-105	20-HV-310B-2	P1.4	BUV 4602-2	BUTTERFLY VALVE
DS-105	20-HV-307-1	P1.4	BAV 4632-1	BALL VALVE
DS-105	20-HV-307-2	P1.4	BAV 4632-2	BALL VALVE
DS-105	20-PIT-301-1	P1.4	PIT-4632-1	PRESSURE TRANSMITTER
DS-105	20-PIT-301-2	P1.4	PIT-4632-2	PRESSURE TRANSMITTER
DS-105	20-LSHH-201-1	P1.4	LSHH 4626-1	LEVEL SWITCH (HIGH HIGH)
DS-105	20-LSHH-201-2	P1.4	LSHH 4626-2	LEVEL SWITCH (HIGH HIGH)
DS-105	20-LSLL-201-1	P1.4	LSLL 4626-1	LEVEL SWITCH (LOW LOW)
DS-105	20-LSLL-201-2	P1.4	LSLL 4626-2	LEVEL SWITCH (LOW LOW)
DS-105	20-LIT-203-1	P1.4	LIT 4626-1	LEVEL TRANSMITTER
DS-105	20-LIT-203-2	P1.4	LIT 4626-2	LEVEL TRANSMITTER
DS-105	23-HV-803-1	P1.4	BAV 6003-1	BALL VALVE, AIR SPLY
DS-105	23-HV-803-2	P1.4	BAV 6003-2	BALL VALVE, AIR SPLY
DS-105	20-HV-802-1	P1.4	BAV 6001-1	BALL VALVE, AIR SPLY
DS-105	20-HV-802-2	P1.4	BAV 6001-2	BALL VALVE, AIR SPLY
DS-105	20-F-801-1	P1.4	F 6001-1	FILTER, AIR SPLY
DS-105	20-F-801-2	P1.4	F 6001-2	FILTER, AIR SPLY
DS-105	20-FV-802-1	P1.4	FV 6001-1	FLOW VALVE, AIR SPLY
DS-105	20-FV-802-2	P1.4	FV 6001-2	FLOW VALVE, AIR SPLY
DS-105	20-FV-801-1	P1.4	FCV 6001-1	FLOW CONTROL VALVE, AIR SPLY
DS-105	20-FV-801-2	P1.4	FCV 6001-2	FLOW CONTROL VAVLE, AIR SPLY
DS-105	20-E-801-1	P1.4	ED 6001-1	EDUCTOR, AIR SPLY
DS-105	20-E-801-2	P1.4	ED 6001-2	EDUCTOR, AIR SPLY
DS-105	20-HV-801-1	P1.4	BAV 6002-1	BALL VALVE, AIR SPLY
DS-105	20-HV-801-2	P1.4	BAV 6002-2	BALL VALVE, AIR SPLY
PROCESS PUMP (PERMEATE)				
DS-106	23-FV-102-1	P1.5	FV 4613-1	FLOW VALVE, SODIUM HYPO.
DS-106	23-FV-102-1	P1.5	FV 4613-2	FLOW VALVE, SODIUM HYPO.
DS-106	23-CV-101-1	P1.5	CHV 4613-1	CHECK VALVE, SODIUM HYPO.
DS-106	23-CV-101-2	P1.5	CHV 4613-2	CHECK VALVE, SODIUM HYPO.
DS-106	23-FY-302-1	P1.5	FV 4612-1	FLOW VALVE, CITRIC ACID
DS-106	23-FY-302-2	P1.5	FV 4612-2	FLOW VALVE, CITRIC ACID
DS-106	23-CV-301-1	P1.5	CHV 4612-1	CHECK VALVE, CITRIC ACID
DS-106	23-CV-301-2	P1.5	CHV 4612-2	CHECK VALVE, CITRIC ACID
DS-106	20-HV-306-1	P1.5	BAV 4631-1	BALL VALVE
DS-106	20-HV-306-2	P1.5	BAV 4631-2	BALL VALVE
DS-106	20-FV-302-1	P1.5	FV 4611-1	FLOW VALVE
DS-106	20-FV-302-2	P1.5	FV 4611-2	FLOW VALVE
DS-106	20-HV-304-1	P1.5	BAV 4631A-1	BALL VALVE
DS-106	20-HV-304-2	P1.5	BAV 4631A-2	BALL VALVE
DS-106	20-PI-304-1	P1.5	PI 4631A-1	PRESSURE INDICATOR

THIS DRAWING MAY HAVE BEEN MODIFIED FROM ITS ORIGINAL SIZE. ALL SCALE NOTATIONS INDICATED ARE BASED ON 11"x17" FORMAT DRAWINGS

ISSUE	YY-MM-DD	REVISION
2	21-01-15	FOR CONSTRUCTION
1	20-10-15	FOR TENDER

Association of Professional Engineers & Geoscientists of Saskatchewan
CERTIFICATE OF AUTHORIZATION
MPE Engineering Ltd.
Number C1334
Permission to Consult held by:

Discipline	Sk. Reg. No.	Signature
CIVIL	52866	

PROFESSIONAL ENGINEER
KAGORO
MEMBER 52866
2021-01-18
YR. MN. DAY
SASKATCHEWAN

MPE Engineering Ltd.

ENGLISH RIVER ENTERPRISES PROPERTY MANAGEMENT LP

WASTEWATER TREATMENT PLANT
PROCESS PIPING
SUEZ EQUIPMENT TAG LIST
SHEET 1

DESIGNED	I.K.	JOB	7603-002-00
DRAWN	C.A.Z.	SCALE	NTS
DATE	NOVEMBER 2020	DRAWING	P1.15

SUEZ P&ID	SUEZ TAG	MPE P&ID	MPE TAG	EQUIPMENT DESCRIPTION
DS-106	20-PI-304-2	P1.5	PI 4631A-2	PRESSURE INDICATOR
DS-106	20-PSH-302-1	P1.5	PSH 4631A-1	PRESSURE SWITCH (HIGH)
DS-106	20-PSH-302-2	P1.5	PSH 4631A-2	PRESSURE SWITCH (HIGH)
DS-106	20-P-301-1	P1.5	P 4611-1	PUMP
DS-106	20-P-301-2	P1.5	P 4611-2	PUMP
DS-106	20-HV-303-1	P1.5	BAV 4631B-1	BALL VALVE
DS-106	20-HV-303-2	P1.5	BAV 4631B-2	BALL VALVE
DS-106	20-PI-303-1	P1.5	PI 4631B-1	PRESSURE INDICATOR
DS-106	20-PI-303-2	P1.5	PI 4631B-2	PRESSURE IDICATOR
DS-106	20-PSH-304-1	P1.5	PSH 4631B-1	PRESSURE SWITCH (HIGH)
DS-106	20-PSH-304-2	P1.5	PSH 4631B-2	PRESSURE SWITCH (HIGH)
DS-106	20-HV-305-1	P1.5	BAV 4632-1	BALL VALVE
DS-106	20-HV-305-2	P1.5	BAV 4632-2	BALL VALVE
DS-106	20-HV-320-1	P1.5	BAV 4637-1	BALL VALVE
DS-106	20-HV-320-2	P1.5	BAV 4637-2	BALL VALVE
DS-106	20-AIT-320-1	P1.5	AIT 4637-1	TURBIDITY
DS-106	20-AIT-320-2	P1.5	AIT 4637-2	TURBIDITY
DS-106	20-FV-320-1	P1.5	FV 4637-1	FLOW VALVE
DS-106	20-FV-320-2	P1.5	FV 4637-2	FLOW VALVE
DS-106	20-HCV-320-1	P1.5	NEV 4637-1	NEEDLE VALVE
DS-106	20-HCV-320-2	P1.5	NEV 4637-2	NEEDLE VALVE
DS-106	20-FIT-307-1	P1.5	FIT 4620-1	FLOW METER
DS-106	20-FIT-307-2	P1.5	FIT 4620-2	FLOW METER
DS-106	20-HV-301-1	P1.5	BUV 4611-1	BUTTERFLY VALVE
DS-106	20-HV-301-2	P1.5	BUV 4611-2	BUTTERFLY VALVE
DS-106	20-CV-301-1	P1.5	CHV 4701-1	CHECK VALVE
DS-106	20-CV-301-2	P1.5	CHV 4701-2	CHECK VALVE
DS-106	20-FV-609-1	P1.5	FV 4701-1	FLOW VALVE
DS-106	20-FV-609-2	P1.5	FV 4701-2	FLOW VALVE
DS-106	90-HV-010-1	P1.5	BAV 6001-1	BALL VALVE, AIR SPLY
DS-106	90-HV-010-2	P1.5	BAV 6001-2	BALL VALVE, AIR SPLY
BACKPULSE TANK				
DS-107	23-FV-161	P1.6	FV 7960	FLOW VALVE, SODIUM HYPO.
DS-107	23-CV-110	P1.6	CHV 7960	CHECK VALVE
DS-107	20-HV-611	P1.6	BAV 7932	BALL VALVE
DS-107	20-LIT-603	P1.6	LIT 7932	LIT TRANSMITTER
DS-107	XX-HV-XXX	P1.6	BUV 5104	BALL VALVE
DS-107	20-FV-641	P1.6	FV 5102	FLOW VALVE
DS-107	20-HV-609	P1.6	BUV 5101	BUTTERFLY VALVE
DS-107	20-HV-608	P1.6	BAV 2702	BALL VALVE
DS-107	20-TT-001	P1.6	TT 5108	TEMPERATURE TRANSMITTER
DS-107	XX-HV-XXX	P1.6	BAV 5101	BALL VALVE
RAS/WAS/DRAIN PUMPS				
DS-108(1 OF 2)	20-FV-501-1	P1.4	FV 4901-1	FLOW VALVE
DS-108(1 OF 2)	20-FV-501-2	P1.4	FV 4901-2	FLOW VALVE
DS-108(1 OF 2)	20-HV-504-1	P1.4	BAV 4904-1	BALL VALVE
DS-108(1 OF 2)	20-HV-504-2	P1.4	BAV 4904-2	BALL VALVE
DS-108(1 OF 2)	20-PI-504-1	P1.4	PI 4901-1	PRESSURE INDICATOR
DS-108(1 OF 2)	20-PI-504-2	P1.4	PI 4901-2	PRESSURE INDICATOR
DS-108(1 OF 2)	20-HV-506-1	P1.4	BAV 4601-1	BALL VALVE
DS-108(1 OF 2)	20-HV-506-2	P1.4	BAV 4601-2	BALL VALVE
DS-108(1 OF 2)	20-P-501-1	P1.4	P 4901-1	PUMP
DS-108(1 OF 2)	20-P-501-2	P1.4	P 4901-2	PUMP
DS-108(1 OF 2)	20-HV-503-1	P1.4	BAV 4903-1	BALL VALVE

SUEZ P&ID	SUEZ TAG	MPE P&ID	MPE TAG	EQUIPMENT DESCRIPTION
DS-108(1 OF 2)	20-HV-503-2	P1.4	BAV 4903-2	BALL VALVE
DS-108(1 OF 2)	20-PI-503-1	P1.4	PI 4902-1	PRESSURE INDICATOR
DS-108(1 OF 2)	20-PI-503-2	P1.4	PI 4902-2	PRESSURE INDICATOR
DS-108(1 OF 2)	20-CV-501-1	P1.4	CHV 4901-1	CHECK VALVE
DS-108(1 OF 2)	20-CV-501-2	P1.4	CHV 4901-2	CHECK VALVE
DS-108(1 OF 2)	20-HV-501-1	P1.4	BUV 4902-1	BUTTERFLY VALVE
DS-108(1 OF 2)	20-HV-501-2	P1.4	BUV 4902-2	BUTTERFLY VALVE
DS-108(1 OF 2)	20-FIT-507-1	P1.4	FIT 4901-1	FLOW METER
DS-108(1 OF 2)	20-FIT-507-2	P1.4	FIT 4901-2	FLOW METER
DS-108(1 OF 2)	20-FIT-401	P1.8	FIT 3120	FLOW METER
DS-108(1 OF 2)	20-FV-701	P1.8	FV 3112	FLOW VALVE
TWAS HOLDING TANK				
DS-108(2 OF 2)	16-LIT-701	P1.8	LIT 3226	HYDROSTATIC LEVEL TRANSDUCER
DS-108(2 OF 2)	16-LSH-703	P1.8	LSH 3226	LEVEL SWITCH (HIGH)
DS-108(2 OF 2)	16-LSHH-XXX	P1.8	LSHH 3226B	LEVEL SWITCH (HIGH HIGH)
UV SYSTEM				
DS-109	38-FIT-101	P1.6	FIT 5155	FLOW METER
DS-109	XX-HV-XXX	P1.6	BUV 5103	BUTTERFLY VALVE
DS-109	38-HV-101	P1.6	BUV 5101A	BUTTERFLY VALVE
DS-109	--	P1.6	BUV 5102A	BUTTERFLY VALVE, FUTURE
DS-109	38-SV-101	P1.6	BAV 5155-1A	BALL VALVE
DS-109	--	P1.6	BAV 5155-2A	BALL VALVE, FUTURE
DS-109	38-UV-101-1	P1.6	UVR 5155-1	UV REACTOR
DS-109	--	P1.6	UVR 5155-2	UV REACTOR, FUTURE
DS-109	38-SV-102	P1.6	BAV 5155-1B	BALL VALVE
DS-109	--	P1.6	BAV 5155-2B	BALL VALVE, FUTURE
DS-109	38-HV-102	P1.6	BUV 5101B	BUTTERFLY VALVE
DS-109	--	P1.6	BUV 5102B	BUTTERFLY VALVE, FUTURE
SODIUM HYPOCHLORITE SYSTEM				
DS 110(1 OF 2)	23-TK-101	P1.11	TK 7741	SODIUM HYPOCHLORITE TANK
DS 110(1 OF 2)	23-CV-101	P1.11	--	CHECK VALVE
DS 110(1 OF 2)	23-LSL-101	P1.11	LSL 7739	LEVEL SWITCH (LOW)
DS 110(1 OF 2)	23-P-101-A	P1.11	P 7741A	CHEMICAL PUMP
DS 110(1 OF 2)	23-P-101-B	P1.11	P 7741B	CHEMICAL PUMP, STANDBY
DS 110(1 OF 2)	23-FQI-101	P1.11	CC 7741	CALIBRATION COLUMN
DS 110(1 OF 2)	23-PI-103	P1.11	PI 7721	PRESSURE INDICATOR
DS 110(1 OF 2)	23-PSV-109	P1.11	PSV 7741	PRESSURE SUSTAINING VALVE
DS 110(1 OF 2)	23-PCV-101	P1.11	BPV 7741	BACKFLOW PRESSURE VALVE
DS 110(1 OF 2)	23-HV-XXX	P1.11	BAV 7748	BALL VALVE
DS 110(1 OF 2)	23-CV-XXX	P1.11	CHV 7748	CHECK VALVE
DS 110(1 OF 2)	23-XXX-XXX	P1.11	STR 7748	STRAINER
DS 110(1 OF 2)	23-PSV-101-A	P1.11	--	PRESSURE SUSTAINING VALVE
DS 110(1 OF 2)	23-PSV-101-B	P1.11	--	PRESSURE SUSTAINING VALVE
DS 110(1 OF 2)	23-HV-101-A	P1.11	BAV 7741J	BALL VALVE
DS 110(1 OF 2)	23-HV-102-A	P1.11	BAV 7741X	BALL VALVE
DS 110(1 OF 2)	23-HV-102-B	P1.11	BAV 7741X	BALL VALVE
DS 110(1 OF 2)	23-HV-105	P1.11	BAV 7741X	BALL VALVE
DS 110(1 OF 2)	23-HV-104-A	P1.11	BAV 7741X	BALL VALVE
DS 110(1 OF 2)	23-HV-104-B	P1.11	BAV 7741X	BALL VALVE
DS 110(1 OF 2)	23-HV-103-A	P1.11	BAV 7741X	BALL VALVE
DS 110(1 OF 2)	23-HV-103-B	P1.11	BAV 7741X	BALL VALVE
DS 110(1 OF 2)	23-HV-106-A	P1.11	BAV 7741X	BALL VALVE
DS 110(1 OF 2)	23-HV-106-B	P1.11	BAV 7741X	BALL VALVE

SUEZ P&ID	SUEZ TAG	MPE P&ID	MPE TAG	EQUIPMENT DESCRIPTION
CITRIC ACID SYSTEM				
DS 110(1 OF 2)	23-TK-301	P1.11	TK 7541	CITRIC ACID TANK
DS 110(1 OF 2)	23-CV-301	P1.11	--	CHECK VALVE
DS 110(1 OF 2)	23-LSL-301	P1.11	LSL 7539	LEVEL SWITCH (LOW)
DS 110(1 OF 2)	23-P-301-A	P1.11	P 7541A	CHEMICAL PUMP
DS 110(1 OF 2)	23-P-301-B	P1.11	P 7541B	CHEMICAL PUMP, STANDBY
DS 110(1 OF 2)	23-FQI-301	P1.11	CC 7541	CALIBRATION COLUMN
DS 110(1 OF 2)	23-PI-303	P1.11	PI 7521	PRESSURE INDICATOR
DS 110(1 OF 2)	23-PSV-XXX	P1.11	PSV 7541	PRESSURE SUSTAINING VALVE
DS 110(1 OF 2)	23-PCV-301	P1.11	BPV 7541	BACKFLOW PRESSURE VALVE
DS 110(1 OF 2)	23-HV-XXX	P1.11	BAV 7548	BALL VALVE
DS 110(1 OF 2)	23-CV-XXX	P1.11	CHV 7548	CHECK VALVE
DS 110(1 OF 2)	23-XXX-XXX	P1.11	STR 7548	STRAINER
DS 110(1 OF 2)	23-PSV-301-A	P1.11	--	PRESSURE SUSTAINING VALVE
DS 110(1 OF 2)	23-PSV-301-B	P1.11	--	PRESSURE SUSTAINING VALVE
DS 110(1 OF 2)	23-HV-301-A	P1.11	BAV 7541J	BALL VALVE
DS 110(1 OF 2)	23-HV-302-A	P1.11	BAV 7541X	BALL VALVE
DS 110(1 OF 2)	23-HV-302-B	P1.11	BAV 7541X	BALL VALVE
DS 110(1 OF 2)	23-HV-305	P1.11	BAV 7541X	BALL VALVE
DS 110(1 OF 2)	23-HV-304-A	P1.11	BAV 7541X	BALL VALVE
DS 110(1 OF 2)	23-HV-304-B	P1.11	BAV 7541X	BALL VALVE
DS 110(1 OF 2)	23-HV-303-A	P1.11	BAV 7541X	BALL VALVE
DS 110(1 OF 2)	23-HV-303-B	P1.11	BAV 7541X	BALL VALVE
DS 110(1 OF 2)	23-HV-306-A	P1.11	BAV 7541X	BALL VALVE
DS 110(1 OF 2)	23-HV-306-B	P1.11	BAV 7541X	BALL VALVE
ALUM SYSTEM				
DS 110(2 OF 2)	10-TK-601	P1.12	TK 7141	ALUM TANK
DS 110(2 OF 2)	10-CV-601	P1.12	--	CHECK VALVE
DS 110(2 OF 2)	10-LSL-601	P1.12	LSL 7132	LEVEL SWITCH (LOW)
DS 110(2 OF 2)	10-P-601-A	P1.12	P 7141A	CHEMICAL PUMP
DS 110(2 OF 2)	10-P-601-B	P1.12	P 7141B	CHEMICAL PUMP, STANDBY
DS 110(2 OF 2)	10-FQI-601	P1.12	CC 7141	CALIBRATION COLUMN
DS 110(2 OF 2)	10-PI-603	P1.12	PI 7120	PRESSURE INDICATOR
DS 110(2 OF 2)	10-PSV-XXX	P1.12	PSV 7141	PRESSURE SUSTAINING VALVE
DS 110(2 OF 2)	10-PCV-601	P1.12	BPV 7141	BACKFLOW PRESSURE VALVE
DS 110(2 OF 2)	23-HV-XXX	P1.12	BAV 7141	BALL VALVE
DS 110(2 OF 2)	23-CV-XXX	P1.12	CHV 7141	CHECK VALVE
DS 110(2 OF 2)	23-XXX-XXX	P1.12	STR 7141	STRAINER
DS 110(2 OF 2)	10-PSV-601-A	P1.12	--	PRESSURE SUSTAINING VALVE
DS 110(2 OF 2)	10-PSV-601-B	P1.12	--	PRESSURE SUSTAINING VALVE
DS 110(2 OF 2)	10-HV-601-A	P1.12	BAV 7141J	BALL VALVE
DS 110(2 OF 2)	10-HV-602-A	P1.12	BAV 7141X	BALL VALVE
DS 110(2 OF 2)	10-HV-602-B	P1.12	BAV 7141X	BALL VALVE
DS 110(2 OF 2)	10-HV-605	P1.12	BAV 7141X	BALL VALVE
DS 110(2 OF 2)	10-HV-604-A	P1.12	BAV 7141X	BALL VALVE
DS 110(2 OF 2)	10-HV-604-B	P1.12	BAV 7141X	BALL VALVE
DS 110(2 OF 2)	10-HV-603-A	P1.12	BAV 7141X	BALL VALVE
DS 110(2 OF 2)	10-HV-603-B	P1.12	BAV 7141X	BALL VALVE
DS 110(2 OF 2)	10-HV-606-A	P1.12	BAV 7141X	BALL VALVE
DS 110(2 OF 2)	10-HV-606-B	P1.12	BAV 7141X	BALL VALVE
DS 110(2 OF 2)	10-FIT-XXX	P1.12	FIT 7120	FLOW METER
SODIUM HYDROXIDE SYSTEM (FUTURE)				
DS 110(2 OF 2)	15-TK-601	P1.12	TK 7641	ALUM TANK
DS 110(2 OF 2)	15-CV-601	P1.12	--	CHECK VALVE

THIS DRAWING MAY HAVE BEEN MODIFIED FROM ITS ORIGINAL SIZE. ALL SCALE NOTATIONS INDICATED ARE BASED ON 11"x17" FORMAT DRAWINGS

ISSUE	YY-MM-DD	REVISION
2	21-01-15	FOR CONSTRUCTION
1	20-10-15	FOR TENDER

Association of Professional Engineers & Geoscientists of Saskatchewan
CERTIFICATE OF AUTHORIZATION
MPE Engineering Ltd.
Number C1334
Permission to Consult held by:

Discipline	Sk. Reg. No.	Signature
CIVIL	52866	

PROFESSIONAL ENGINEER
KAGORO
MEMBER 52866
2021-01-18
YR. MN. DAY
SASKATCHEWAN

MPE Engineering Ltd.

ENGLISH RIVER ENTERPRISES
PROPERTY MANAGEMENT LP

WASTEWATER TREATMENT PLANT
PROCESS PIPING
SUEZ EQUIPMENT TAG LIST
SHEET 2

DESIGNED	I.K.	JOB	7603-002-00
DRAWN	C.A.Z.	SCALE	NTS
DATE	NOVEMBER 2020	DRAWING	P1.16

SUEZ P&ID	SUEZ TAG	MPE P&ID	MPE TAG	EQUIPMENT DESCRIPTION
DS 110(2 OF 2)	15-LSL-601	P1.12	LSL 7641	LEVEL SWITCH (LOW)
DS 110(2 OF 2)	15-P-601-A	P1.12	P 7641A	CHEMICAL PUMP
DS 110(2 OF 2)	15-P-601-B	P1.12	P 7641B	CHEMICAL PUMP, STANDBY
DS 110(2 OF 2)	15-FQI-601	P1.12	CC 7641	CALIBRATION COLUMN
DS 110(2 OF 2)	15-PI-603	P1.12	PI 7641	PRESSURE INDICATOR
DS 110(2 OF 2)	15-PSV-XXX	P1.12	PSV 7641	PRESSURE SUSTAINING VALVE
DS 110(2 OF 2)	15-PCV-601	P1.12	BPV 7641	BACKFLOW PRESSURE VALVE
DS 110(2 OF 2)	15-HV-XXX	P1.12	BAV 7648	BALL VALVE
DS 110(2 OF 2)	15-CV-XXX	P1.12	CHV 7648	CHECK VALVE
DS 110(2 OF 2)	15-XXX-XXX	P1.12	STR 7648	STRAINER
DS 110(2 OF 2)	15-PSV-601-A	P1.12	--	PRESSURE SUSTAINING VALVE
DS 110(2 OF 2)	15-PSV-601-B	P1.12	--	PRESSURE SUSTAINING VALVE
DS 110(2 OF 2)	15-HV-601-A	P1.12	BAV 7641J	BALL VALVE
DS 110(2 OF 2)	15-HV-602-A	P1.12	BAV 7641X	BALL VALVE
DS 110(2 OF 2)	15-HV-602-B	P1.12	BAV 7641X	BALL VALVE
DS 110(2 OF 2)	15-HV-605	P1.12	BAV 7641X	BALL VALVE
DS 110(2 OF 2)	15-HV-604-A	P1.12	BAV 7641X	BALL VALVE
DS 110(2 OF 2)	15-HV-604-B	P1.12	BAV 7641X	BALL VALVE
DS 110(2 OF 2)	15-HV-603-A	P1.12	BAV 7641X	BALL VALVE
DS 110(2 OF 2)	15-HV-603-B	P1.12	BAV 7641X	BALL VALVE
DS 110(2 OF 2)	15-HV-606-A	P1.12	BAV 7641X	BALL VALVE
DS 110(2 OF 2)	15-HV-606-B	P1.12	BAV 7641X	BALL VALVE
COMPRESSOR SYSTEM				
DS 111	90-F-001-A	P1.13	F 6008A	FILTER
DS 111	90-F-001-B	P1.13	F 6008B	FILTER
DS 111	90-AC-001-A	P1.13	AC 6008A	AIR COMPRESSOR
DS 111	90-AC-001-B	P1.13	AC 6008B	AIR COMPRESSOR
DS 111	90-TK-001	P1.13	TK 6008	AIR RECEIVER TANK
DS 111	90-PSL-001	P1.13	PSL 6008	PRESSURE SWITCH (LOW)
DS 111	90-PI-001	P1.13	PI 6008	PRESSURE INDICATOR
DS 111	90-PSV-001	P1.13	PSV 6008	PRESSURE SUSTAINING VALVE
DS 111	90-HV-001	P1.13	BAV 6008	BUTTERFLY VALVE
DS 111	90-FV-001	P1.13	FV 6008A	FLOW VALVE
DS 111	90-HV-004	P1.13	BAV 6008A	BALL VALVE
DS 111	90-F-020	P1.13	FI 6008	FILTER
DS 111	90-DPI-101	P1.13	PDI 6008	DIFFERENTIAL PRESS. TRANSMITTER
DS 111	90-HV-005	P1.13	BAV 6008B	BALL VALVE
DS 111	90-HV-006	P1.13	BAV 6008C	BALL VALVE
DS 111	90-PSL-003	P1.13	PSL 6031	PRESSURE SWITCH (LOW)
DS 111	90-PV-001	P1.13	PRV 6013	PRESSURE REDUCING VALVE
DS 111	90-PSLL-002	P1.13	PSLL 6031	PRESSURE SWITCH (LOW LOW)
DS 111	90-HV-002-A	P1.13	BAV 6008D	BALL VALVE
DS 111	90-HV-002-B	P1.13	BAV 6008E	BALL VALVE
DS 111	90-DR-001-A	P1.13	DR 6009A	AIR DRYER
DS 111	90-DR-001-B	P1.13	DR 6009B	AIR DRYER, STANDBY
DS 111	90-HV-003-A	P1.13	BAV 6008F	BALL VALVE
DS 111	90-HV-003-B	P1.13	BAV 6008G	BALL VALVE
DS 111	90-FV-011	P1.13	FV 6008B	FLOW VALVE
DS 111	90-HV-XXX	P1.13	BAV 6008H	BALL VALVE
DS 111	90-HV-XXX	P1.13	BAV 6008I	BALL VALVE
DS 111	90-HV-XXX	P1.13	BAV 6008J	BALL VALVE
DS 111	90-PRV-XXX	P1.13	PRV 6019	PRESSURE REDUCING VALVE
DS 111	90-FV-XXX	P1.13	FV 9900A	ACCESS CTRL PNEUMATIC STRIKER
DS 111	90-FV-XXX	P1.13	FV 9900B	ACCESS CTRL PNEUMATIC STRIKER

THIS DRAWING MAY HAVE BEEN MODIFIED FROM ITS ORIGINAL SIZE. ALL SCALE NOTATIONS INDICATED ARE BASED ON 11"x17" FORMAT DRAWINGS

ISSUE	YY-MM-DD	REVISION
2	21-01-15	FOR CONSTRUCTION
1	20-10-15	FOR TENDER

Association of Professional Engineers & Geoscientists of Saskatchewan
CERTIFICATE OF AUTHORIZATION
MPE Engineering Ltd.
Number C1334
Permission to Consult held by:

Discipline	Sk. Reg. No.	Signature
CIVIL	52866	

PROFESSIONAL ENGINEER
I. KAGOBO
MEMBER 52866
2021-01-18
YR. MN. DAY
SASKATCHEWAN

MPE Engineering Ltd.

ENGLISH RIVER ENTERPRISES
PROPERTY MANAGEMENT LP

WASTEWATER TREATMENT PLANT
PROCESS PIPING
SUEZ EQUIPMENT TAG LIST
SHEET 3

DESIGNED	I.K.	JOB	7603-002-00
DRAWN	C.A.Z.	SCALE	NTS
DATE	NOVEMBER 2020	DRAWING	P1.17

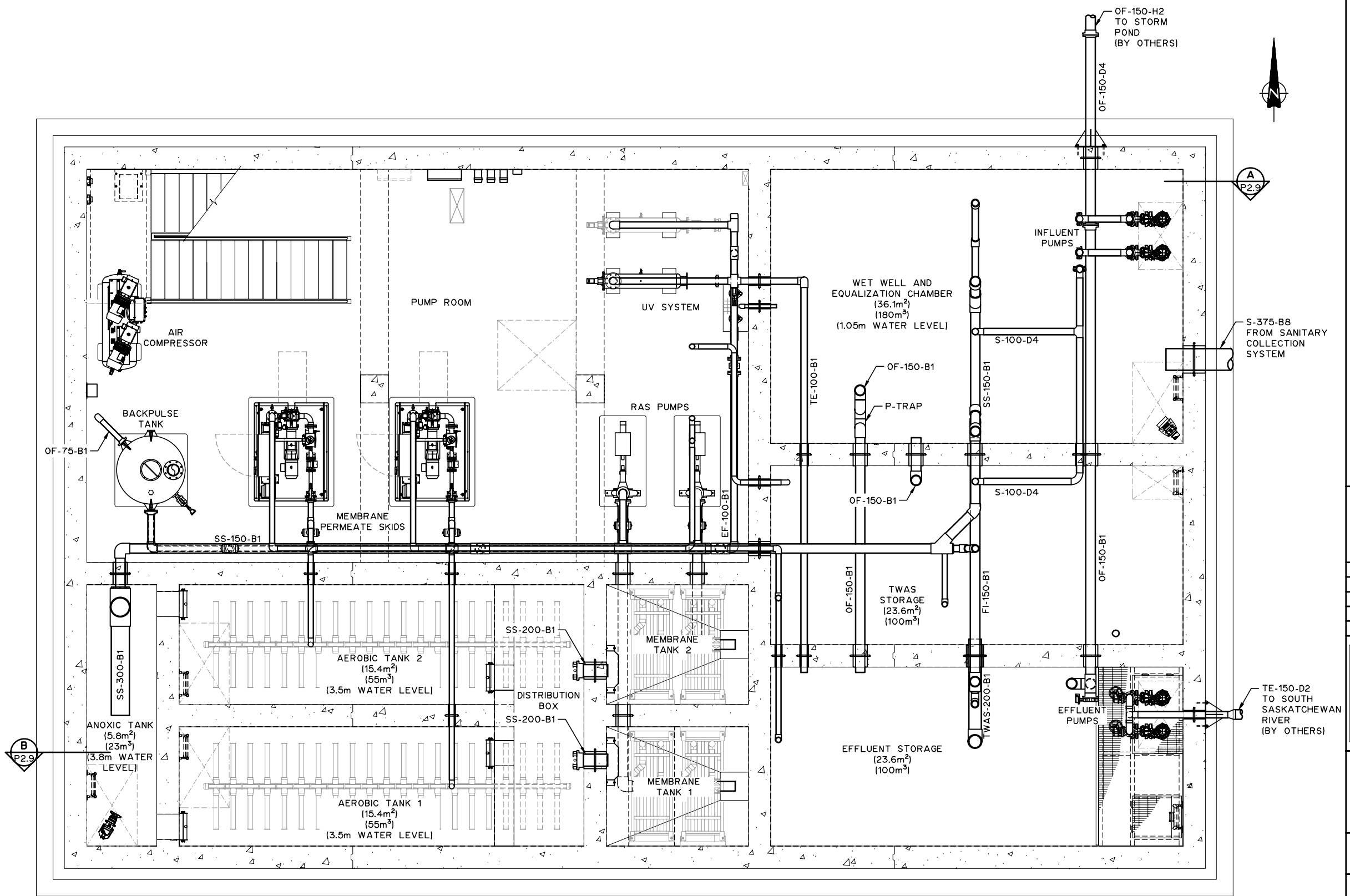

NOTES:

1. FOR INFORMATION REGARDING GENERAL NOTES, UTILITIES, ABBREVIATIONS AND SYMBOLS, REFER TO THE LEGEND DRAWINGS.
2. CONTRACTOR TO PROVIDE SUPPORT FOR PIPING AND FITTINGS AS PER PIPING AND SUPPORT MANUFACTURER'S RECOMMENDATIONS.
3. STEEL PIPES LARGER THAN 75Φ SHALL NOT BE SUPPORTED FROM THE ROOF SYSTEM UNLESS NOTED OTHERWISE.
4. PVC PIPES LARGER THAN 150Φ SHALL NOT BE SUPPORTED FROM THE ROOF SYSTEM UNLESS NOTED OTHERWISE.

THIS DRAWING MAY HAVE BEEN MODIFIED FROM ITS ORIGINAL SIZE. ALL SCALE NOTATIONS INDICATED ARE BASED ON 11"x17" FORMAT DRAWINGS

ISSUE	YY-MM-DD	REVISION
2	21-01-15	FOR CONSTRUCTION
1	20-10-15	FOR TENDER

Association of Professional Engineers & Geoscientists of Saskatchewan
CERTIFICATE OF AUTHORIZATION
MPE Engineering Ltd.
Number C1334
Permission to Consult held by:

Discipline	Sk. Reg. No.	Signature
CIVIL	52866	

PROFESSIONAL ENGINEER
KAGORO
MEMBER 52866
2021-01-18
YR. MN. DAY
SASKATCHEWAN

MPE Engineering Ltd.

ENGLISH RIVER ENTERPRISES
PROPERTY MANAGEMENT LP

WASTEWATER TREATMENT PLANT
PROCESS PIPING
LOWER LEVEL PLAN

DESIGNED	I.K.	JOB	7603-002-00
DRAWN	L.J.S.	SCALE	1:75
DATE	NOVEMBER 2020	DRAWING	P2.1

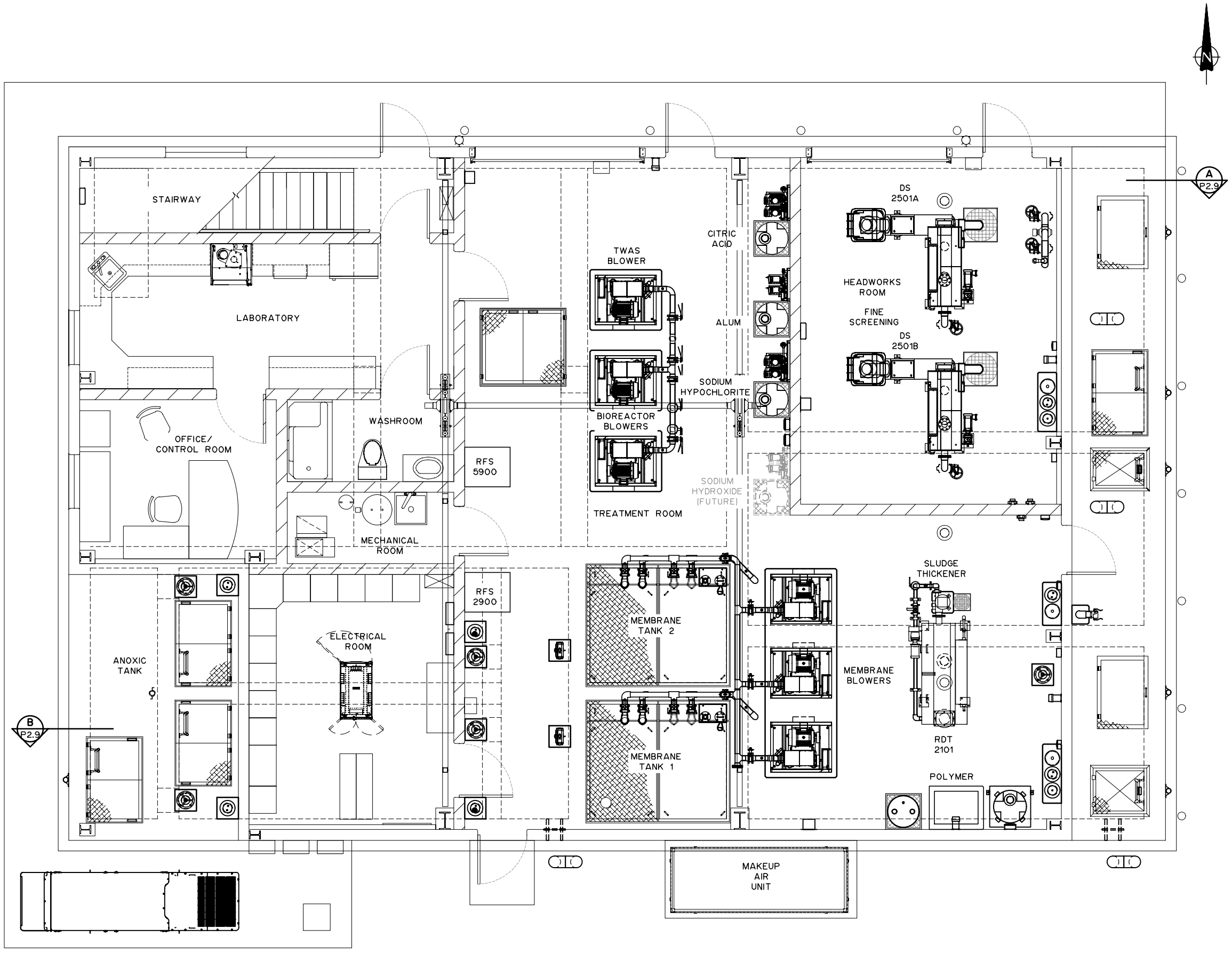

NOTES:

1. FOR INFORMATION REGARDING GENERAL NOTES, UTILITIES, ABBREVIATIONS AND SYMBOLS, REFER TO THE LEGEND DRAWINGS.
2. CONTRACTOR TO PROVIDE SUPPORT FOR PIPING AND FITTINGS AS PER PIPING AND SUPPORT MANUFACTURER'S RECOMMENDATIONS.
3. STEEL PIPES LARGER THAN 75Φ SHALL NOT BE SUPPORTED FROM THE ROOF SYSTEM UNLESS NOTED OTHERWISE.
4. PVC PIPES LARGER THAN 150Φ SHALL NOT BE SUPPORTED FROM THE ROOF SYSTEM UNLESS NOTED OTHERWISE.

THIS DRAWING MAY HAVE BEEN MODIFIED FROM ITS ORIGINAL SIZE. ALL SCALE NOTATIONS INDICATED ARE BASED ON 11"x17" FORMAT DRAWINGS

ISSUE	YY-MM-DD	REVISION
2	21-01-15	FOR CONSTRUCTION
1	20-10-15	FOR TENDER

Association of Professional Engineers & Geoscientists of Saskatchewan
CERTIFICATE OF AUTHORIZATION
MPE Engineering Ltd.
Number C1334
Permission to Consult held by:

Discipline	SK. Reg. No.	Signature
CIVIL	52866	

PROFESSIONAL ENGINEER
I. KAGOBE
MEMBER 52866
2021-01-18
YR. MN. DAY
SASKATCHEWAN

MPE Engineering Ltd.

ENGLISH RIVER ENTERPRISES
PROPERTY MANAGEMENT LP

WASTEWATER TREATMENT PLANT
PROCESS PIPING
MAIN LEVEL PLAN

DESIGNED	I.K.	JOB	7603-002-00
DRAWN	L.J.S.	SCALE	1:75
DATE	NOVEMBER 2020	DRAWING	P2.2

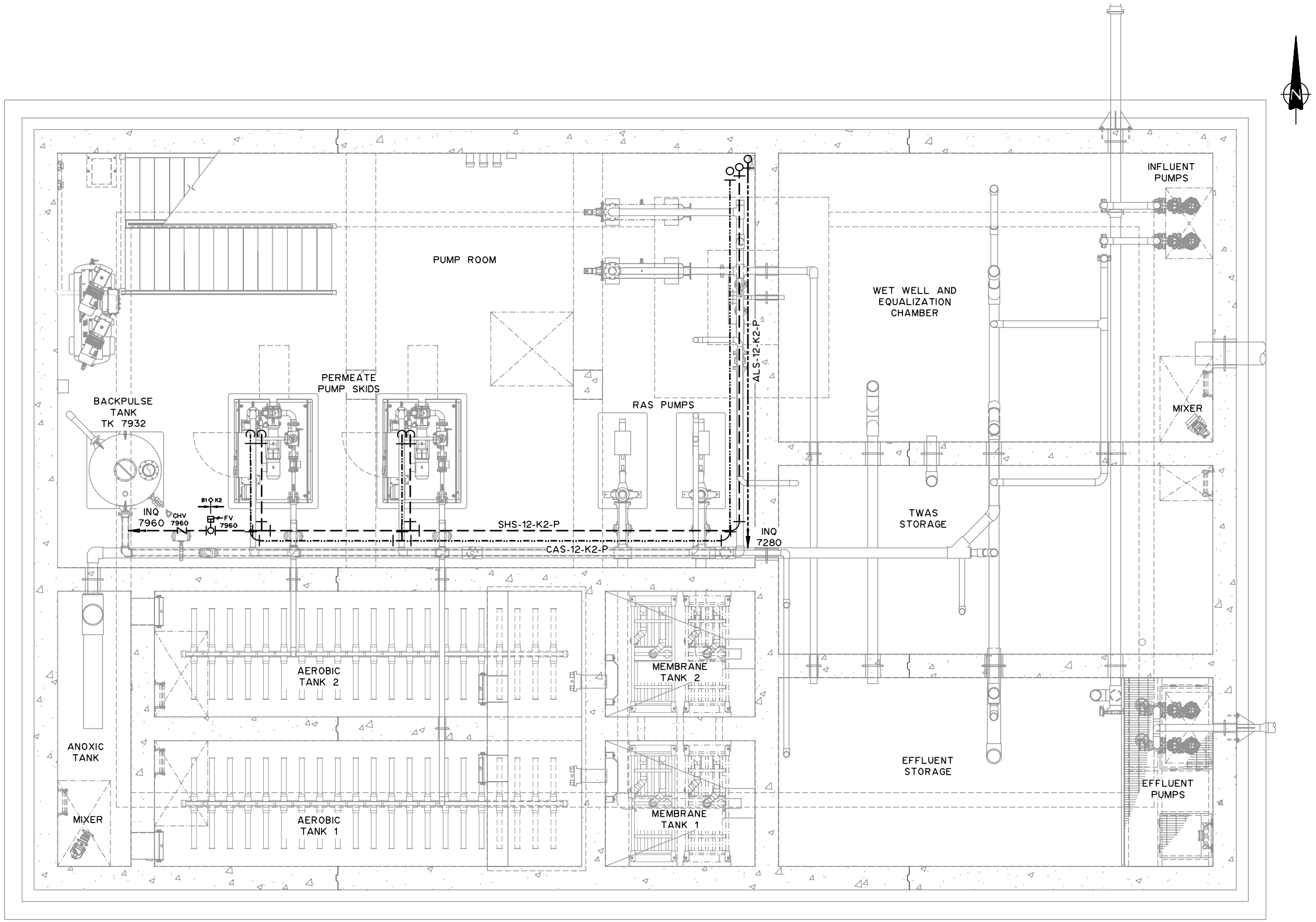

NOTES:

1. FOR INFORMATION REGARDING GENERAL NOTES, UTILITIES, ABBREVIATIONS AND SYMBOLS, REFER TO THE LEGEND DRAWINGS.
2. CONTRACTOR TO PROVIDE SUPPORT FOR PIPING AND FITTINGS AS PER PIPING AND SUPPORT MANUFACTURER'S RECOMMENDATIONS.
3. PIPING IS SHOWN SCHEMATICALLY ONLY. CONTRACTOR IS TO MOUNT PIPE ON RACKS AND WALLS TO CARRY OUT WORK IN NEATEST POSSIBLE MANNER. CONTRACTOR TO COORDINATE WITH ENGINEER WITH RESPECT TO PIPING ROUTES PRIOR TO CARRYING OUT WORK.

LEGEND

- ALUM SULPHATE SOLUTION
- POLYMER SOLUTION
- SODIUM HYPOCHLORITE
- CITRIC ACID SOLUTION

THIS DRAWING MAY HAVE BEEN MODIFIED FROM ITS ORIGINAL SIZE. ALL SCALE NOTATIONS INDICATED ARE BASED ON 11"x17" FORMAT DRAWINGS

ISSUE	YY-MM-DD	REVISION
2	21-01-15	FOR CONSTRUCTION
1	20-10-15	FOR TENDER

Association of Professional Engineers & Geoscientists of Saskatchewan
CERTIFICATE OF AUTHORIZATION
MPE Engineering Ltd.
Number C1334
Permission to Consult held by:

Discipline	Sk. Reg. No.	Signature
CIVIL	52866	

PROFESSIONAL ENGINEER
KAGORO
MEANJEET SINGH
2021-01-18
YR. MN. DAY
SASKATCHEWAN

MPE Engineering Ltd.

ENGLISH RIVER ENTERPRISES PROPERTY MANAGEMENT LP

WASTEWATER TREATMENT PLANT
PROCESS PIPING
CHEMICAL FEED PIPING SCHEMATIC
LOWER LEVEL FLOOR PLAN

DESIGNED	I.K.	JOB	7603-002-00
DRAWN	L.J.S.	SCALE	1:75
DATE	NOVEMBER 2020	DRAWING	P2.3

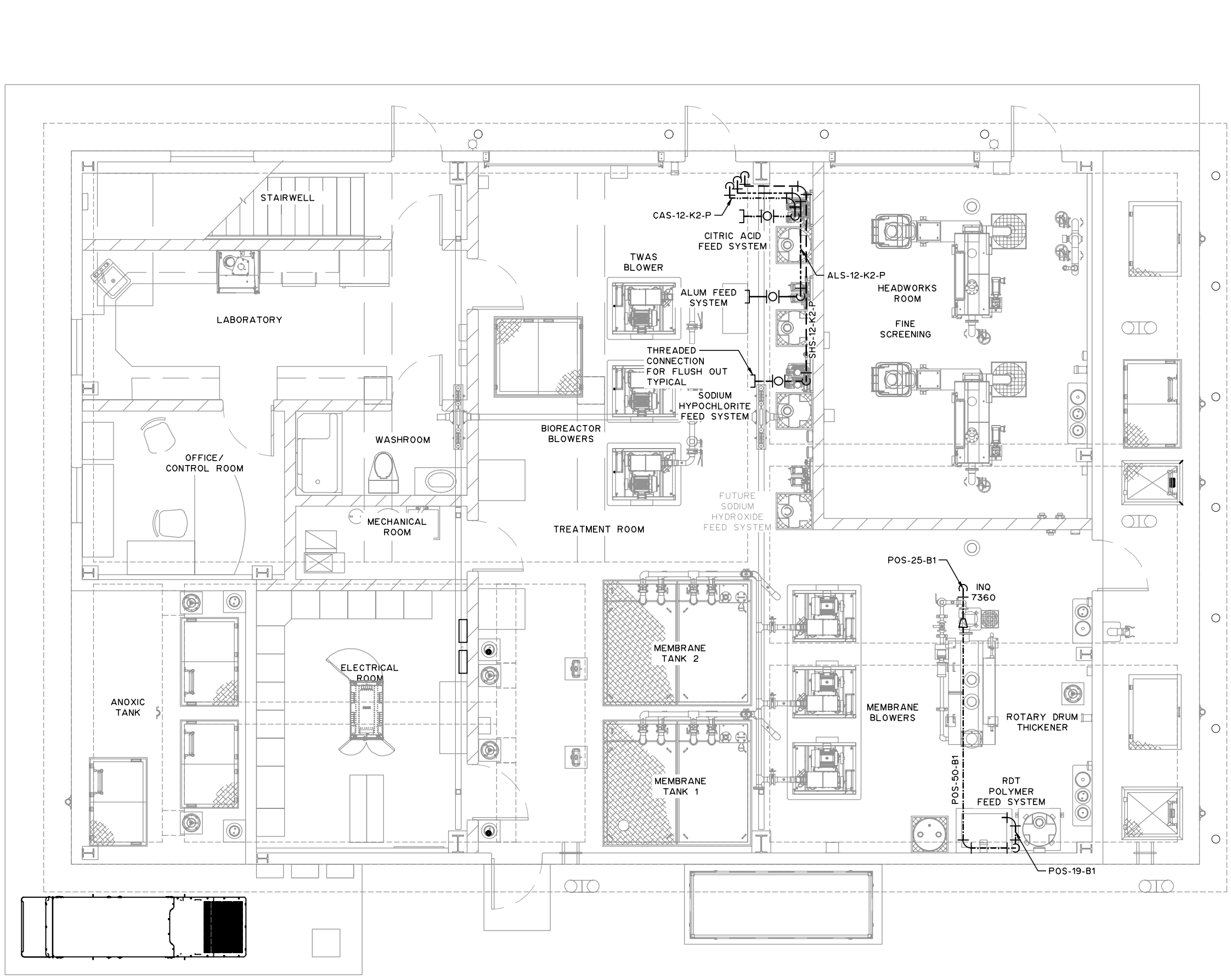

NOTES:

1. FOR INFORMATION REGARDING GENERAL NOTES, UTILITIES, ABBREVIATIONS AND SYMBOLS, REFER TO THE LEGEND DRAWINGS.
2. CONTRACTOR TO PROVIDE SUPPORT FOR PIPING AND FITTINGS AS PER PIPING AND SUPPORT MANUFACTURER'S RECOMMENDATIONS.
3. PIPING IS SHOWN SCHEMATICALLY ONLY. CONTRACTOR IS TO MOUNT PIPE ON RACKS AND WALLS TO CARRY OUT WORK IN NEATEST POSSIBLE MANNER. CONTRACTOR TO COORDINATE WITH ENGINEER WITH RESPECT TO PIPING ROUTES PRIOR TO CARRYING OUT WORK.

LEGEND

- ALUM SULPHATE SOLUTION
- POLYMER SOLUTION
- SODIUM HYPOCHLORITE
- CITRIC ACID SOLUTION

THIS DRAWING MAY HAVE BEEN MODIFIED FROM ITS ORIGINAL SIZE. ALL SCALE NOTATIONS INDICATED ARE BASED ON 11"x17" FORMAT DRAWINGS

ISSUE	YY-MM-DD	REVISION
2	21-01-15	FOR CONSTRUCTION
1	20-10-15	FOR TENDER

Association of Professional Engineers & Geoscientists of Saskatchewan
CERTIFICATE OF AUTHORIZATION
MPE Engineering Ltd.
Number C1334
Permission to Consult held by:

Discipline	SK. Reg. No.	Signature
CIVIL	52866	

PROFESSIONAL ENGINEER
KAGORO
MEMBER 52866
2021-01-18
YR. MN. DAY
SASKATCHEWAN

MPE Engineering Ltd.

ENGLISH RIVER ENTERPRISES
PROPERTY MANAGEMENT LP

WASTEWATER TREATMENT PLANT
PROCESS PIPING
CHEMICAL FEED PIPING SCHEMATIC
MAIN LEVEL FLOOR PLAN

DESIGNED	I.K.	JOB	7603-002-00
DRAWN	L.J.S.	SCALE	1:75
DATE	NOVEMBER 2020	DRAWING	P2.4

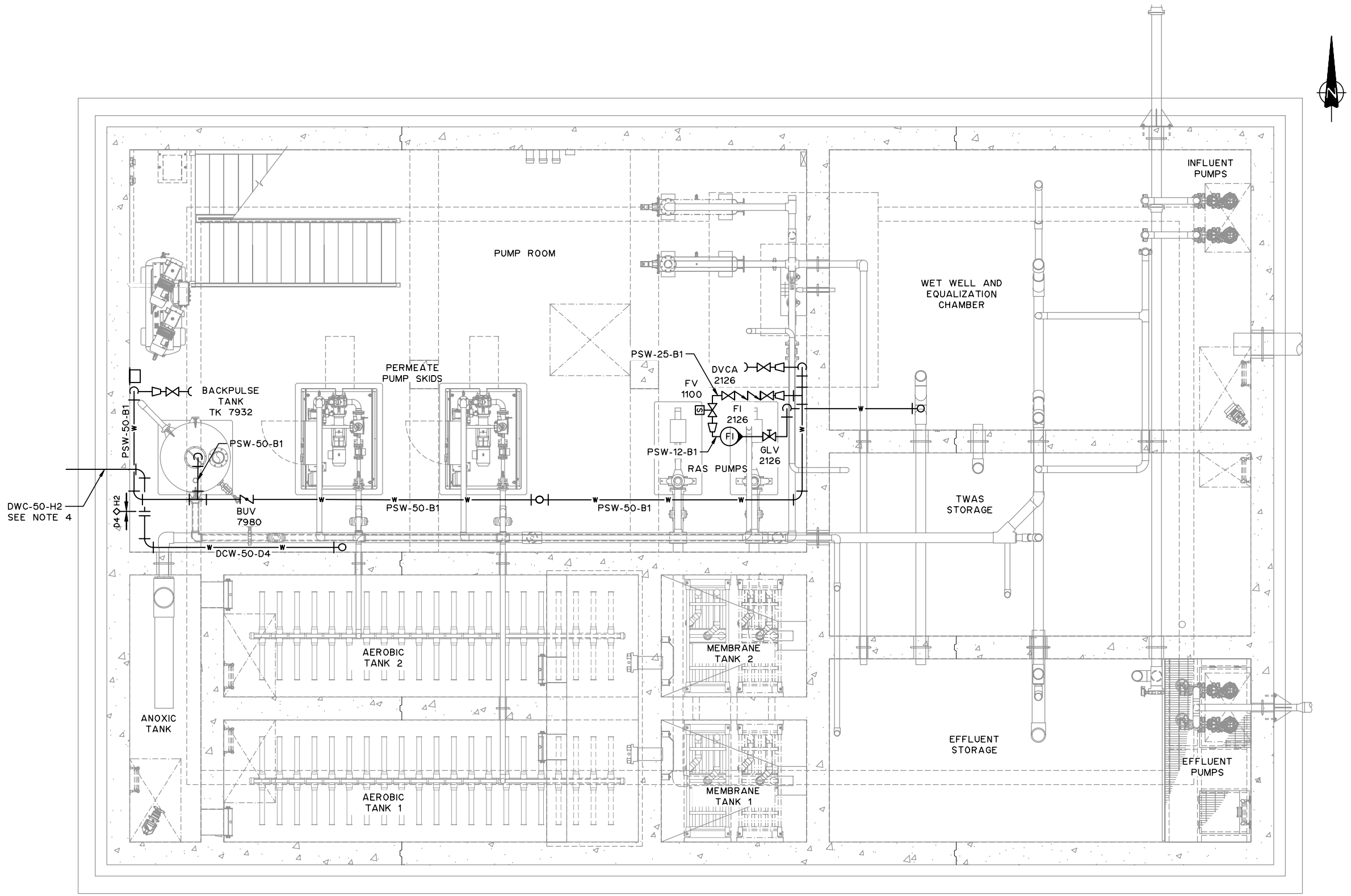

NOTES:

1. CONTRACTOR TO PROVIDE SUPPORT FOR PIPING AND FITTINGS AS PER PIPING AND SUPPORT MANUFACTURER'S RECOMMENDATIONS.
2. STEEL PIPES LARGER THAN 75Φ SHALL NOT BE SUPPORTED FROM THE ROOF SYSTEM UNLESS NOTED OTHERWISE.
3. PVC PIPES LARGER THAN 150Φ SHALL NOT BE SUPPORTED FROM THE ROOF SYSTEM UNLESS NOTED OTHERWISE.
4. CONTRACTOR TO CONNECT TO MUNICIPAL POTABLE WATERLINE. SEE DRAWING M2.4.
5. PIPING IS SHOWN SCHEMATICALLY ONLY. CONTRACTOR TO MOUNT PIPE ON RACKS AND WALLS TO CARRY OUT WORK IN NEATEST POSSIBLE MANNER. CONTRACTOR TO COORDINATE WITH ENGINEER WITH RESPECT TO PIPING ROUTES PRIOR TO CARRYING OUT WORK.

LEGEND

—W—	PLANT SERVICE WATER
	EMERGENCY SHOWER
	HOSE REEL
	HOSE BIBB

THIS DRAWING MAY HAVE BEEN MODIFIED FROM ITS ORIGINAL SIZE. ALL SCALE NOTATIONS INDICATED ARE BASED ON 11"x17" FORMAT DRAWINGS

ISSUE	YY-MM-DD	REVISION
2	21-01-15	FOR CONSTRUCTION
1	20-10-15	FOR TENDER

Association of Professional Engineers & Geoscientists of Saskatchewan
CERTIFICATE OF AUTHORIZATION
MPE Engineering Ltd.
Number C1334
Permission to Consult held by:

Discipline	Sk. Reg. No.	Signature
CIVIL	52866	

PROFESSIONAL ENGINEER
KAGORO
MEMBER 52866
2021-01-18
YR. MN. DAY
SASKATCHEWAN

MPE Engineering Ltd.

ENGLISH RIVER ENTERPRISES PROPERTY MANAGEMENT LP

WASTEWATER TREATMENT PLANT
PROCESS PIPING
PLANT SERVICE WATER
PIPING SCHEMATIC
LOWER LEVEL FLOOR PLAN

DESIGNED	I.K.	JOB	7603-002-00
DRAWN	L.J.S.	SCALE	1:75
DATE	NOVEMBER 2020	DRAWING	P2.5

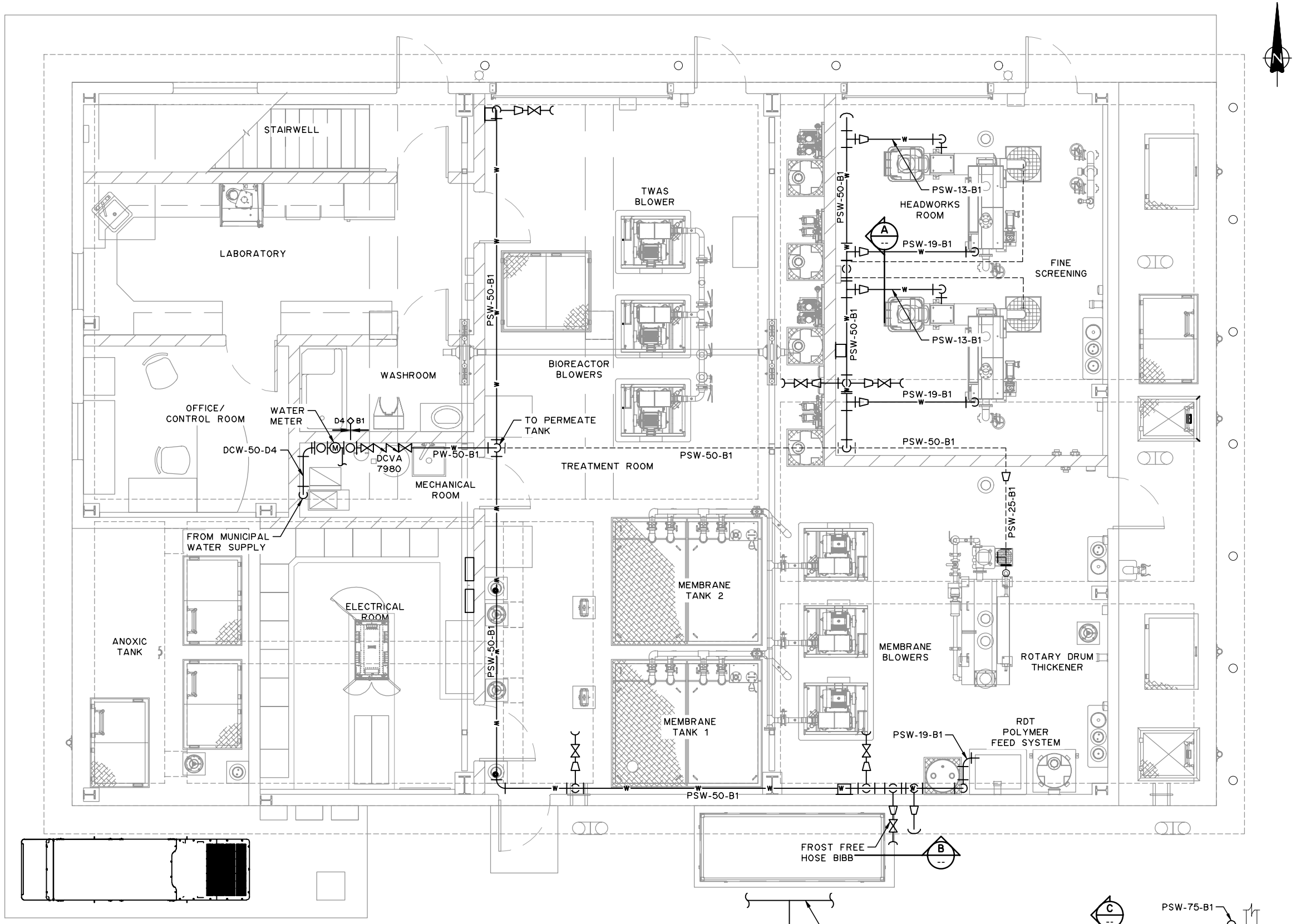

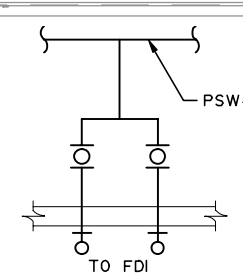

A NTS

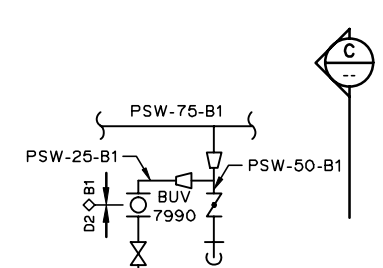

B NTS

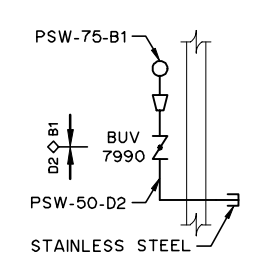

C

NOTES:

1. CONTRACTOR TO PROVIDE SUPPORT FOR PIPING AND FITTINGS AS PER PIPING AND SUPPORT MANUFACTURER'S RECOMMENDATIONS.
2. STEEL PIPES LARGER THAN 75Φ SHALL NOT BE SUPPORTED FROM THE ROOF SYSTEM UNLESS NOTED OTHERWISE.
3. PVC PIPES LARGER THAN 150Φ SHALL NOT BE SUPPORTED FROM THE ROOF SYSTEM UNLESS NOTED OTHERWISE.
4. PIPING IS SHOWN SCHEMATICALLY ONLY. CONTRACTOR TO MOUNT PIPE ON RACKS AND WALLS TO CARRY OUT WORK IN NEATEST POSSIBLE MANNER. CONTRACTOR TO COORDINATE WITH ENGINEER WITH RESPECT TO PIPING ROUTES PRIOR TO CARRYING OUT WORK.
5. CONTRACTOR TO CONNECT TO MUNICIPAL POTABLE WATERLINE. SEE DRAWING MX.X.

LEGEND

—w—	PLANT SERVICE WATER
- - - - - -	PLANT SERVICE WATER (BELOW SLAB)
	EMERGENCY SHOWER
	HOSE REEL
	HOSE BIBB

THIS DRAWING MAY HAVE BEEN MODIFIED FROM ITS ORIGINAL SIZE. ALL SCALE NOTATIONS INDICATED ARE BASED ON 11"x17" FORMAT DRAWINGS

ISSUE	YY-MM-DD	REVISION
2	21-01-15	FOR CONSTRUCTION
1	20-10-15	FOR TENDER

Association of Professional Engineers & Geoscientists of Saskatchewan
CERTIFICATE OF AUTHORIZATION
MPE Engineering Ltd.
Number C1334
Permission to Consult held by:

Discipline	Sk. Reg. No.	Signature
CIVIL	52866	

PROFESSIONAL ENGINEER
KAGORO
MEMBER 52866
2021-01-18
YR. MN. DAY
SASKATCHEWAN

MPE Engineering Ltd.

ENGLISH RIVER ENTERPRISES
PROPERTY MANAGEMENT LP

WASTEWATER TREATMENT PLANT
PROCESS PIPING
PLANT SERVICE WATER
PIPING SCHEMATIC
MAIN LEVEL FLOOR PLAN

DESIGNED	I.K.	JOB	7603-002-00
DRAWN	L.J.S.	SCALE	1:75
DATE	NOVEMBER 2020	DRAWING	P2.6

LEGEND

- STAINLESS STEEL (UNREGULATED PRESSURE)
- STAINLESS STEEL (90 PSI FOR FIELD DEVICES, ETC.)
- STAINLESS STEEL (30 PSI FOR AIR SCRUBS)
- QUICK CONNECT AND ISOLATION BALL VALVE
- INLINE AIR-WATER SEPERATOR

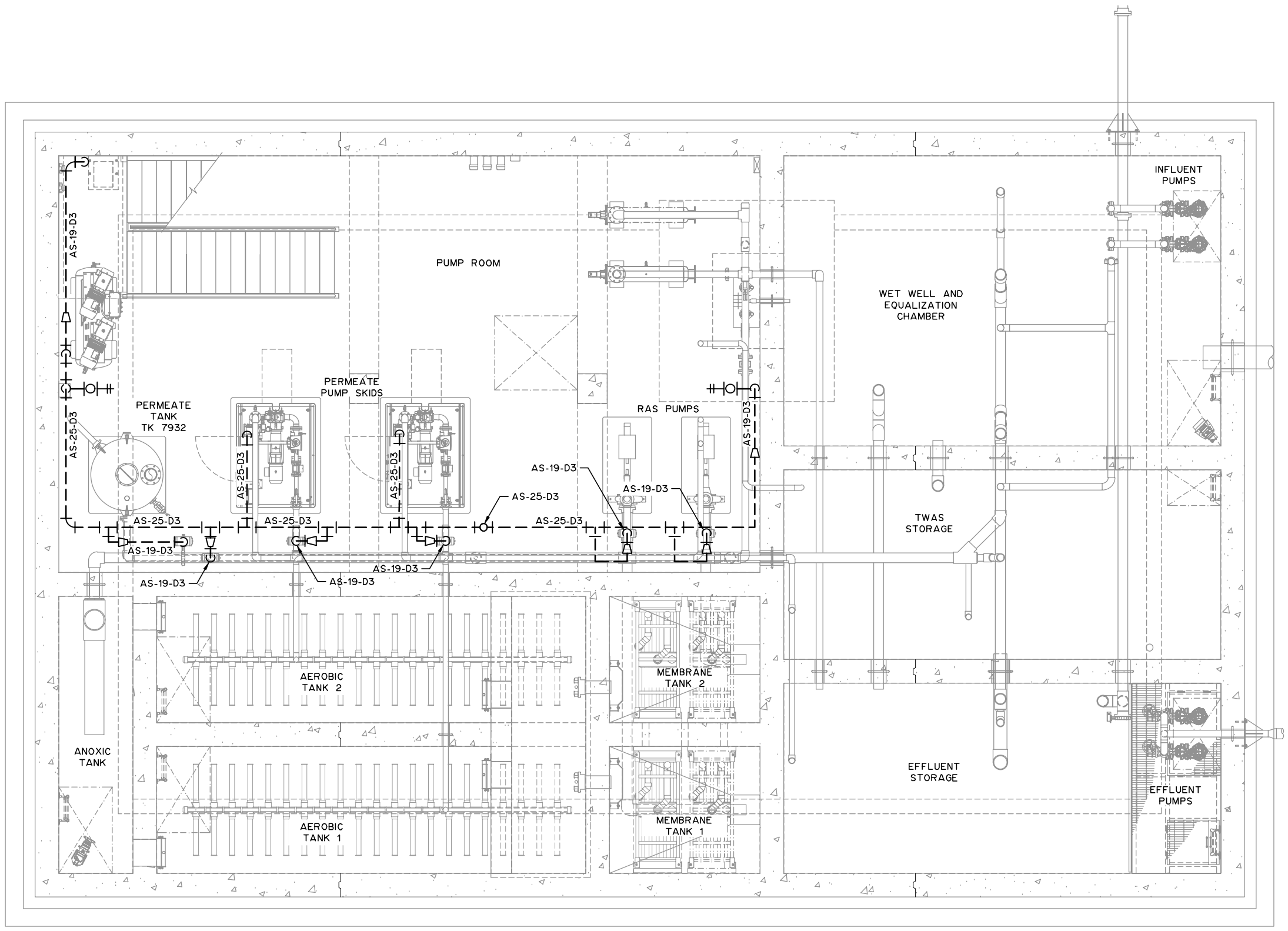

NOTES:

1. FOR INFORMATION REGARDING GENERAL NOTES, UTILITIES, ABBREVIATIONS AND SYMBOLS, REFER TO THE LEGEND DRAWINGS.
2. CONTRACTOR TO PROVIDE SUPPORT FOR PIPING AND FITTINGS AS PER MANUFACTURER'S RECOMMENDATIONS.
3. PIPING IS SHOWN SCHEMATICALLY ONLY. CONTRACTOR TO MOUNT PIPE ON RACKS AND WALLS TO CARRY OUT WORK IN NEATEST POSSIBLE MANNER. CONTRACTOR TO COORDINATE WITH ENGINEER WITH RESPECT TO PIPING ROUTES PRIOR TO CARRYING OUT WORK.
4. CONTRACTOR TO CONNECT COMPRESSED AIR SYSTEM FOR FIELD DEVICES TO CONTROL/SOLENOID RACKS IN PANELS AS PER CONTRACT DRAWINGS AND MANUFACTURER'S RECOMMENDATIONS.
5. CONTRACTOR TO CONNECT SOLENOID VALVES IN CONTROL/SOLENOID PANEL TO FIELD DEVICES WITH TUBING SUITABLE FOR SERVICE AND AS PER MANUFACTURER'S RECOMMENDATIONS.
6. CONTRACTOR TO FIELD VERIFY LOCATION OF QUICK COUPLINGS WITH ENGINEER PRIOR TO INSTALLATION.
7. CONTRACTOR TO PLUMB AN APPROPRIATE AIR SUPPLY TO ALL DEVICES. THIS DRAWING IS SCHEMATIC AND MAY NOT REPRESENT ALL REQUIRED LINES.

THIS DRAWING MAY HAVE BEEN MODIFIED FROM ITS ORIGINAL SIZE. ALL SCALE NOTATIONS INDICATED ARE BASED ON 11"x17" FORMAT DRAWINGS

ISSUE	YY-MM-DD	REVISION
2	21-01-15	FOR CONSTRUCTION
1	20-10-15	FOR TENDER

Association of Professional Engineers & Geoscientists of Saskatchewan
CERTIFICATE OF AUTHORIZATION
MPE Engineering Ltd.
Number C1334
Permission to Consult held by:

Discipline	Sk. Reg. No.	Signature
CIVIL	52866	

PROFESSIONAL ENGINEER
KAGORO
MEMBER 52866
2021-01-18
YR. MN. DAY
SASKATCHEWAN

MPE Engineering Ltd.

ENGLISH RIVER ENTERPRISES PROPERTY MANAGEMENT LP

WASTEWATER TREATMENT PLANT
PROCESS PIPING
COMPRESSED AIR
PIPING SCHEMATIC
LOWER LEVEL FLOOR PLAN

DESIGNED	I.K.	JOB	7603-002-00
DRAWN	L.J.S.	SCALE	1:75
DATE	NOVEMBER 2020	DRAWING	P2.7

LEGEND

- STAINLESS STEEL (UNREGULATED PRESSURE)
- STAINLESS STEEL (90 PSI FOR FIELD DEVICES, ETC.)
- STAINLESS STEEL (30 PSI FOR AIR SCRUBS)
- QUICK CONNECT AND ISOLATION BALL VALVE
- INLINE AIR-WATER SEPERATOR

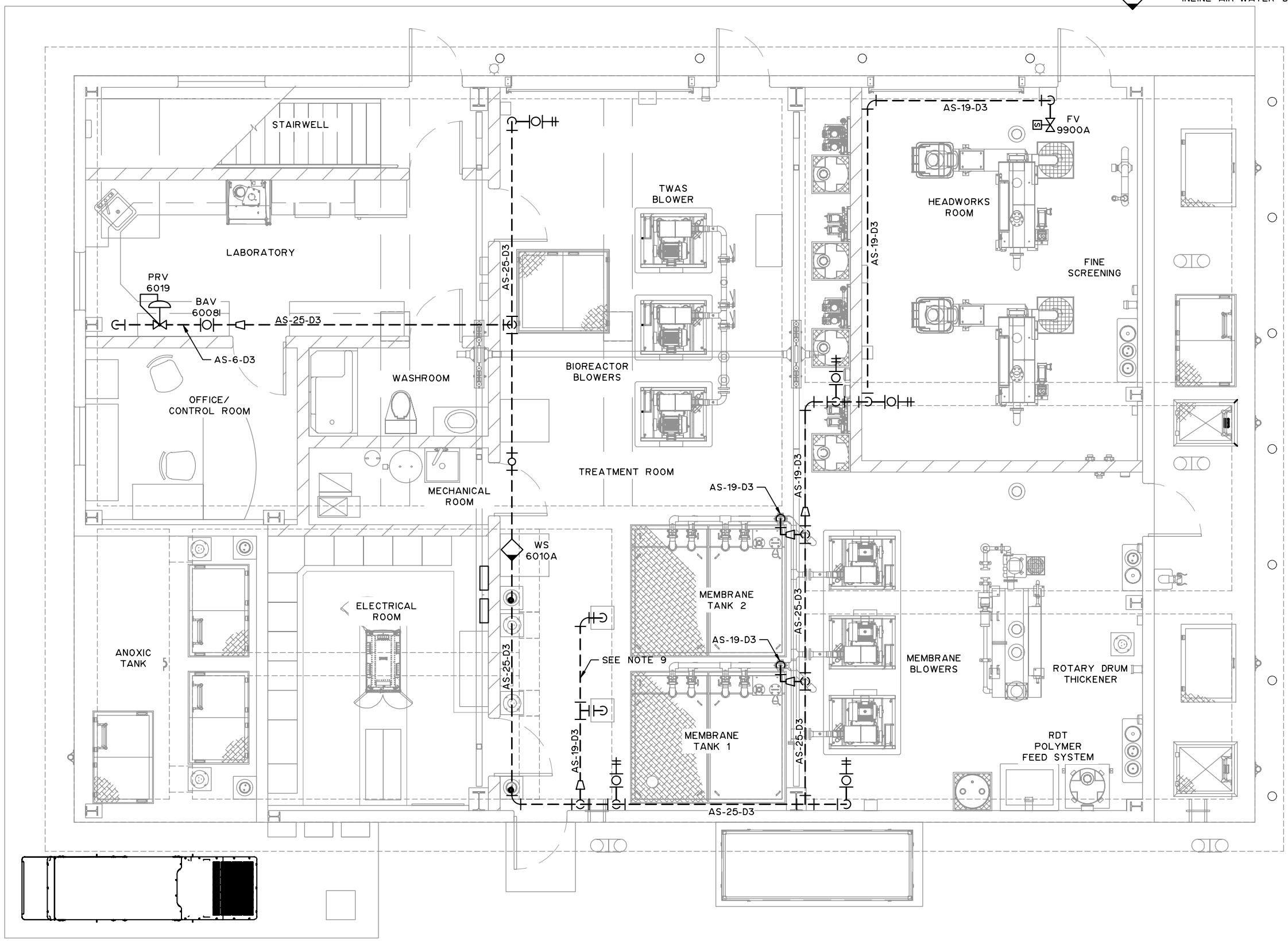

NOTES:

1. FOR INFORMATION REGARDING GENERAL NOTES, UTILITIES, ABBREVIATIONS AND SYMBOLS, REFER TO THE LEGEND DRAWINGS.
2. CONTRACTOR TO PROVIDE SUPPORT FOR PIPING AND FITTINGS AS PER MANUFACTURER'S RECOMMENDATIONS.
3. PIPING IS SHOWN SCHEMATICALLY ONLY. CONTRACTOR TO MOUNT PIPE ON RACKS AND WALLS TO CARRY OUT WORK IN NEATEST POSSIBLE MANNER. CONTRACTOR TO COORDINATE WITH ENGINEER WITH RESPECT TO PIPING ROUTES PRIOR TO CARRYING OUT WORK.
4. CONTRACTOR TO CONNECT COMPRESSED AIR SYSTEM FOR FIELD DEVICES TO CONTROL/SOLENOID RACKS IN PANELS AS PER CONTRACT DRAWINGS AND MANUFACTURER'S RECOMMENDATIONS.
5. CONTRACTOR TO CONNECT SOLENOID VALVES IN CONTROL/SOLENOID PANEL TO FIELD DEVICES WITH TUBING SUITABLE FOR SERVICE AND AS PER MANUFACTURER'S RECOMMENDATIONS.
6. CONTRACTOR TO FIELD VERIFY LOCATION OF QUICK COUPLINGS WITH ENGINEER PRIOR TO INSTALLATION.
7. CONTRACTOR TO PLUMB AN APPROPRIATE AIR SUPPLY TO ALL DEVICES. THIS DRAWING IS SCHEMATIC AND MAY NOT REPRESENT ALL REQUIRED LINES.
8. CONTRACTOR TO CONNECT TO PNEUMATIC DOOR STRIKE.
9. AIR LINE TO FLOOR STAND PNEUMATIC ACTUATORS TO BE RUN IN SLAB.

THIS DRAWING MAY HAVE BEEN MODIFIED FROM ITS ORIGINAL SIZE. ALL SCALE NOTATIONS INDICATED ARE BASED ON 11"x17" FORMAT DRAWINGS

ISSUE	YY-MM-DD	REVISION
2	21-01-15	FOR CONSTRUCTION
1	20-10-15	FOR TENDER

Association of Professional Engineers & Geoscientists of Saskatchewan
CERTIFICATE OF AUTHORIZATION
MPE Engineering Ltd.
Number C1334
Permission to Consult held by:

Discipline	Sk. Reg. No.	Signature
CIVIL	52866	

PROFESSIONAL ENGINEER — KAGORO, MICHAEL JOHN — 2021-01-18 YR. MN. DAY — SASKATCHEWAN

MPE Engineering Ltd.

ENGLISH RIVER ENTERPRISES PROPERTY MANAGEMENT LP

WASTEWATER TREATMENT PLANT
PROCESS PIPING
COMPRESSED AIR
PIPING SCHEMATIC
MAIN LEVEL FLOOR PLAN

DESIGNED	I.K.	JOB	7603-002-00
DRAWN	L.J.S.	SCALE	1:75
DATE	NOVEMBER 2020	DRAWING	P2.8

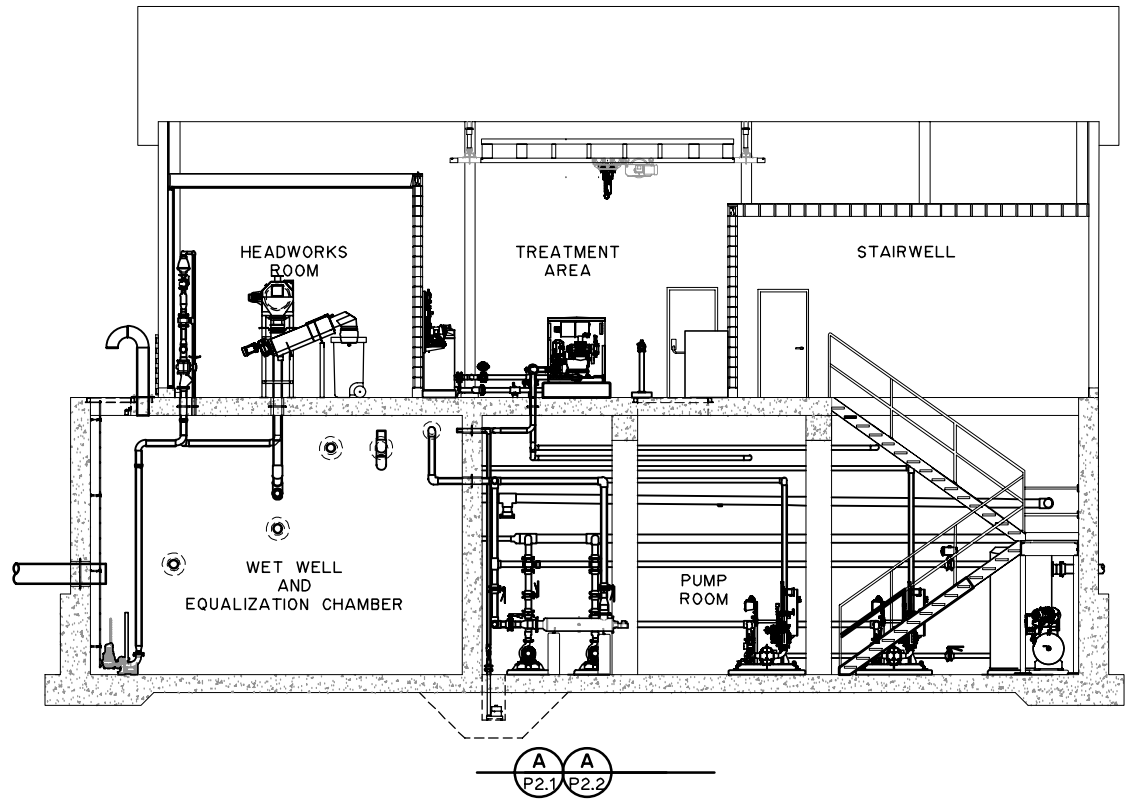

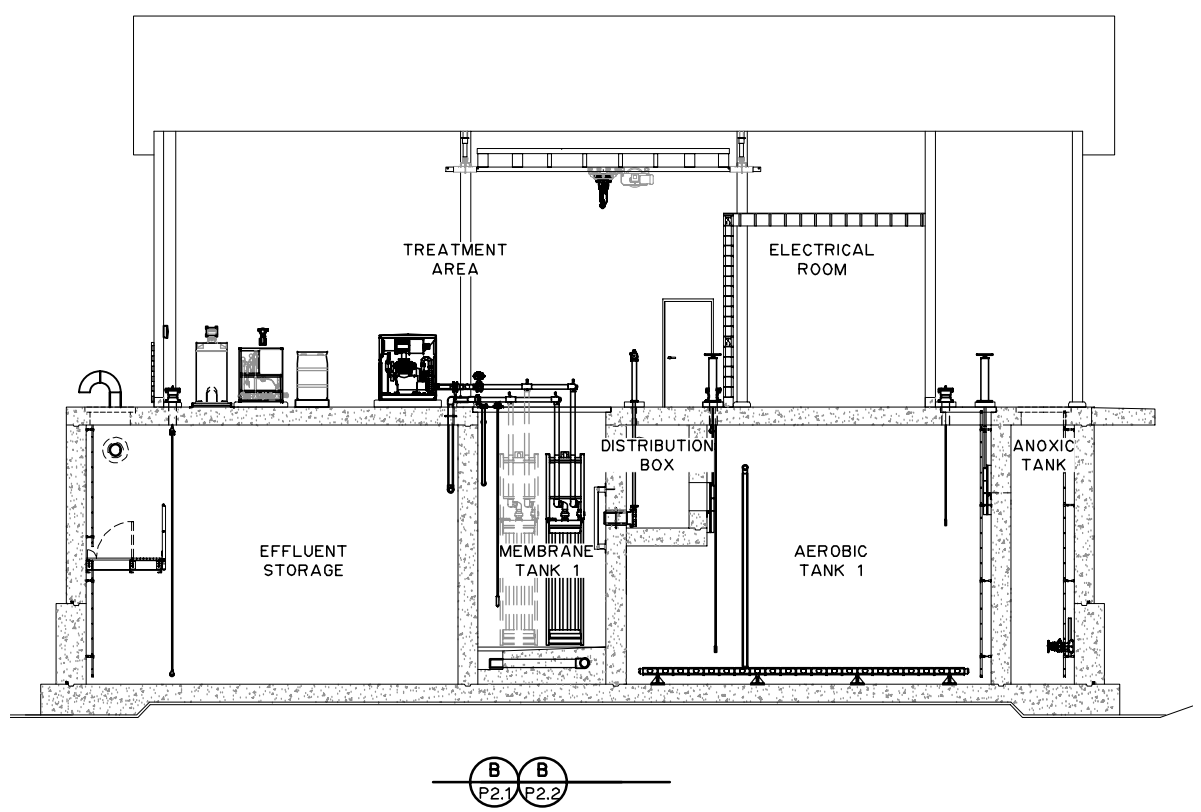

NOTES:

1. FOR INFORMATION REGARDING GENERAL NOTES, UTILITIES, ABBREVIATIONS AND SYMBOLS, REFER TO THE LEGEND DRAWINGS.

THIS DRAWING MAY HAVE BEEN MODIFIED FROM ITS ORIGINAL SIZE. ALL SCALE NOTATIONS INDICATED ARE BASED ON 11"x17" FORMAT DRAWINGS

ISSUE	YY-MM-DD	REVISION
2	21-01-15	FOR CONSTRUCTION
1	20-10-15	FOR TENDER

Association of Professional Engineers & Geoscientists of Saskatchewan
CERTIFICATE OF AUTHORIZATION
MPE Engineering Ltd.
Number C1334
Permission to Consult held by:

Discipline	Sk. Reg. No.	Signature
CIVIL	52866	

PROFESSIONAL ENGINEER
I. KASOBO
MEMBER 52866
2021-01-18
YR. MN. DAY
SASKATCHEWAN

MPE Engineering Ltd.

ENGLISH RIVER ENTERPRISES PROPERTY MANAGEMENT LP

WASTEWATER TREATMENT PLANT
PROCESS PIPING
PROCESS SECTIONS

DESIGNED	I.K.	JOB	7603-002-00
DRAWN	C.A.Z.	SCALE	1:150
DATE	NOVEMBER 2020	DRAWING	P2.9

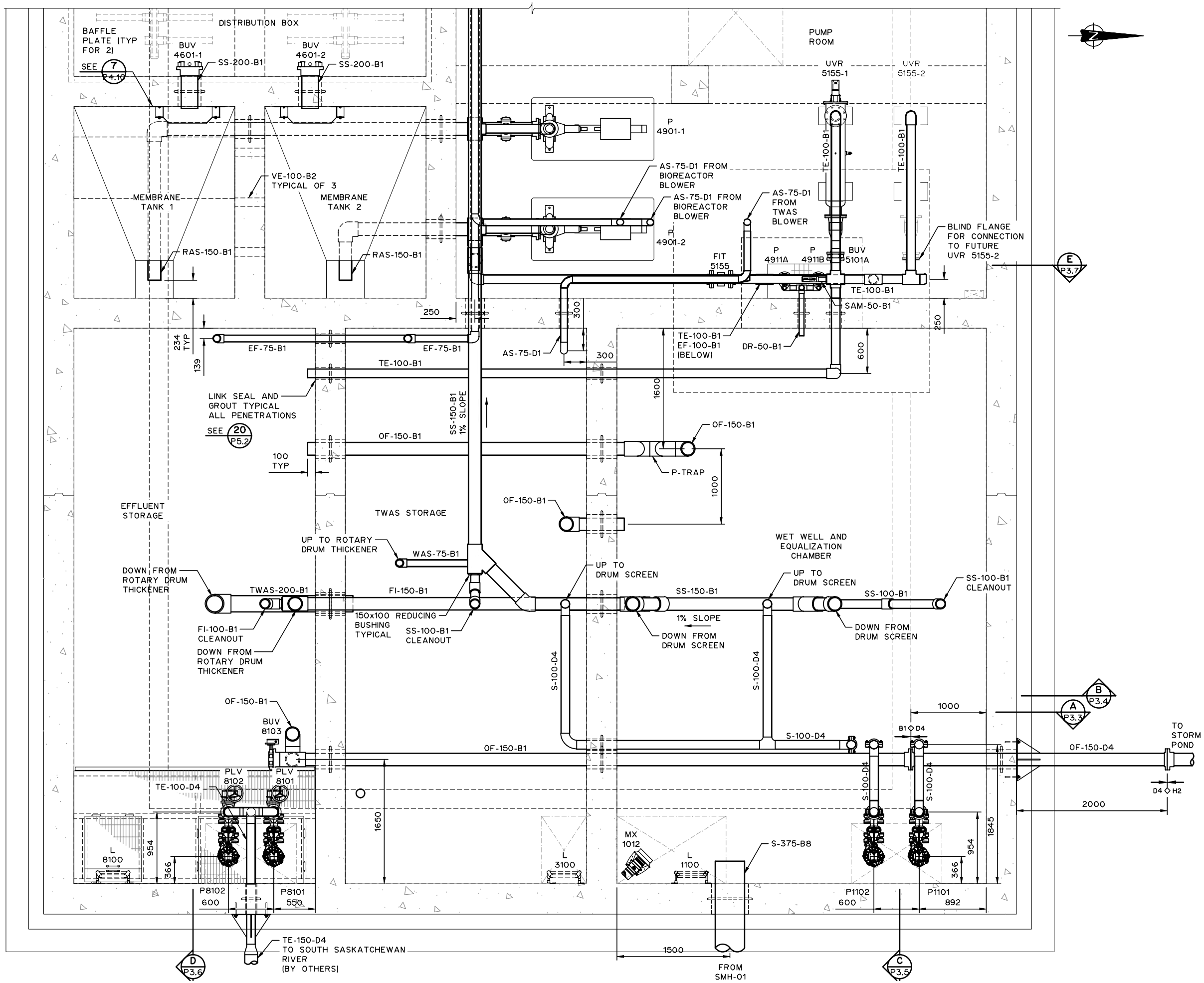

NOTES:

1. FOR INFORMATION REGARDING GENERAL NOTES, UTILITIES, ABBREVIATIONS AND SYMBOLS, REFER TO THE LEGEND DRAWINGS.
2. CONTRACTOR TO PROVIDE SUPPORT FOR PIPING AND FITTINGS AS PER PIPING AND SUPPORT MANUFACTURER'S RECOMMENDATIONS.
3. STEEL PIPES LARGER THAN 75Φ SHALL NOT BE SUPPORTED FROM THE ROOF SYSTEM UNLESS NOTED OTHERWISE.
4. PVC PIPES LARGER THAN 150Φ SHALL NOT BE SUPPORTED FROM THE ROOF SYSTEM UNLESS NOTED OTHERWISE.

THIS DRAWING MAY HAVE BEEN MODIFIED FROM ITS ORIGINAL SIZE. ALL SCALE NOTATIONS INDICATED ARE BASED ON 11"x17" FORMAT DRAWINGS

ISSUE	YY-MM-DD	REVISION
2	21-01-15	FOR CONSTRUCTION
1	20-10-15	FOR TENDER

Association of Professional Engineers & Geoscientists of Saskatchewan
CERTIFICATE OF AUTHORIZATION
MPE Engineering Ltd.
Number C1334
Permission to Consult held by:

Discipline	Sk. Reg. No.	Signature
CIVIL	52866	

PROFESSIONAL ENGINEER KAGORO MEMBER 52866 2021-01-18 YR. MN. DAY SASKATCHEWAN

MPE Engineering Ltd.

ENGLISH RIVER ENTERPRISES PROPERTY MANAGEMENT LP

WASTEWATER TREATMENT PLANT
PROCESS PIPING
HEADWORKS AND TREATMENT AREA
LOWER LEVEL PLAN

DESIGNED	I.K.	JOB	7603-002-00
DRAWN	L.J.S.	SCALE	1:50
DATE	NOVEMBER 2020	DRAWING	P3.1

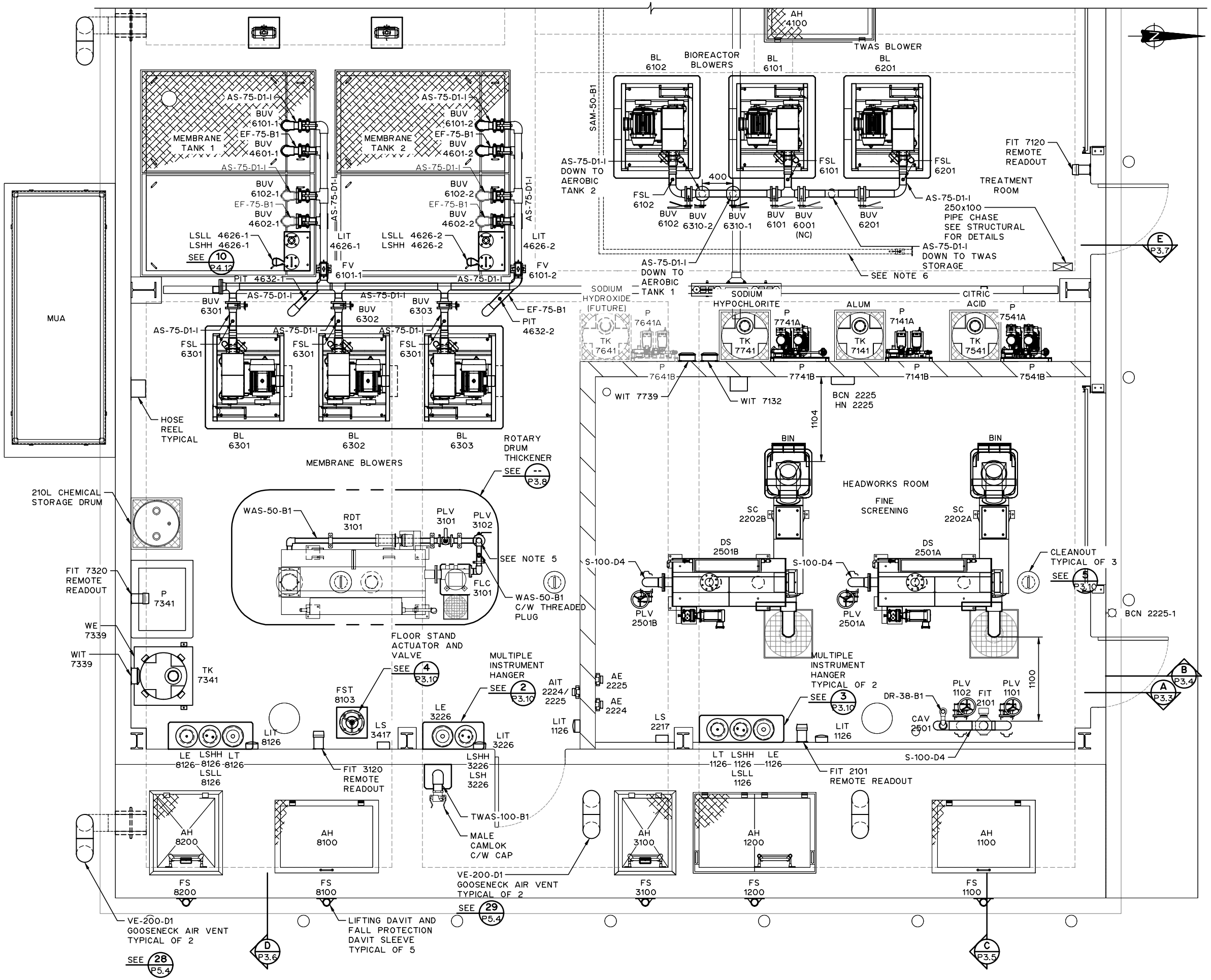

NOTES:

1. FOR INFORMATION REGARDING GENERAL NOTES, UTILITIES, ABBREVIATIONS AND SYMBOLS, REFER TO THE LEGEND DRAWINGS.
2. CONTRACTOR TO PROVIDE SUPPORT FOR PIPING AND FITTINGS AS PER PIPING AND SUPPORT MANUFACTURER'S RECOMMENDATIONS.
3. STEEL PIPES LARGER THAN 75Φ SHALL NOT BE SUPPORTED FROM THE ROOF SYSTEM UNLESS NOTED OTHERWISE.
4. PVC PIPES LARGER THAN 150Φ SHALL NOT BE SUPPORTED FROM THE ROOF SYSTEM UNLESS NOTED OTHERWISE.
5. CONTRACTOR TO CO-ORDINATE FLOW PENETRATION LOCATIONS WITH ROTARY DRUM THICKENER SUPPLIER.
6. 50Φ SCHEDULE 40 PVC SAMPLE LINE CONDUIT TO BE RUN BELOW SLAB. CONDUIT TO COME WITH LONG RADIUS 90° ELBOWS. CAULK OPENING AROUND TUBING TO ENSURE GAS TIGHT SEAL.
7. CONTRACTOR TO MOUNT ANALYZERS, FLOW METER AND LEVEL TRANSMITTER REMOTE READOUTS 1500 ABOVE FINISHED FLOOR. CONFIRM LOCATION WITH ENGINEER PRIOR TO INSTALLATION.

THIS DRAWING MAY HAVE BEEN MODIFIED FROM ITS ORIGINAL SIZE. ALL SCALE NOTATIONS INDICATED ARE BASED ON 11"x17" FORMAT DRAWINGS

ISSUE	YY-MM-DD	REVISION
2	21-01-15	FOR CONSTRUCTION
1	20-10-15	FOR TENDER

Association of Professional Engineers & Geoscientists of Saskatchewan
CERTIFICATE OF AUTHORIZATION
MPE Engineering Ltd.
Number C1334
Permission to Consult held by:

Discipline	Sk. Reg. No.	Signature
CIVIL	52866	

PROFESSIONAL ENGINEER
KAGORO
MEMBER 52866
2021-01-18
YR. MN. DAY
SASKATCHEWAN

MPE Engineering Ltd.

ENGLISH RIVER ENTERPRISES PROPERTY MANAGEMENT LP

WASTEWATER TREATMENT PLANT
PROCESS PIPING
HEADWORKS AND TREATMENT AREA
MAIN LEVEL
PLAN

DESIGNED	I.K.	JOB	7603-002-00
DRAWN	L.J.S.	SCALE	1:50
DATE	NOVEMBER 2020	DRAWING	P3.2

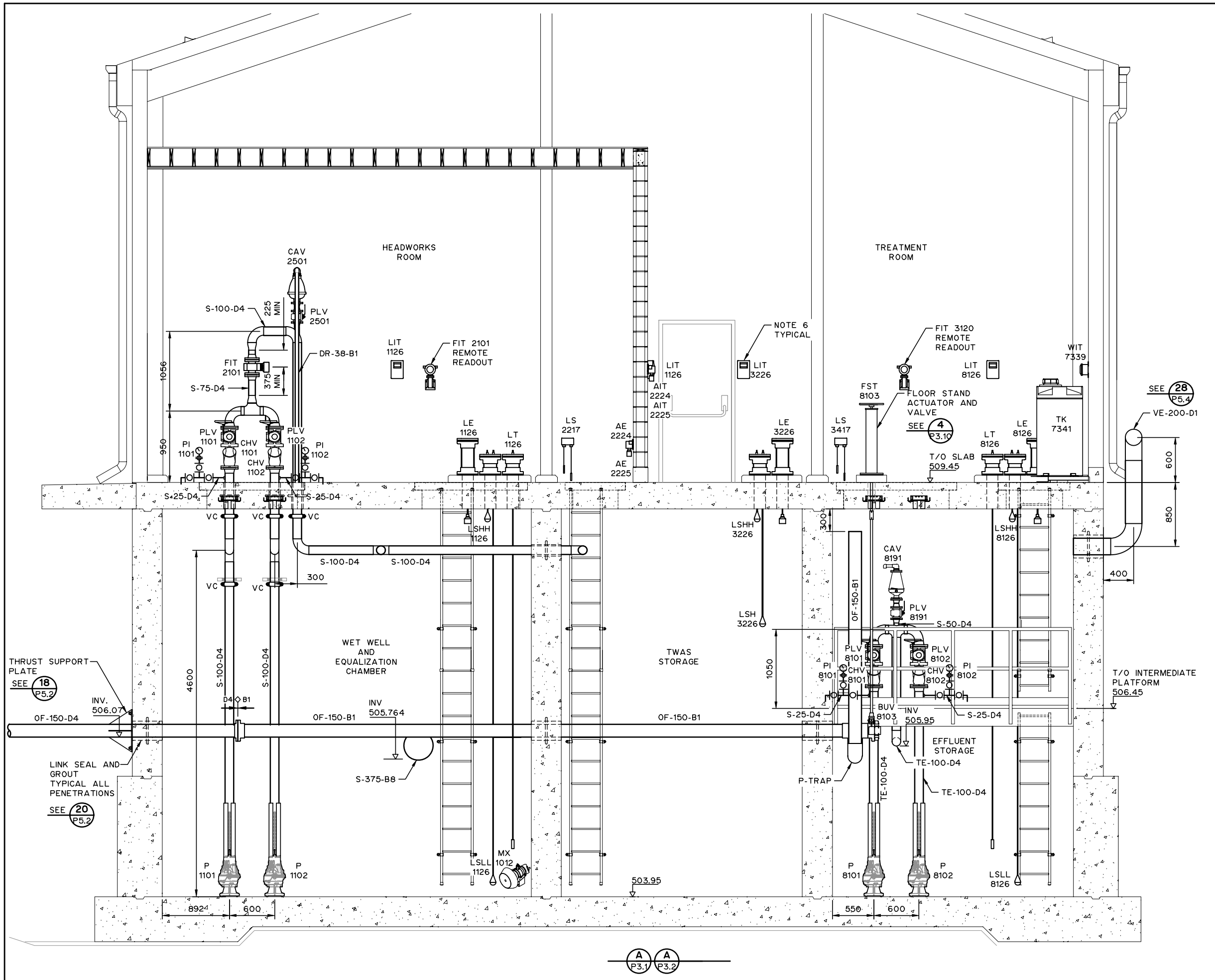

NOTES:

1. FOR INFORMATION REGARDING GENERAL NOTES, UTILITIES, ABBREVIATIONS AND SYMBOLS, REFER TO LEGEND DRAWING.
2. CONTRACTOR TO PROVIDE SUPPORT FOR PIPING AND FITTINGS AS PER PIPING AND SUPPORT MANUFACTURER'S RECOMMENDATIONS.
3. STEEL PIPES LARGER THAN 75Φ SHALL NOT BE SUPPORTED FROM THE ROOF SYSTEM UNLESS NOTED OTHERWISE.
4. PVC PIPES LARGER THAN 150Φ SHALL NOT BE SUPPORTED FROM THE ROOF SYSTEM UNLESS NOTED OTHERWISE.
5. 50Φ SCHEDULE 40 PVC CONDUIT CAST IN SLAB FOR PLANT INFLUENT SAMPLE TUBING. CONDUIT TO COME WITH LONG RADIUS 90° ELBOWS. CAULK OPENING AROUND TUBING TO ENSURE GAS TIGHT SEAL.
6. CONTRACTOR TO MOUNT ANALYZERS, FLOW METER AND LEVEL TRANSMITTER REMOTE READOUTS 1500 ABOVE FINISHED FLOOR. CONFIRM LOCATION WITH ENGINEER PRIOR TO INSTALLATION.

THIS DRAWING MAY HAVE BEEN MODIFIED FROM ITS ORIGINAL SIZE. ALL SCALE NOTATIONS INDICATED ARE BASED ON 11"x17" FORMAT DRAWINGS

ISSUE	YY-MM-DD	REVISION
2	21-01-15	FOR CONSTRUCTION
1	20-10-15	FOR TENDER

Association of Professional Engineers & Geoscientists of Saskatchewan
CERTIFICATE OF AUTHORIZATION
MPE Engineering Ltd.
Number C1334
Permission to Consult held by:

Discipline	SK. Reg. No.	Signature
CIVIL	52866	

PROFESSIONAL ENGINEER — KAGOBE — MEMBER 52866 — 2021-01-18 YR. MN. DAY — SASKATCHEWAN

MPE Engineering Ltd.

ENGLISH RIVER ENTERPRISES PROPERTY MANAGEMENT LP

WASTEWATER TREATMENT PLANT
PROCESS PIPING
HEADWORKS AND TREATMENT AREA
SECTIONS

DESIGNED	I.K.	JOB	7603-002-00
DRAWN	L.J.S.	SCALE	1:50
DATE	NOVEMBER 2020	DRAWING	P3.3

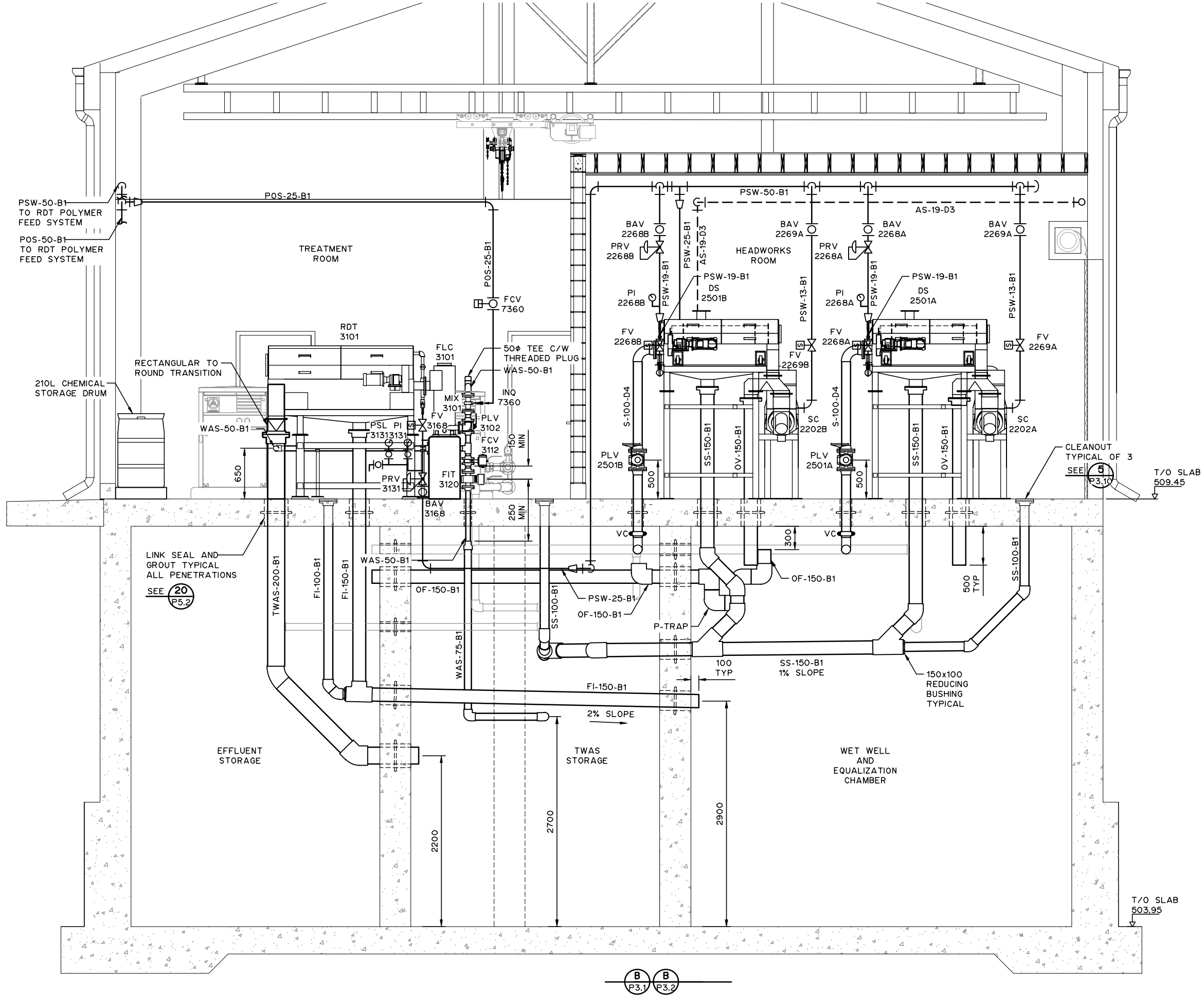

NOTES:

1. FOR INFORMATION REGARDING GENERAL NOTES, UTILITIES, ABBREVIATIONS, AND SYMBOLS, REFER TO THE LEGEND DRAWING.
2. CONTRACTOR TO PROVIDE SUPPORT FOR PIPING AND FITTINGS AS PER PIPING AND SUPPORT MANUFACTURER'S RECOMMENDATIONS.
3. STEEL PIPES LARGER THAN 75Φ SHALL NOT BE SUPPORTED FROM THE ROOF SYSTEM UNLESS NOTED OTHERWISE.
4. PVC PIPES LARGER THAN 150Φ SHALL NOT BE SUPPORTED FROM THE ROOF SYSTEM UNLESS NOTED OTHERWISE.

THIS DRAWING MAY HAVE BEEN MODIFIED FROM ITS ORIGINAL SIZE. ALL SCALE NOTATIONS INDICATED ARE BASED ON 11"x17" FORMAT DRAWINGS

ISSUE	YY-MM-DD	REVISION
2	21-01-15	FOR CONSTRUCTION
1	20-10-15	FOR TENDER

Association of Professional Engineers & Geoscientists of Saskatchewan
CERTIFICATE OF AUTHORIZATION
MPE Engineering Ltd.
Number C1334
Permission to Consult held by:

Discipline	Sk. Reg. No.	Signature
CIVIL	52866	

PROFESSIONAL ENGINEER
KAGORO
MICHAEL DAVID
2021-01-18
YR. MN. DAY
SASKATCHEWAN

MPE Engineering Ltd.

ENGLISH RIVER ENTERPRISES PROPERTY MANAGEMENT LP

WASTEWATER TREATMENT PLANT
PROCESS PIPING
HEADWORKS AND TREATMENT AREA
SECTIONS

DESIGNED	I.K.	JOB	7603-002-00
DRAWN	L.J.S.	SCALE	1:50
DATE	NOVEMBER 2020	DRAWING	P3.4

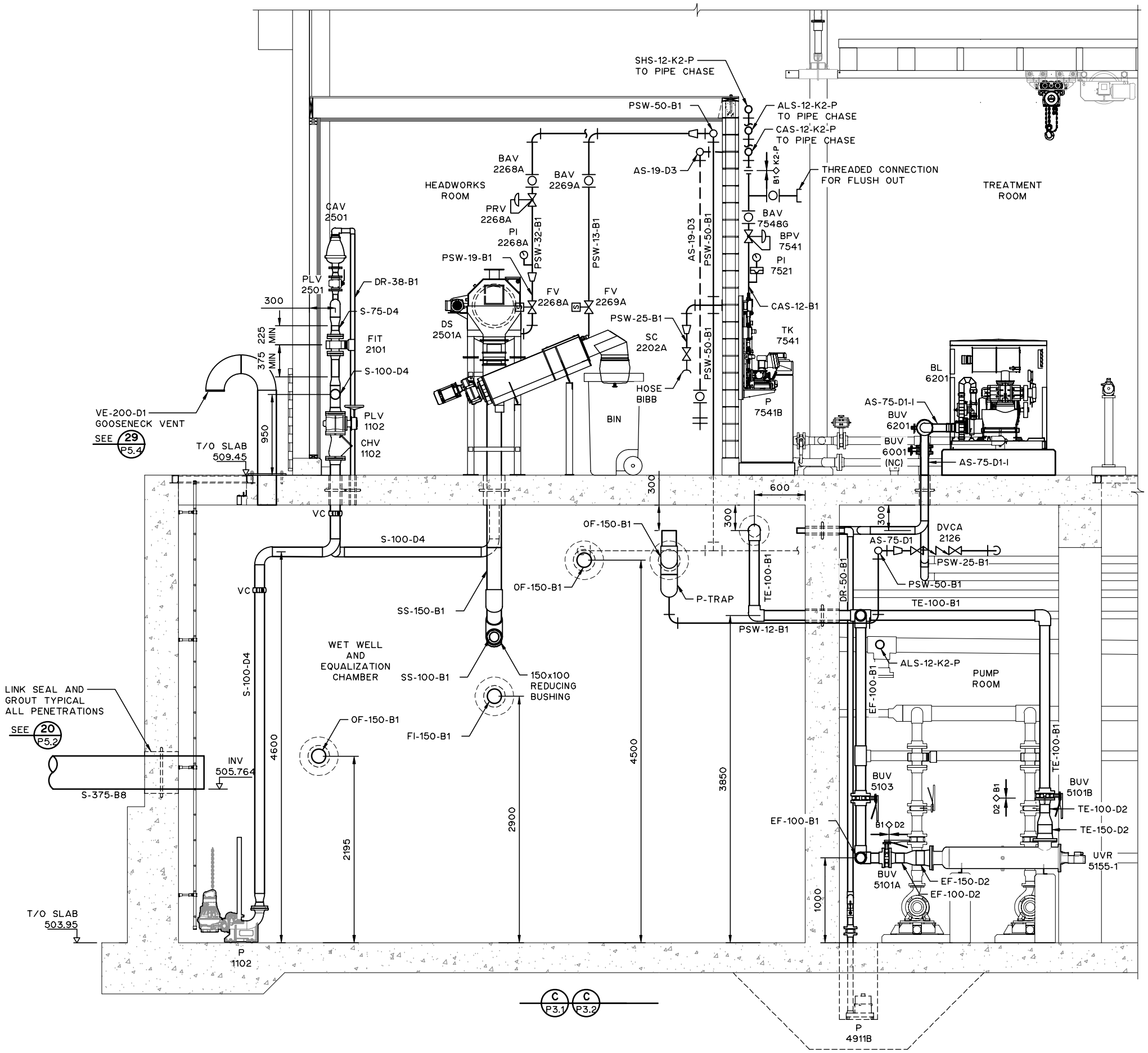

NOTES:

1. FOR INFORMATION REGARDING GENERAL NOTES, UTILITIES, ABBREVIATIONS, AND SYMBOLS, REFER TO THE LEGEND DRAWINGS.
2. CONTRACTOR TO PROVIDE SUPPORT FOR PIPING AND FITTINGS AS PER PIPING AND SUPPORT MANUFACTURER'S RECOMMENDATIONS.
3. STEEL PIPES LARGER THAN 75Φ SHALL NOT BE SUPPORTED FROM THE ROOF SYSTEM UNLESS NOTED OTHERWISE.
4. PVC PIPES LARGER THAN 150Φ SHALL NOT BE SUPPORTED FROM THE ROOF SYSTEM UNLESS NOTED OTHERWISE.
5. 50Φ SCHEDULE 40 PVC CONDUIT CAST IN SLAB FOR PLANT INFLUENT SAMPLE TUBING. CONDUIT TO COME WITH LONG RADIUS 90° ELBOWS. CAULK OPENING AROUND TUBING TO ENSURE GAS TIGHT SEAL.
6. CONTRACTOR TO MOUNT ANALYZERS, FLOW METER AND LEVEL TRANSMITTER REMOTE READOUTS 1500 ABOVE FINISHED FLOOR. CONFIRM LOCATION WITH ENGINEER PRIOR TO INSTALLATION.

THIS DRAWING MAY HAVE BEEN MODIFIED FROM ITS ORIGINAL SIZE. ALL SCALE NOTATIONS INDICATED ARE BASED ON 11"x17" FORMAT DRAWINGS

ISSUE	YY-MM-DD	REVISION
2	21-01-15	FOR CONSTRUCTION
1	20-10-15	FOR TENDER

Association of Professional Engineers & Geoscientists of Saskatchewan
CERTIFICATE OF AUTHORIZATION
MPE Engineering Ltd.
Number C1334
Permission to Consult held by:

Discipline	Sk. Reg. No.	Signature
CIVIL	52866	

PROFESSIONAL ENGINEER
KAGOBE
MEMBER 52866
2021-01-18
YR. MN. DAY
SASKATCHEWAN

MPE Engineering Ltd.

ENGLISH RIVER ENTERPRISES
PROPERTY MANAGEMENT LP

WASTEWATER TREATMENT PLANT
PROCESS PIPING
HEADWORKS AND TREATMENT AREA
SECTIONS

DESIGNED	I.K.	JOB	7603-002-00
DRAWN	L.J.S.	SCALE	1:50
DATE	NOVEMBER 2020	DRAWING	P3.5

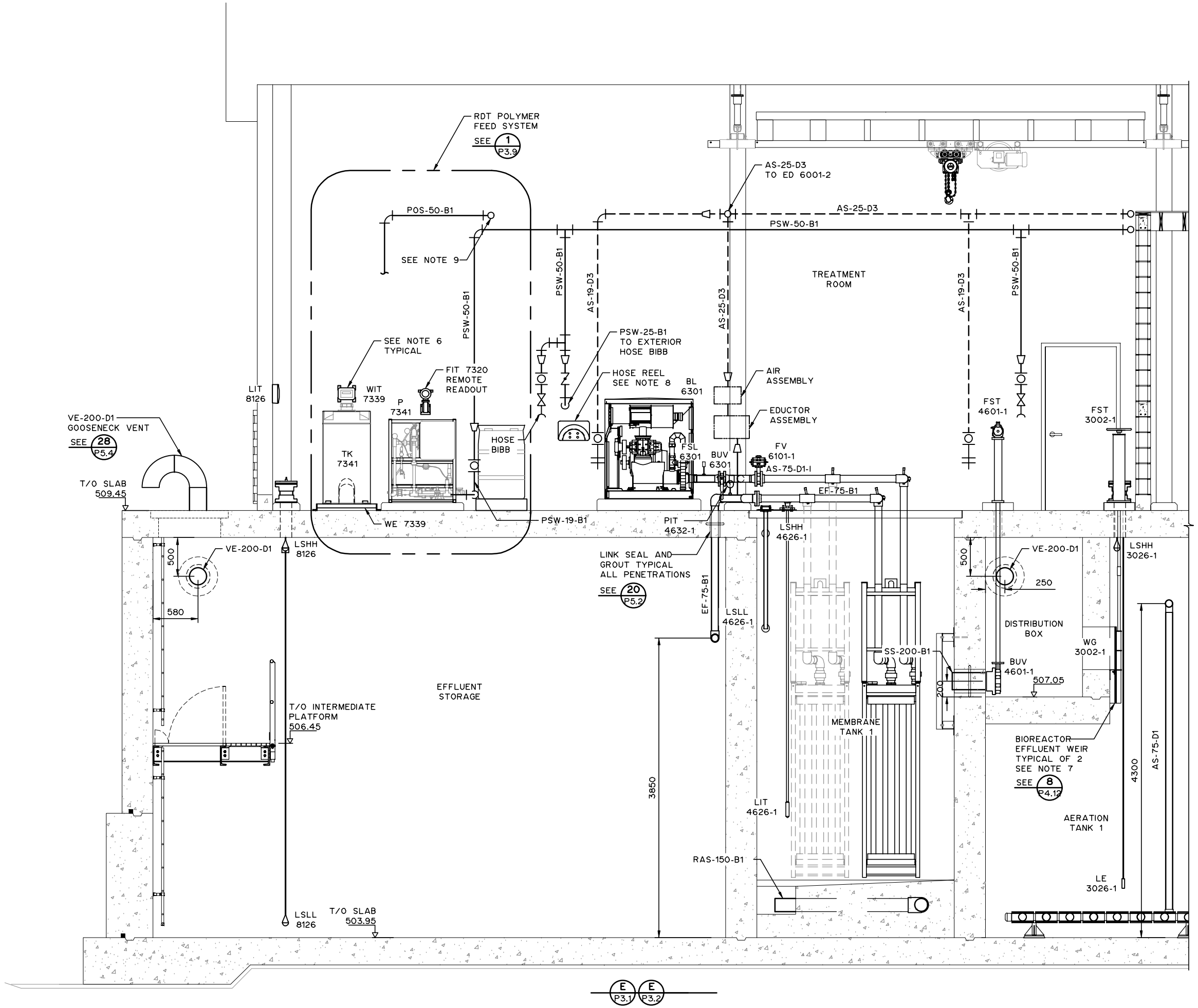

NOTES:

1. FOR INFORMATION REGARDING GENERAL NOTES, UTILITIES, ABBREVIATIONS, AND SYMBOLS, REFER TO THE LEGEND DRAWINGS.
2. CONTRACTOR TO PROVIDE SUPPORT FOR PIPING AND FITTINGS AS PER PIPING AND SUPPORT MANUFACTURER'S RECOMMENDATIONS.
3. STEEL PIPES LARGER THAN 75Φ SHALL NOT BE SUPPORTED FROM THE ROOF SYSTEM UNLESS NOTED OTHERWISE.
4. PVC PIPES LARGER THAN 150Φ SHALL NOT BE SUPPORTED FROM THE ROOF SYSTEM UNLESS NOTED OTHERWISE.
5. 50Φ SCHEDULE 40 PVC CONDUIT FOR PLANT INFLUENT SAMPLE TUBING TO BE RUN BELOW SLAB. CONDUIT TO COME WITH LONG RADIUS 90° ELBOWS. CAULK OPENING AROUND TUBING TO ENSURE GAS TIGHT SEAL.
6. CONTRACTOR TO MOUNT ANALYZERS, FLOW METER AND LEVEL TRANSMITTER REMOTE READOUTS 1500 ABOVE FINISHED FLOOR. CONFIRM LOCATION WITH ENGINEER PRIOR TO INSTALLATION.
7. CONTRACTOR TO COORDINATE SIZE OF PENETRATION WITH STRUCTURAL.
8. SEE STANDARD DETAIL IN SECTION 15015 C/W 25Φ HOSE.
9. CONTRACTOR TO NEATLY PLUMB POLYMER SOLUTION LINE TO ROTARY DRUM THICKENER INJECTION POINT.

THIS DRAWING MAY HAVE BEEN MODIFIED FROM ITS ORIGINAL SIZE. ALL SCALE NOTATIONS INDICATED ARE BASED ON 11"x17" FORMAT DRAWINGS

ISSUE	YY-MM-DD	REVISION
2	21-01-15	FOR CONSTRUCTION
1	20-10-15	FOR TENDER

Association of Professional Engineers & Geoscientists of Saskatchewan
CERTIFICATE OF AUTHORIZATION
MPE Engineering Ltd.
Number C1334
Permission to Consult held by:

Discipline	Sk. Reg. No.	Signature
CIVIL	52866	

PROFESSIONAL ENGINEER
KAGORO
MEMBER 52866
2021-01-18
YR. MN. DAY
SASKATCHEWAN

MPE Engineering Ltd.

ENGLISH RIVER ENTERPRISES PROPERTY MANAGEMENT LP

WASTEWATER TREATMENT PLANT
PROCESS PIPING
HEADWORKS AND TREATMENT AREA
SECTIONS

DESIGNED	I.K.	JOB	7603-002-00
DRAWN	L.J.S.	SCALE	1:50
DATE	NOVEMBER 2020	DRAWING	P3.6

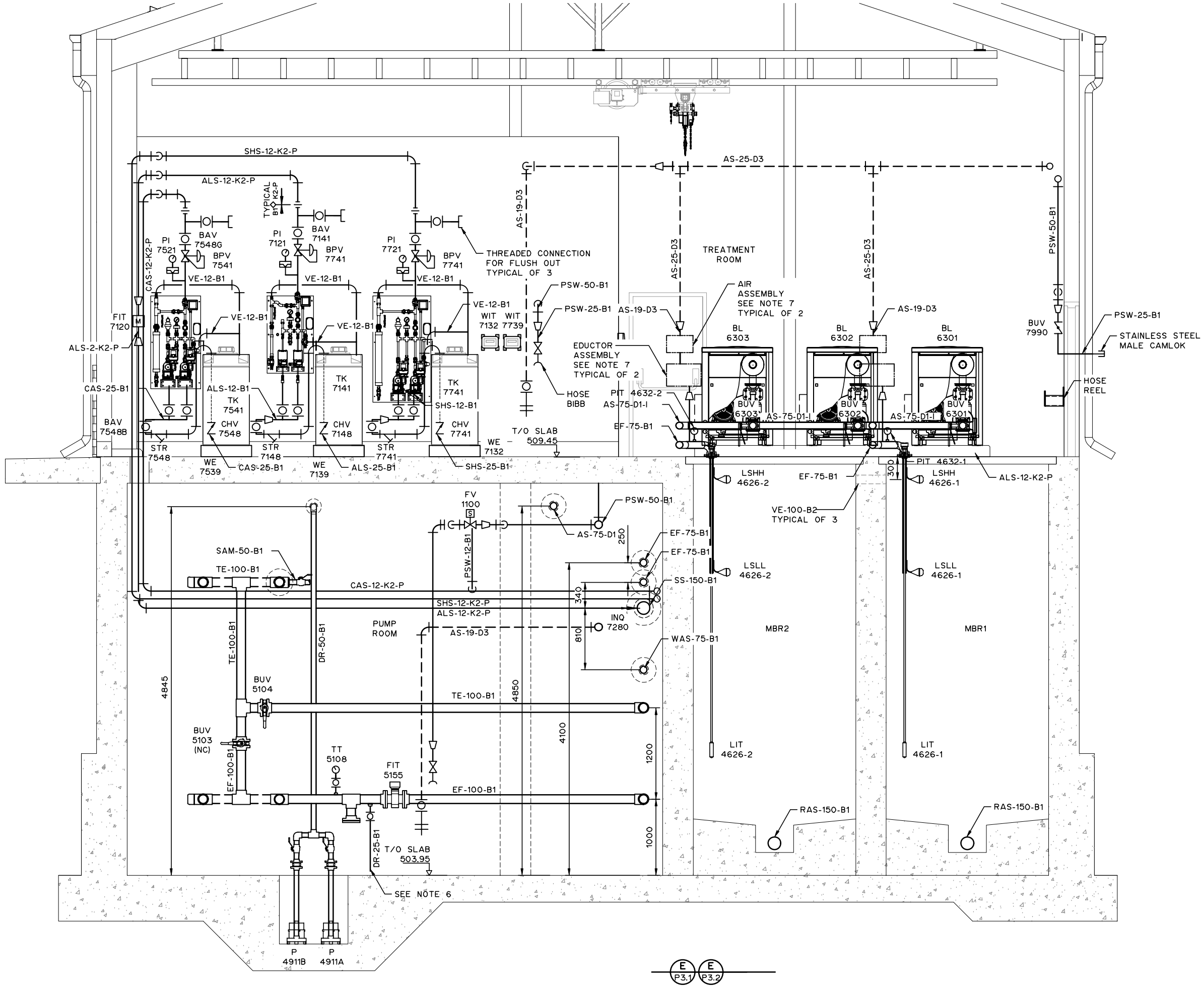

NOTES:

1. FOR INFORMATION REGARDING GENERAL NOTES, UTILITIES, ABBREVIATIONS, AND SYMBOLS, REFER TO THE LEGEND DRAWINGS.
2. CONTRACTOR TO PROVIDE SUPPORT FOR PIPING AND FITTINGS AS PER PIPING AND SUPPORT MANUFACTURER'S RECOMMENDATIONS.
3. STEEL PIPES LARGER THAN 75Φ SHALL NOT BE SUPPORTED FROM THE ROOF SYSTEM UNLESS NOTED OTHERWISE.
4. PVC PIPES LARGER THAN 150Φ SHALL NOT BE SUPPORTED FROM THE ROOF SYSTEM UNLESS NOTED OTHERWISE.
5. CONTRACTOR TO MOUNT ANALYZERS, FLOW METER AND LEVEL TRANSMITTER REMOTE READOUTS 1500 ABOVE FINISHED FLOOR. CONFIRM LOCATION WITH ENGINEER PRIOR TO INSTALLATION.
6. CONTRACTOR TO NEATLY PLUMB DRAIN LINE TO SUMP.
7. CONTRACTOR TO MOUNT AIR ASSEMBLY AND EDUCTOR ASSEMBLY OFF FINISHED FLOOR USING APPROPRIATE SUPPORTS. COORDINATE WITH ENGINEER ON EXACT LOCATION PRIOR TO INSTALLATION.

THIS DRAWING MAY HAVE BEEN MODIFIED FROM ITS ORIGINAL SIZE. ALL SCALE NOTATIONS INDICATED ARE BASED ON 11"x17" FORMAT DRAWINGS

ISSUE	YY-MM-DD	REVISION
2	21-01-15	FOR CONSTRUCTION
1	20-10-15	FOR TENDER

Association of Professional Engineers & Geoscientists of Saskatchewan
CERTIFICATE OF AUTHORIZATION
MPE Engineering Ltd.
Number C1334
Permission to Consult held by:

Discipline	Sk. Reg. No.	Signature
CIVIL	52866	

PROFESSIONAL ENGINEER KAGOBO MBALEKELWA SASKATCHEWAN
2021-01-18 YR. MN. DAY

MPE Engineering Ltd.

ENGLISH RIVER ENTERPRISES PROPERTY MANAGEMENT LP

WASTEWATER TREATMENT PLANT
PROCESS PIPING
HEADWORKS AND TREATMENT AREA
SECTIONS

DESIGNED	I.K.	JOB	7603-002-00
DRAWN	L.J.S.	SCALE	1:50
DATE	NOVEMBER 2020	DRAWING	P3.7

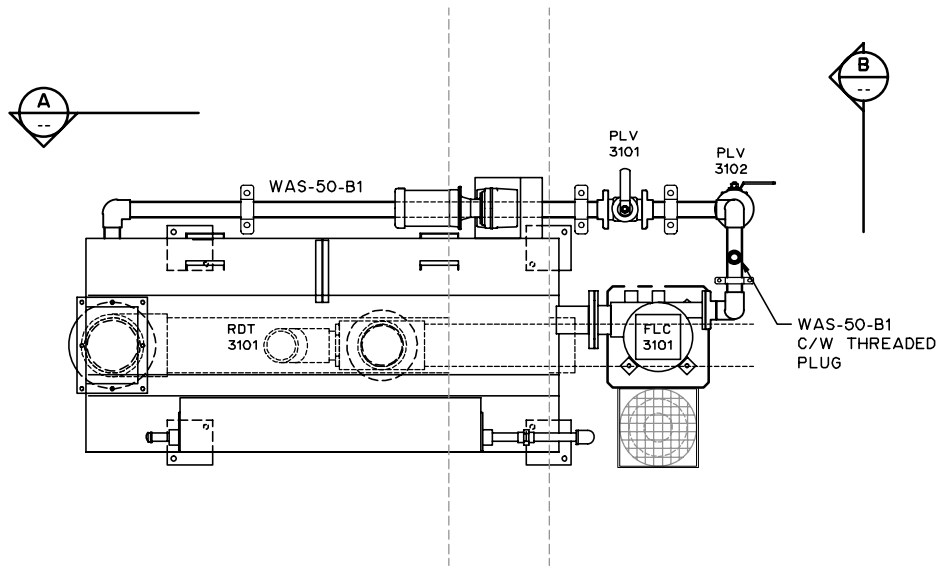

PLAN

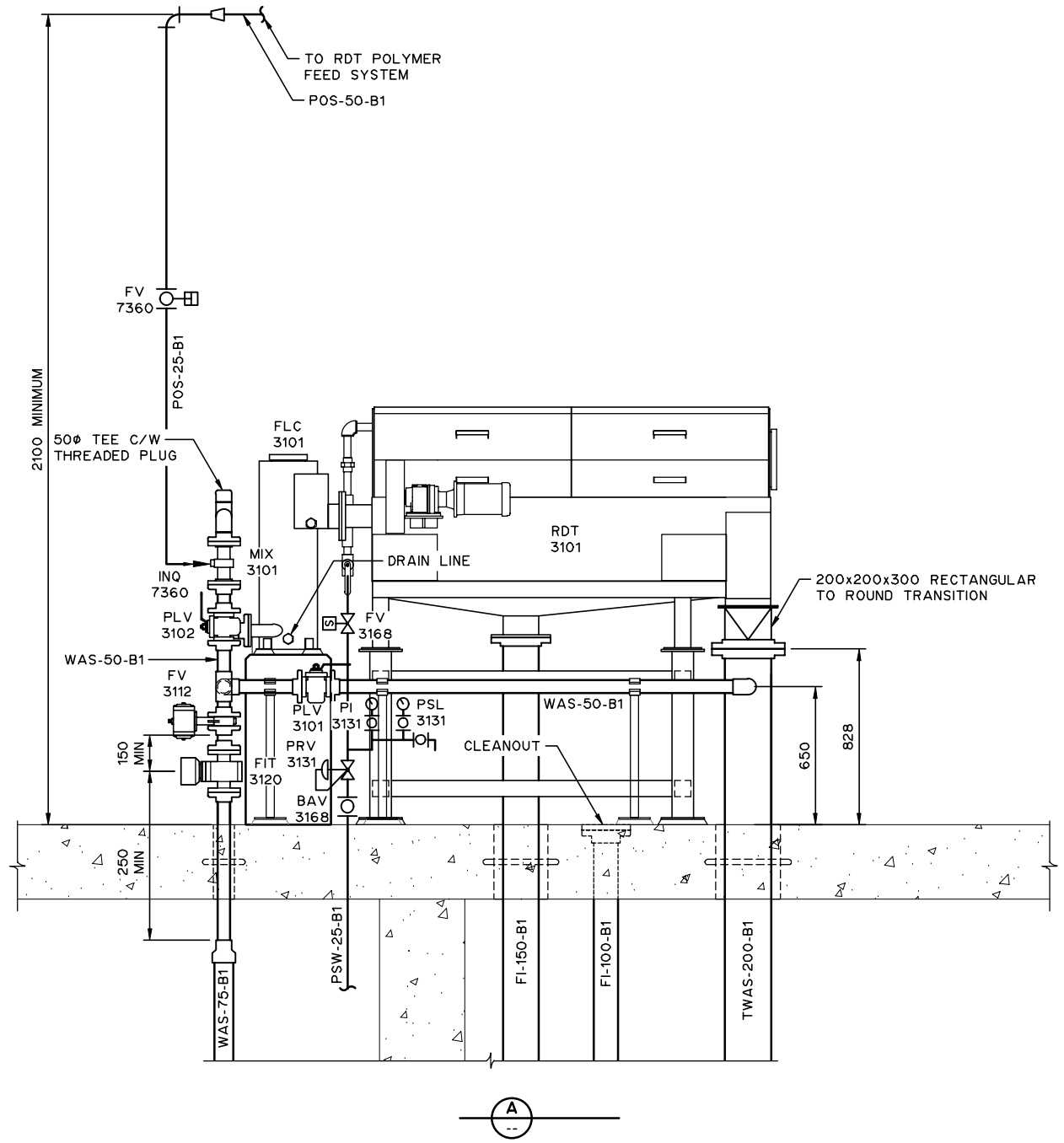

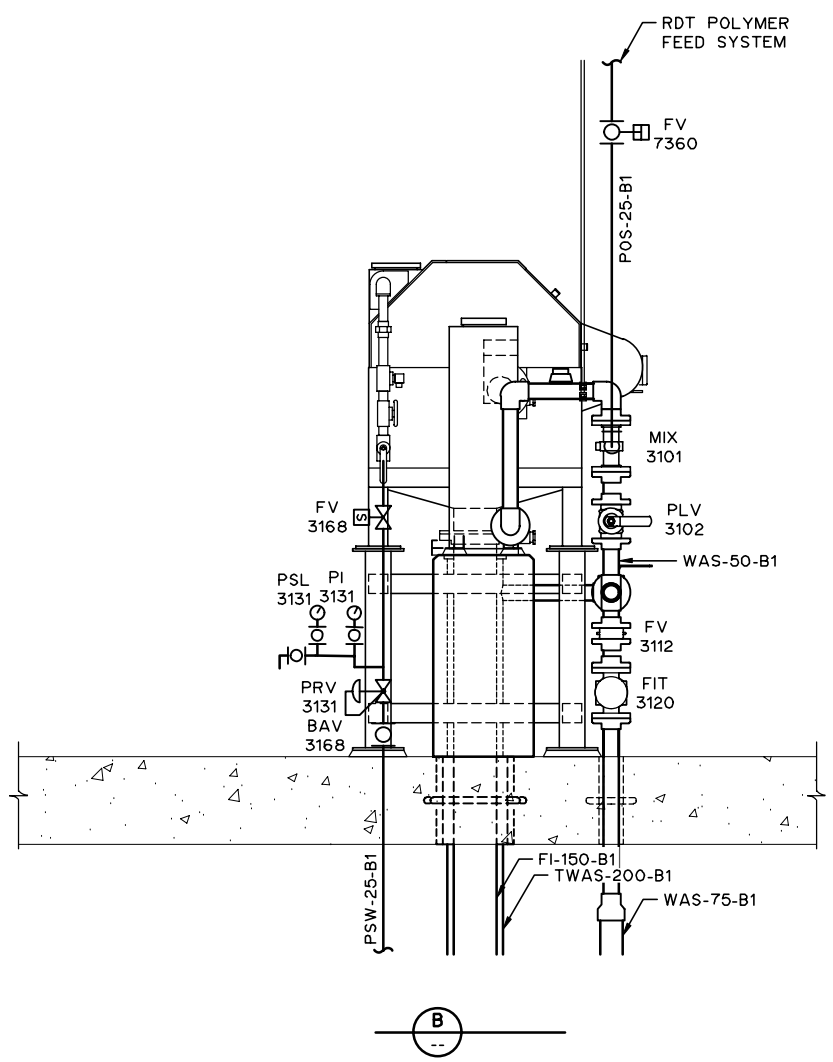

NOTES:

1. FOR INFORMATION REGARDING GENERAL NOTES, UTILITIES, ABBREVIATIONS AND SYMBOLS, REFER TO THE LEGEND DRAWINGS.
2. CONTRACTOR TO FIELD VERIFY ALL DIMENSIONS. NOTE ANY DISCREPANCIES WITH ENGINEER PRIOR TO CONSTRUCTION OR FABRICATION.
3. CONTRACTOR TO PROVIDE SUPPORT FOR PIPING AND FITTINGS AS PER MANUFACTURER'S RECOMMENDATIONS.
4. PIPING IS SHOWN SCHEMATICALLY ONLY. CONTRACTOR TO MOUNT PIPE ON RACKS AND/OR WALLS TO CARRY OUT WORK IN NEATEST POSSIBLE MANNER. CONTRACTOR TO COORDINATE WITH ENGINEER WITH RESPECT TO PIPING ROUTES PRIOR TO CARRYING OUT WORK.
5. CONTRACTOR TO CORE HOLE FOR PENETRATIONS. CONTRACTOR TO USE LINK SEAL AND GROUT AS PER CONTRACT SPECIFICATIONS.

THIS DRAWING MAY HAVE BEEN MODIFIED FROM ITS ORIGINAL SIZE. ALL SCALE NOTATIONS INDICATED ARE BASED ON 11"x17" FORMAT DRAWINGS

ISSUE	YY-MM-DD	REVISION
2	21-01-15	FOR CONSTRUCTION
1	20-10-15	FOR TENDER

Association of Professional Engineers & Geoscientists of Saskatchewan
CERTIFICATE OF AUTHORIZATION
MPE Engineering Ltd.
Number C1334
Permission to Consult held by:

Discipline	Sk. Reg. No.	Signature
CIVIL	52866	

PROFESSIONAL ENGINEER
KASOBO
MEMBER 52866
2021-01-18
YR. MN. DAY
SASKATCHEWAN

MPE Engineering Ltd.

ENGLISH RIVER ENTERPRISES
PROPERTY MANAGEMENT LP

WASTEWATER TREATMENT PLANT
PROCESS PIPING
HEADWORKS AND TREATMENT AREAS
ROTARY DRUM THICKENER
PLAN AND SECTIONS

DESIGNED	I.K.	JOB	7603-002-00
DRAWN	C.A.Z.	SCALE	1:30
DATE	NOVEMBER 2020	DRAWING	P3.8

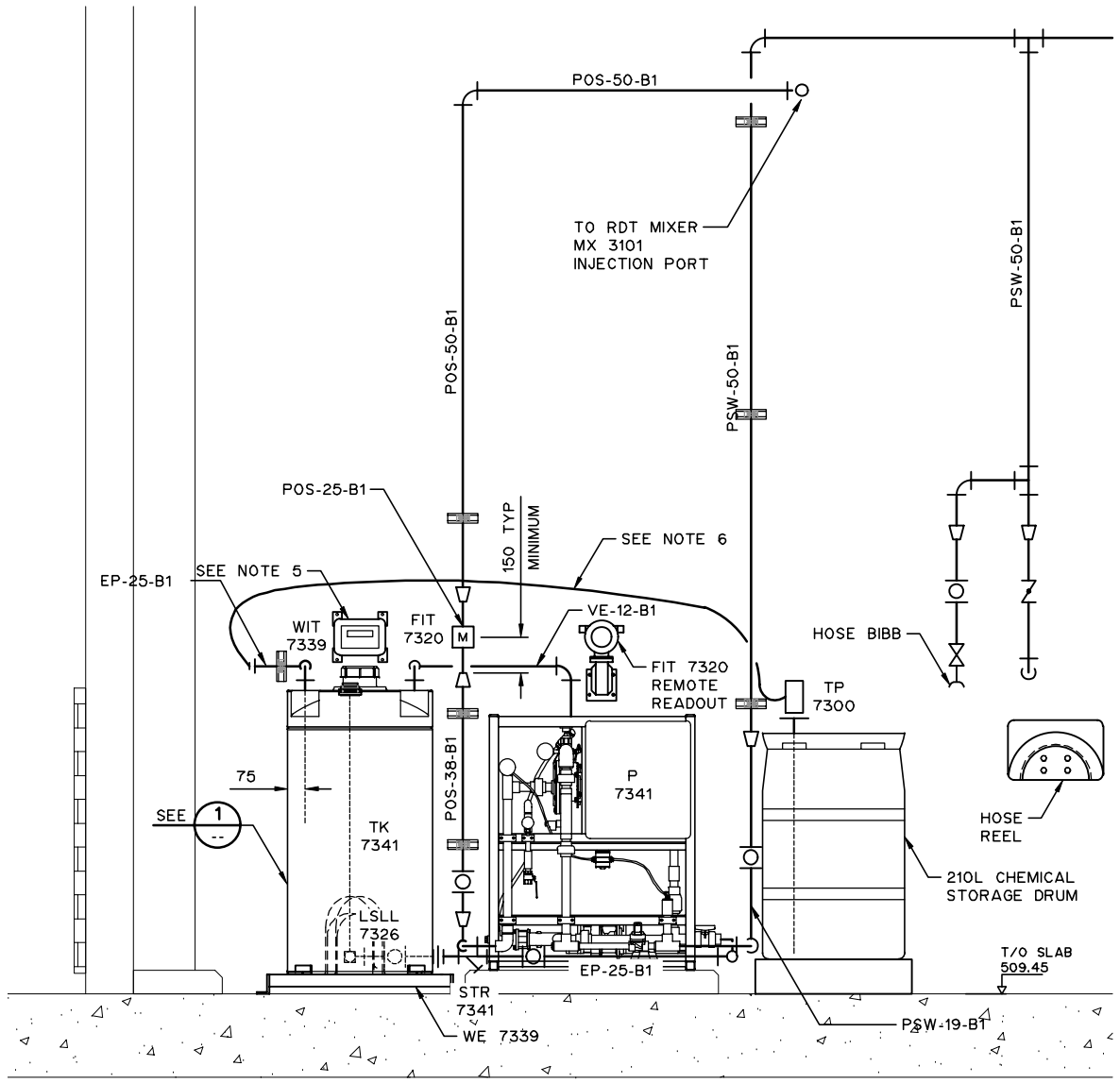

RDT POLYMER FEED SYSTEM

1 / P3.6 NTS

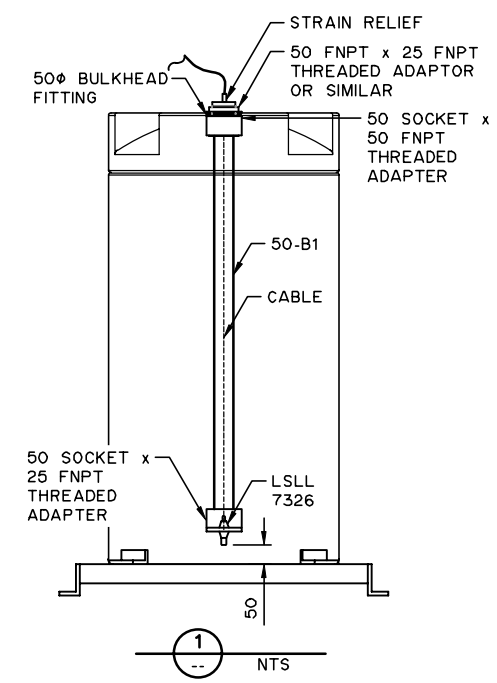

1 / -- NTS

NOTES:

1. FOR INFORMATION REGARDING GENERAL NOTES, UTILITIES, ABBREVIATIONS AND SYMBOLS, REFER TO THE LEGEND DRAWINGS.
2. CONTRACTOR TO FIELD VERIFY ALL DIMENSIONS. NOTE ANY DISCREPANCIES WITH ENGINEER PRIOR TO CONSTRUCTION OR FABRICATION.
3. CONTRACTOR TO PROVIDE SUPPORT FOR PIPING AND FITTINGS AS PER MANUFACTURER'S RECOMMENDATIONS.
4. PIPING IS SHOWN SCHEMATICALLY ONLY. CONTRACTOR TO MOUNT PIPE ON RACKS AND/OR WALLS TO CARRY OUT WORK IN NEATEST POSSIBLE MANNER. CONTRACTOR TO COORDINATE WITH ENGINEER WITH RESPECT TO PIPING ROUTES PRIOR TO CARRYING OUT WORK.
5. CONTRACTOR TO MOUNT ALL SCALE REMOTE READOUTS 1500 ABOVE FINISHED FLOOR. CONFIRM LOCATIONS WITH ENGINEER PRIOR TO INSTALLATION.
6. CONTRACTOR TO PROVIDE SUFFICIENT LENGTH OF 19Φ PVC TUBING TO ALLOW OPERATOR TO PUMP FROM ALL DRUMS EASILY.
7. CONTRACTOR TO CORE HOLE FOR PENETRATIONS. CONTRACTOR TO USE LINK SEAL AND GROUT AS PER CONTRACT SPECIFICATIONS.

THIS DRAWING MAY HAVE BEEN MODIFIED FROM ITS ORIGINAL SIZE. ALL SCALE NOTATIONS INDICATED ARE BASED ON 11"x17" FORMAT DRAWINGS

ISSUE	YY-MM-DD	REVISION
2	21-01-15	FOR CONSTRUCTION
1	20-10-15	FOR TENDER

Association of Professional Engineers & Geoscientists of Saskatchewan
CERTIFICATE OF AUTHORIZATION
MPE Engineering Ltd.
Number C1334
Permission to Consult held by:

Discipline	Sk. Reg. No.	Signature
CIVIL	52866	

PROFESSIONAL ENGINEER
I. KAGOBO
MEMBER 52866
2021-01-18
YR. MN. DAY
SASKATCHEWAN

MPE Engineering Ltd.

ENGLISH RIVER ENTERPRISES
PROPERTY MANAGEMENT LP

WASTEWATER TREATMENT PLANT
PROCESS PIPING
HEADWORKS AND TREATMENT AREAS
POLYMER FEED SYSTEM DETAILS

DESIGNED	I.K.	JOB	7603-002-00
DRAWN	C.A.Z.	SCALE	SHOWN
DATE	NOVEMBER 2020	DRAWING	P3.9

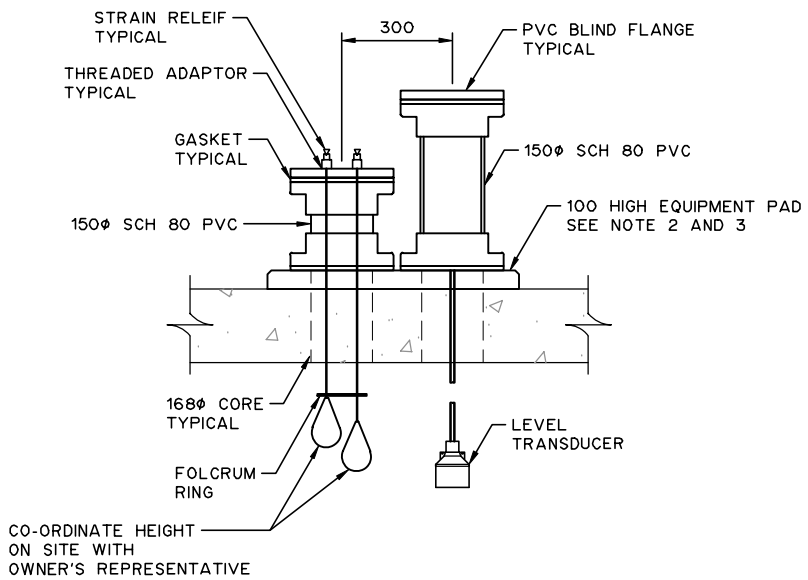

MULTIPLE INSTRUMENT HANGER

2 / P3.2 NTS

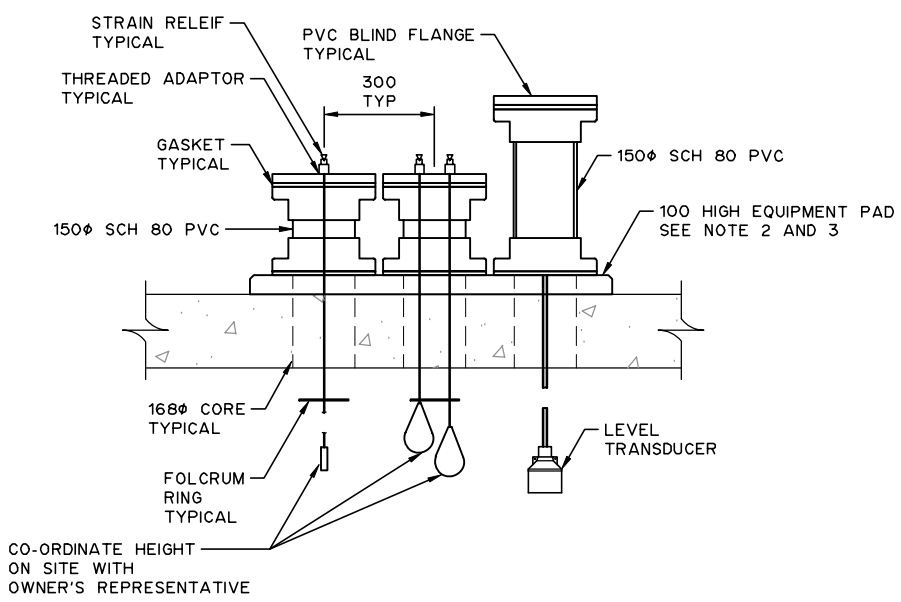

MULTIPLE INSTRUMENT HANGER

3 / P3.2 NTS

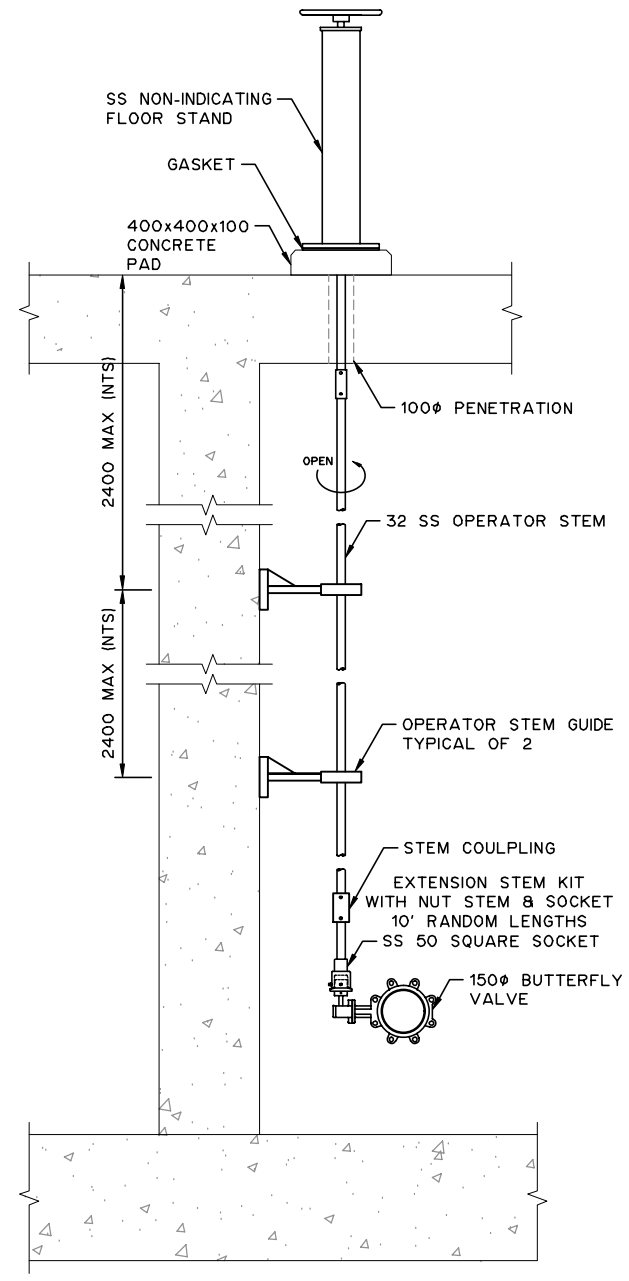

SUBMERGED VALVE WITH FLOOR STAND OPERATOR

4 / P3.2 4 / P3.3 NTS

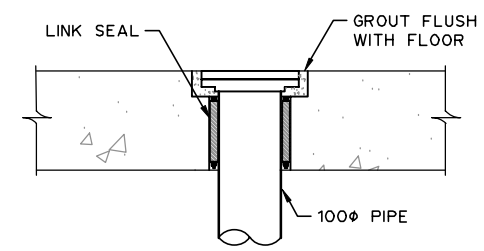

TYPICAL PROCESS CLEANOUT

5 / P3.2 NTS

NOTES:

1. FOR INFORMATION REGARDING GENERAL NOTES, UTILITIES, ABBREVIATIONS AND SYMBOLS, REFER TO THE LEGEND DRAWINGS.
2. 20 CHAMFER ALL EXPOSED CONCRETE EDGES TYPICAL.
3. HOUSEKEEPING PADS TO EXTEND 100 BEYOND EQUIPMENT. COORDINATE WITH SUPPLIER.

THIS DRAWING MAY HAVE BEEN MODIFIED FROM ITS ORIGINAL SIZE. ALL SCALE NOTATIONS INDICATED ARE BASED ON 11"x17" FORMAT DRAWINGS

ISSUE	YY-MM-DD	REVISION
2	21-01-15	FOR CONSTRUCTION
1	20-10-15	FOR TENDER

Association of Professional Engineers & Geoscientists of Saskatchewan
CERTIFICATE OF AUTHORIZATION
MPE Engineering Ltd.
Number C1334
Permission to Consult held by:

Discipline	Sk. Reg. No.	Signature
CIVIL	52866	

PROFESSIONAL ENGINEER
KAGORO
MEMBER 52866
2021-01-18
YR. MN. DAY
SASKATCHEWAN

MPE Engineering Ltd.

ENGLISH RIVER ENTERPRISES PROPERTY MANAGEMENT LP

WASTEWATER TREATMENT PLANT
PROCESS PIPING
HEADWORKS AND TREATMENT AREAS
DETAILS

DESIGNED	I.K.	JOB	7603-002-00
DRAWN	C.A.Z.	SCALE	SHOWN
DATE	NOVEMBER 2020	DRAWING	P3.10

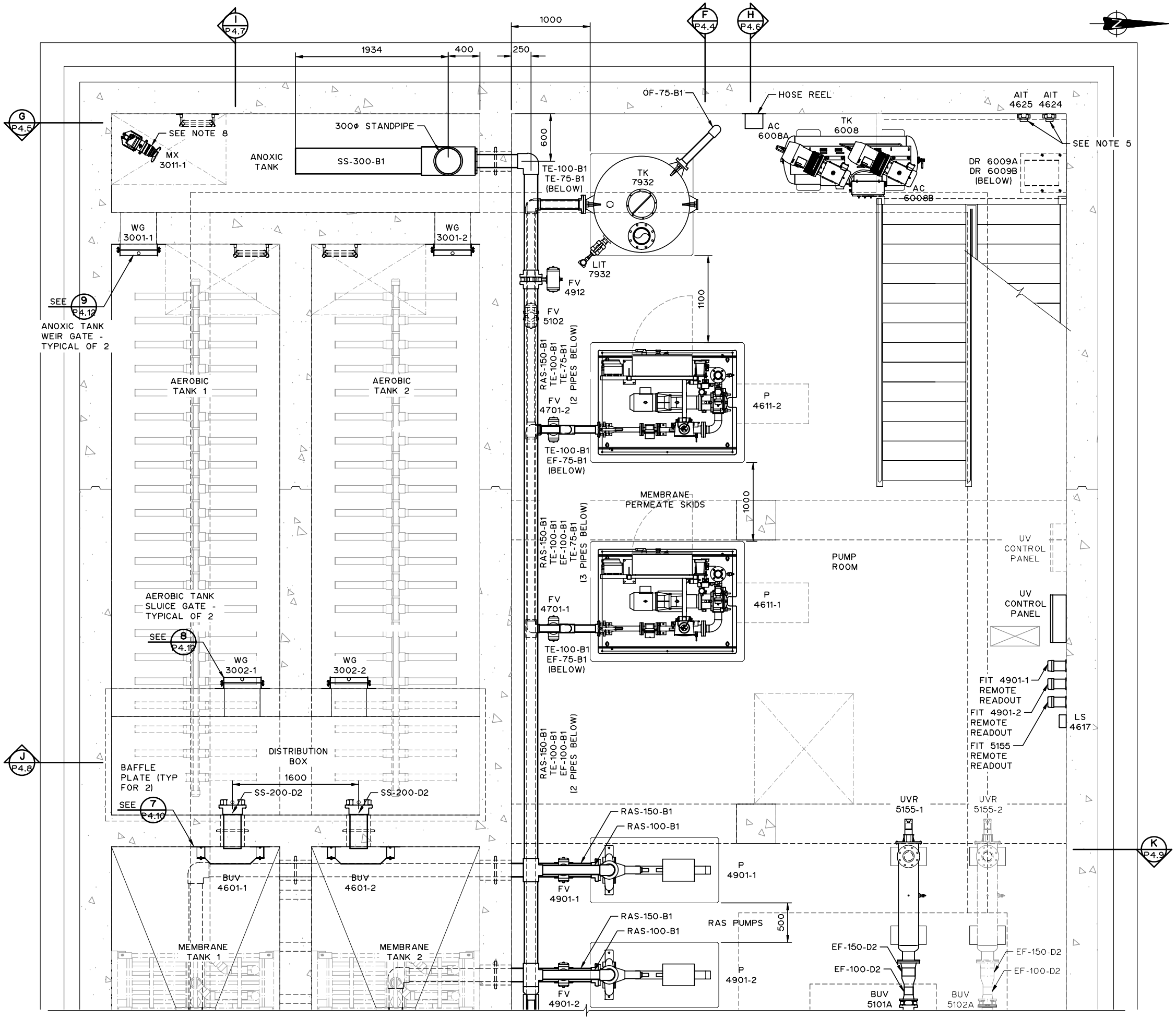

NOTES:

1. FOR INFORMATION REGARDING GENERAL NOTES, UTILITIES, ABBREVIATIONS AND SYMBOLS, REFER TO THE LEGEND DRAWINGS.
2. CONTRACTOR TO PROVIDE SUPPORT FOR PIPING AND FITTINGS AS PER PIPING AND SUPPORT MANUFACTURER'S RECOMMENDATIONS.
3. STEEL PIPES LARGER THAN 75Φ SHALL NOT BE SUPPORTED FROM THE ROOF SYSTEM UNLESS NOTED OTHERWISE.
4. PVC PIPES LARGER THAN 150Φ SHALL NOT BE SUPPORTED FROM THE ROOF SYSTEM UNLESS NOTED OTHERWISE.
5. AIT 4625 AND AIT 4624 BEACONS AND HORNS ARE TO BE INSTALLED IN THE STAIRWELL LANDING SO AS TO BE VISIBLE TO ANY PERSON(S) AT THE TOP OF THE STAIRS.
6. ALL PIPE SUPPORTS AND PIPE HANGERS TO BE 316 SS.
7. STAINLESS STEEL ISOLATION BALL VALVES REQUIRED AT ALL PNEUMATIC FIELD DEVICES AND SKID CONNECTIONS.
8. CONTRACTOR TO PROVIDE TUBING GUIDE AND CABLE SUPPORT FOR MIXER.

THIS DRAWING MAY HAVE BEEN MODIFIED FROM ITS ORIGINAL SIZE. ALL SCALE NOTATIONS INDICATED ARE BASED ON 11"x17" FORMAT DRAWINGS

ISSUE	YY-MM-DD	REVISION
2	21-01-15	FOR CONSTRUCTION
1	20-10-15	FOR TENDER

Association of Professional Engineers & Geoscientists of Saskatchewan
CERTIFICATE OF AUTHORIZATION
MPE Engineering Ltd.
Number C1334
Permission to Consult held by:

Discipline	Sk. Reg. No.	Signature
CIVIL	52866	

PROFESSIONAL ENGINEER
I. KAGOBE
MEMBER 52866
2021-01-18
YR. MN. DAY
SASKATCHEWAN

MPE Engineering Ltd.

ENGLISH RIVER ENTERPRISES PROPERTY MANAGEMENT LP

WASTEWATER TREATMENT PLANT
PROCESS PIPING
BIOREACTOR AND PUMP ROOM
LOWER LEVEL PLAN
LOWER PIPING

DESIGNED	I.K.	JOB	7603-002-00
DRAWN	L.J.S.	SCALE	1:50
DATE	NOVEMBER 2020	DRAWING	P4.1

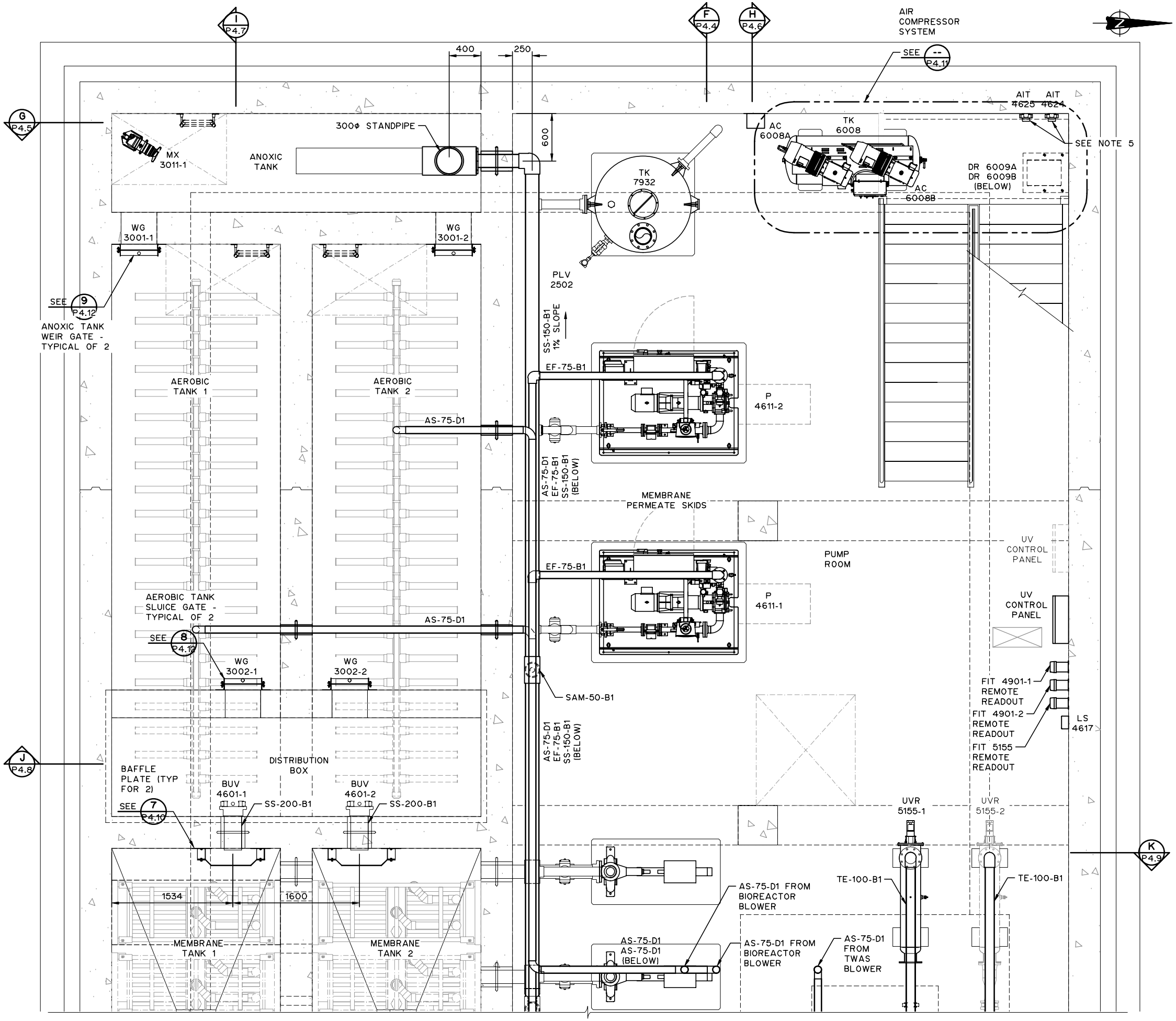

NOTES:

1. FOR INFORMATION REGARDING GENERAL NOTES, UTILITIES, ABBREVIATIONS AND SYMBOLS, REFER TO THE LEGEND DRAWINGS.
2. CONTRACTOR TO PROVIDE SUPPORT FOR PIPING AND FITTINGS AS PER PIPING AND SUPPORT MANUFACTURER'S RECOMMENDATIONS.
3. STEEL PIPES LARGER THAN 75Φ SHALL NOT BE SUPPORTED FROM THE ROOF SYSTEM UNLESS NOTED OTHERWISE.
4. PVC PIPES LARGER THAN 150Φ SHALL NOT BE SUPPORTED FROM THE ROOF SYSTEM UNLESS NOTED OTHERWISE.
5. AIT 4625 AND AIT 4624 BEACONS AND HORNS ARE TO BE INSTALLED IN THE STAIRWELL LANDING SO AS TO BE VISIBLE TO ANY PERSON(S) AT THE TOP OF THE STAIRS.
6. ALL PIPE SUPPORTS AND PIPE HANGERS TO BE 316 SS.
7. STAINLESS STEEL ISOLATION BALL VALVES REQUIRED AT ALL PNEUMATIC FIELD DEVICES AND SKID CONNECTIONS.
8. ALL BOLTS, RODS, NUTS AND WASHERS TO BE 316 SS IN AEROBIC TANKS.

THIS DRAWING MAY HAVE BEEN MODIFIED FROM ITS ORIGINAL SIZE. ALL SCALE NOTATIONS INDICATED ARE BASED ON 11"x17" FORMAT DRAWINGS

ISSUE	YY-MM-DD	REVISION
2	21-01-15	FOR CONSTRUCTION
1	20-10-15	FOR TENDER

Association of Professional Engineers & Geoscientists of Saskatchewan
CERTIFICATE OF AUTHORIZATION
MPE Engineering Ltd.
Number C1334
Permission to Consult held by:

Discipline	Sk. Reg. No.	Signature
CIVIL	52866	

PROFESSIONAL ENGINEER
KAGORO
MEMBER 52866
2021-01-18
YR. MN. DAY
SASKATCHEWAN

MPE Engineering Ltd.

ENGLISH RIVER ENTERPRISES PROPERTY MANAGEMENT LP

WASTEWATER TREATMENT PLANT
PROCESS PIPING
BIOREACTOR AND PUMP ROOM
LOWER LEVEL PLAN
UPPER PIPING

DESIGNED	I.K.	JOB	7603-002-00
DRAWN	L.J.S.	SCALE	1:50
DATE	NOVEMBER 2020	DRAWING	P4.2

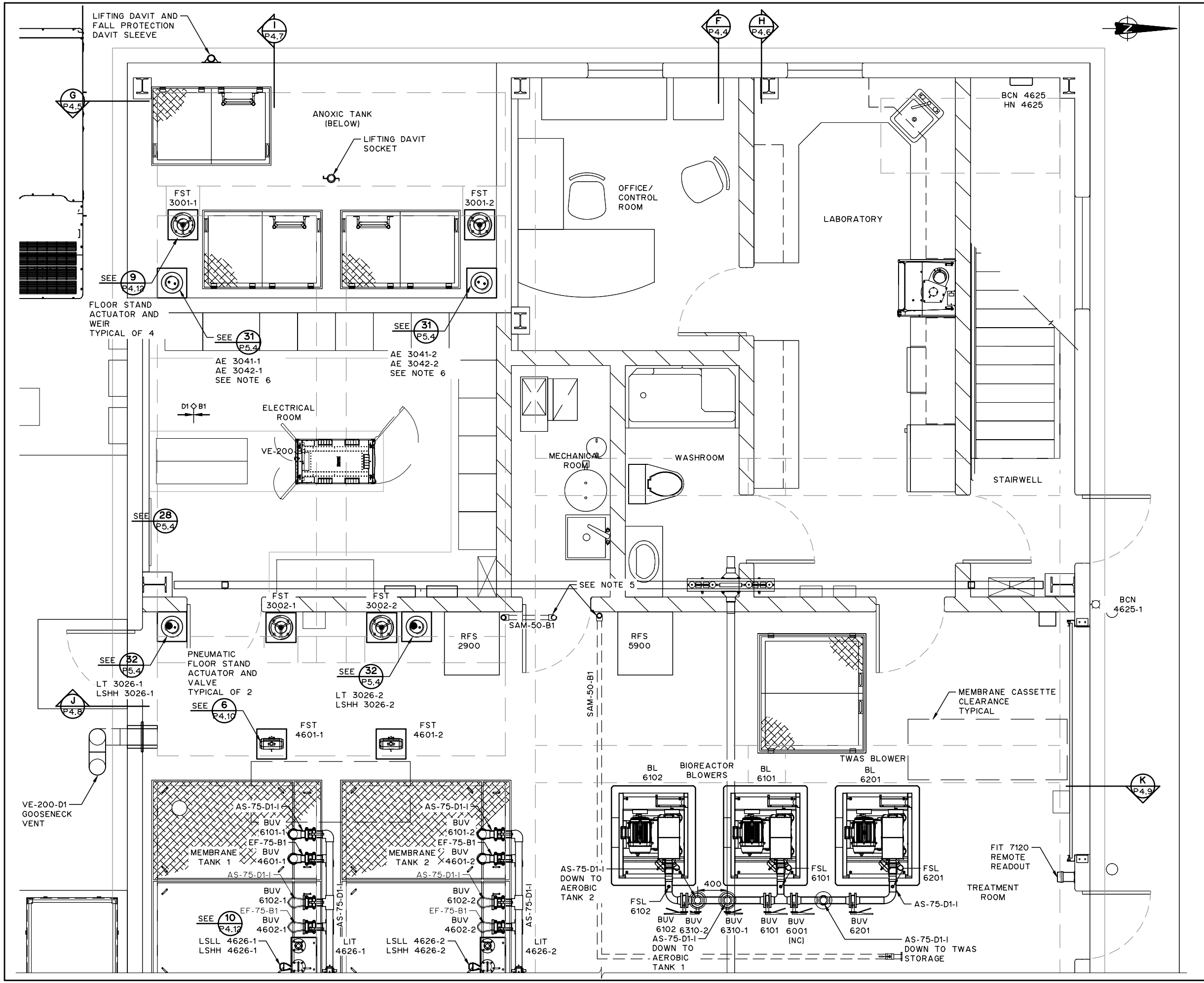

NOTES:

1. FOR INFORMATION REGARDING GENERAL NOTES, UTILITIES, ABBREVIATIONS AND SYMBOLS, REFER TO THE LEGEND DRAWINGS.
2. CONTRACTOR TO PROVIDE SUPPORT FOR PIPING AND FITTINGS AS PER PIPING AND SUPPORT MANUFACTURER'S RECOMMENDATIONS.
3. STEEL PIPES LARGER THAN 75Φ SHALL NOT BE SUPPORTED FROM THE ROOF SYSTEM UNLESS NOTED OTHERWISE.
4. PVC PIPES LARGER THAN 150Φ SHALL NOT BE SUPPORTED FROM THE ROOF SYSTEM UNLESS NOTED OTHERWISE.
5. 50Φ SCHEDULE 40 PVC CONDUIT FOR PLANT INFLUENT AND EFFLUENT SAMPLE TUBINGS TO BE RUN BELOW SLAB. CONDUIT TO COME WITH LONG RADIUS 90° ELBOWS. CAULK AROUND OPENING TO ENSURE GAS TIGHT SEAL.
6. REMOTE DISPLAYS FOR DISSOLVED OXYGEN AND PH SENSORS FOR AEROBIC TANKS TO BE MOUNTED ON FRONT OF CP-2 IN THE ELECTRICAL ROOM.
7. ALL PIPE SUPPORTS AND PIPE HANGERS TO BE 316 SS.
8. ALL BOLTS, RODS, NUTS, AND WASHERS TO BE 316 SS IN AEROBIC TANKS.

THIS DRAWING MAY HAVE BEEN MODIFIED FROM ITS ORIGINAL SIZE. ALL SCALE NOTATIONS INDICATED ARE BASED ON 11"x17" FORMAT DRAWINGS

ISSUE	YY-MM-DD	REVISION
2	21-01-15	FOR CONSTRUCTION
1	20-10-15	FOR TENDER

Association of Professional Engineers & Geoscientists of Saskatchewan
CERTIFICATE OF AUTHORIZATION
MPE Engineering Ltd.
Number C1334
Permission to Consult held by:

Discipline	Sk. Reg. No.	Signature
CIVIL	52866	

PROFESSIONAL ENGINEER
KAGORO
MEMBER 52866
2021-01-18
YR. MN. DAY
SASKATCHEWAN

MPE Engineering Ltd.

ENGLISH RIVER ENTERPRISES PROPERTY MANAGEMENT LP

WASTEWATER TREATMENT PLANT
PROCESS PIPING
BIOREACTOR AND PUMP ROOM
MAIN LEVEL
PLAN

DESIGNED	I.K.	JOB	7603-002-00
DRAWN	L.J.S.	SCALE	1:50
DATE	NOVEMBER 2020	DRAWING	P4.3

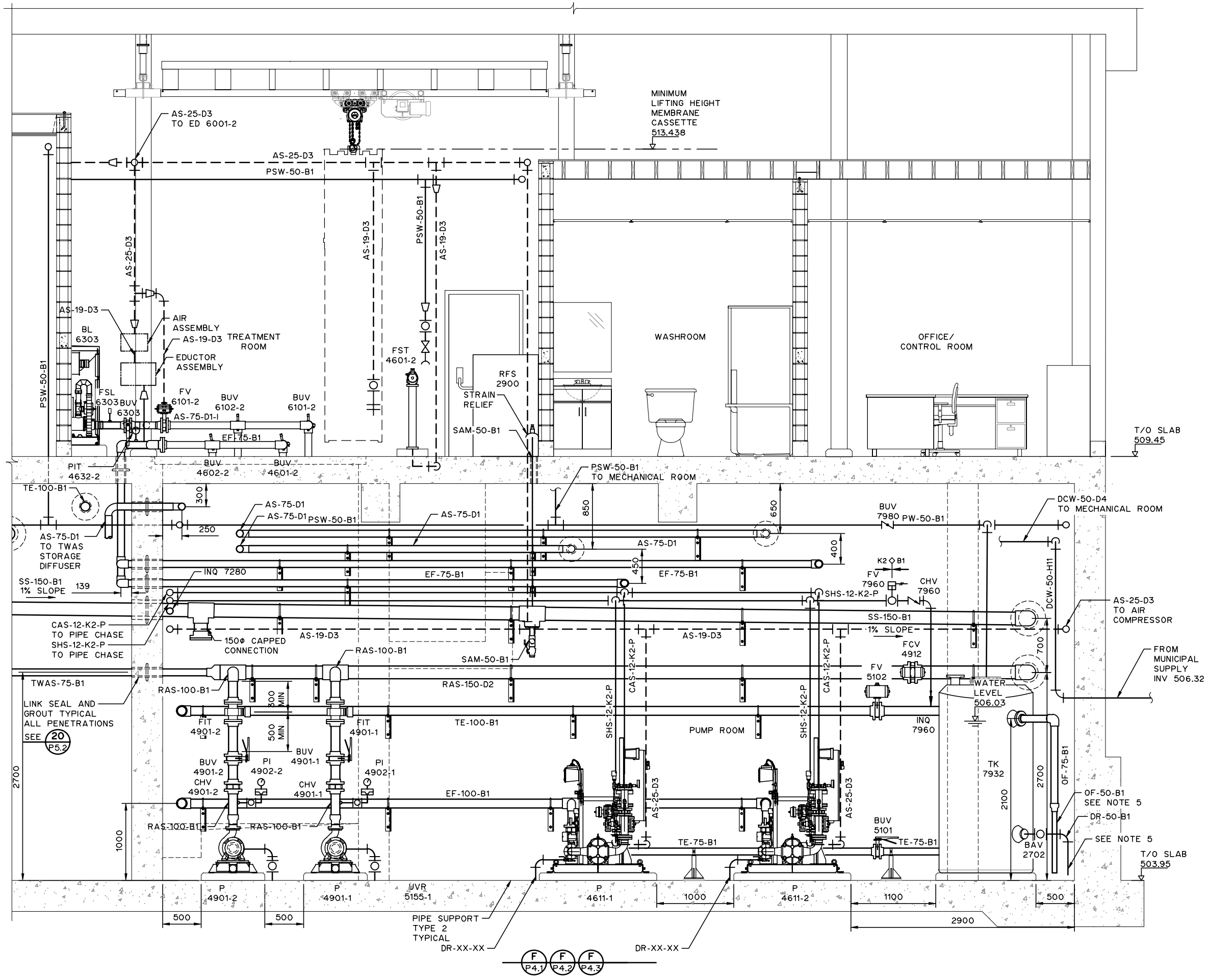

NOTES:

1. FOR INFORMATION REGARDING GENERAL NOTES, UTILITIES, ABBREVIATIONS, AND SYMBOLS, REFER TO THE LEGEND DRAWINGS.
2. CONTRACTOR TO PROVIDE SUPPORT FOR PIPING AND FITTINGS AS PER PIPING AND SUPPORT MANUFACTURER'S RECOMMENDATIONS.
3. STEEL PIPES LARGER THAN 75Φ SHALL NOT BE SUPPORTED FROM THE ROOF SYSTEM UNLESS NOTED OTHERWISE.
4. PVC PIPES LARGER THAN 150Φ SHALL NOT BE SUPPORTED FROM THE ROOF SYSTEM UNLESS NOTED OTHERWISE.
5. CONTRACTOR TO NEATLY PLUMB DRAIN LINE TO THE NEAREST FLOOR DRAIN.

THIS DRAWING MAY HAVE BEEN MODIFIED FROM ITS ORIGINAL SIZE. ALL SCALE NOTATIONS INDICATED ARE BASED ON 11"x17" FORMAT DRAWINGS

ISSUE	YY-MM-DD	REVISION
2	21-01-15	FOR CONSTRUCTION
1	20-10-15	FOR TENDER

Association of Professional Engineers & Geoscientists of Saskatchewan
CERTIFICATE OF AUTHORIZATION
MPE Engineering Ltd.
Number C1334
Permission to Consult held by:

Discipline	Sk. Reg. No.	Signature
CIVIL	52866	

PROFESSIONAL ENGINEER KAGOBO MBUGUA JEREMIAH SASKATCHEWAN 2021-01-18 YR. MN. DAY

MPE Engineering Ltd.

ENGLISH RIVER ENTERPRISES PROPERTY MANAGEMENT LP

WASTEWATER TREATMENT PLANT
PROCESS PIPING
BIOREACTOR AND PUMP ROOM
SECTIONS

DESIGNED	I.K.	JOB	7603-002-00
DRAWN	C.A.Z.	SCALE	1:50
DATE	NOVEMBER 2020	DRAWING	P4.4

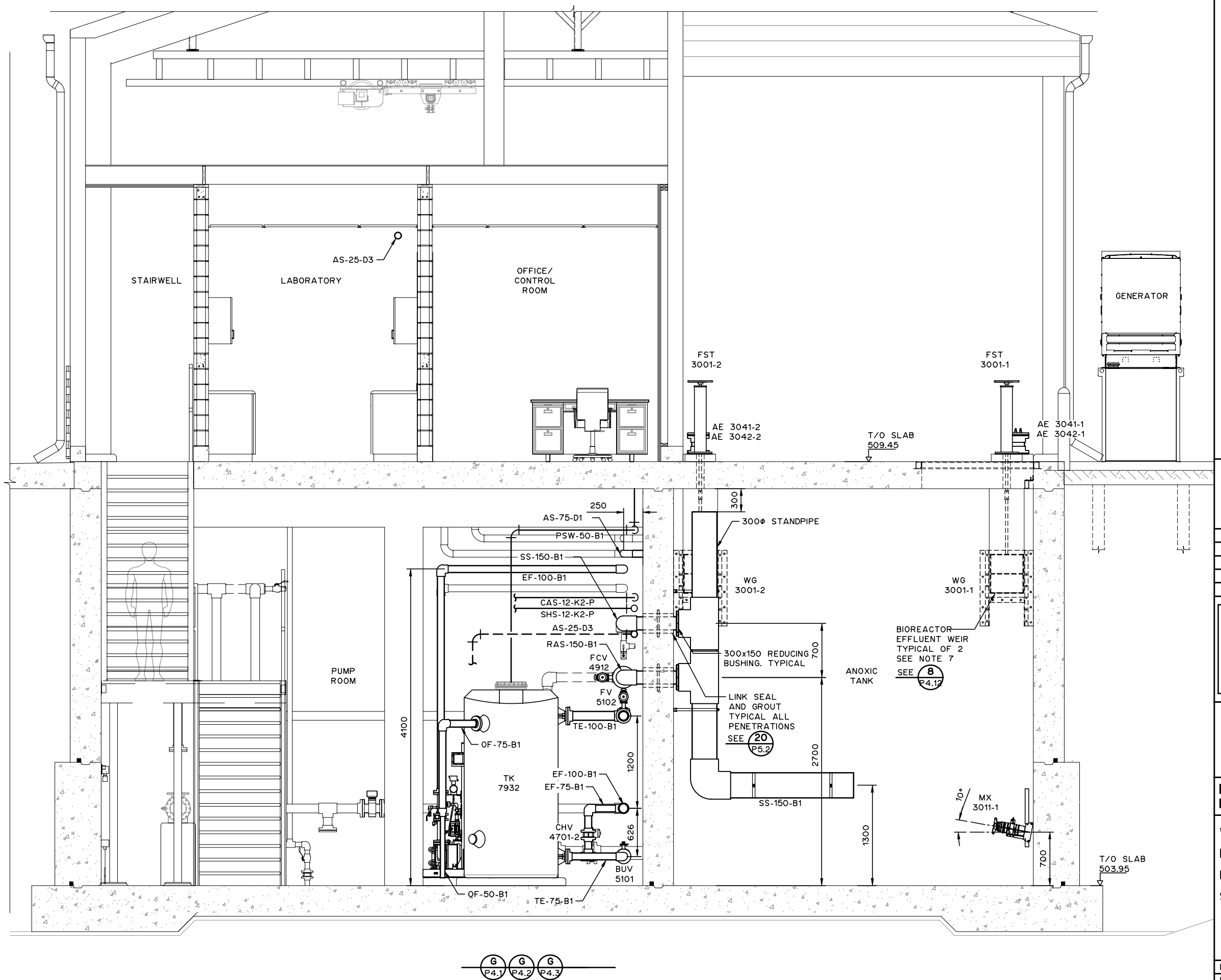

NOTES:

1. FOR INFORMATION REGARDING GENERAL NOTES, UTILITIES, ABBREVIATIONS, AND SYMBOLS, REFER TO THE LEGEND DRAWINGS.
2. CONTRACTOR TO PROVIDE SUPPORT FOR PIPING AND FITTINGS AS PER PIPING AND SUPPORT MANUFACTURER'S RECOMMENDATIONS.
3. STEEL PIPES LARGER THAN 75Φ SHALL NOT BE SUPPORTED FROM THE ROOF SYSTEM UNLESS NOTED OTHERWISE.
4. PVC PIPES LARGER THAN 150Φ SHALL NOT BE SUPPORTED FROM THE ROOF SYSTEM UNLESS NOTED OTHERWISE.
5. CONTRACTOR TO NEATLY PLUMB DRAIN LINE TO THE NEAREST FLOOR DRAIN.

THIS DRAWING MAY HAVE BEEN MODIFIED FROM ITS ORIGINAL SIZE. ALL SCALE NOTATIONS INDICATED ARE BASED ON 11"x17" FORMAT DRAWINGS

ISSUE	YY-MM-DD	REVISION
2	21-01-15	FOR CONSTRUCTION
1	20-10-15	FOR TENDER

Association of Professional Engineers & Geoscientists of Saskatchewan
CERTIFICATE OF AUTHORIZATION
MPE Engineering Ltd.
Number C1334
Permission to Consult held by:

Discipline	SK. Reg. No.	Signature
CIVIL	52866	

PROFESSIONAL ENGINEER
I. KAGORO
MEMBER 52866
2021-01-18
YR. MN. DAY
SASKATCHEWAN

MPE Engineering Ltd.

ENGLISH RIVER ENTERPRISES
PROPERTY MANAGEMENT LP

WASTEWATER TREATMENT PLANT
PROCESS PIPING
BIOREACTOR AND PUMP ROOM
SECTIONS

DESIGNED	I.K.	JOB	7603-002-00
DRAWN	C.A.Z.	SCALE	1:50
DATE	NOVEMBER 2020	DRAWING	P4.5

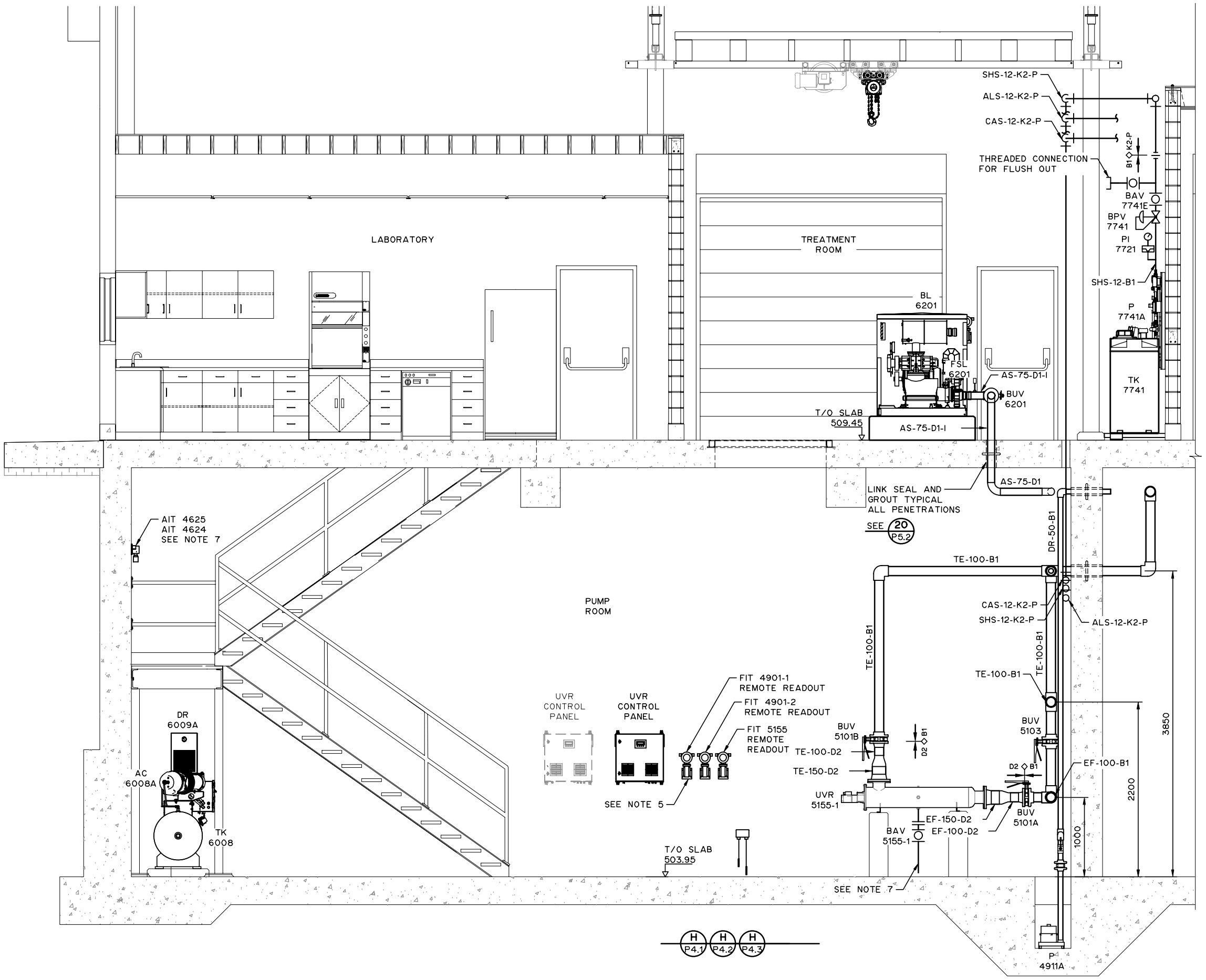

NOTES:

1. FOR INFORMATION REGARDING GENERAL NOTES, UTILITIES, ABBREVIATIONS, AND SYMBOLS, REFER TO THE LEGEND DRAWING.
2. CONTRACTOR TO PROVIDE SUPPORT FOR PIPING AND FITTINGS AS PER PIPING AND SUPPORT MANUFACTURER'S RECOMMENDATIONS.
3. STEEL PIPES LARGER THAN 75Φ SHALL NOT BE SUPPORTED FROM THE ROOF SYSTEM UNLESS NOTED OTHERWISE.
4. PVC PIPES LARGER THAN 150Φ SHALL NOT BE SUPPORTED FROM THE ROOF SYSTEM UNLESS NOTED OTHERWISE.
5. CONTRACTOR TO MOUNT ANALYZERS, FLOW METER AND LEVEL TRANSMITTER REMOTE READOUTS 1500 ABOVE FINISHED FLOOR. CONFIRM LOCATION WITH ENGINEER PRIOR TO INSTALLATION.
6. AIT 4625 AND AIT 4624 BEACONS AND HORNS ARE TO BE INSTALLED IN THE STAIRWELL LANDING SO AS TO BE VISIBLE TO ANY PERSON(S) AT THE TOP OF THE STAIRS.
7. CONTRACTOR TO NEATLY PLUMB DRAIN LINE TO NEAREST FLOOR DRAIN.

THIS DRAWING MAY HAVE BEEN MODIFIED FROM ITS ORIGINAL SIZE. ALL SCALE NOTATIONS INDICATED ARE BASED ON 11"x17" FORMAT DRAWINGS

ISSUE	YY-MM-DD	REVISION
2	21-01-15	FOR CONSTRUCTION
1	20-10-15	FOR TENDER

Association of Professional Engineers & Geoscientists of Saskatchewan
CERTIFICATE OF AUTHORIZATION
MPE Engineering Ltd.
Number C1334
Permission to Consult held by:

Discipline	Sk. Reg. No.	Signature
CIVIL	52866	

PROFESSIONAL ENGINEER KAGORO MEMBER 52866 2021-01-18 YR. MN. DAY SASKATCHEWAN

MPE Engineering Ltd.

ENGLISH RIVER ENTERPRISES PROPERTY MANAGEMENT LP

WASTEWATER TREATMENT PLANT
PROCESS PIPING
BIOREACTOR AND PUMP ROOM
SECTIONS

DESIGNED	I.K.	JOB	7603-002-00
DRAWN	L.J.S.	SCALE	1:50
DATE	NOVEMBER 2020	DRAWING	P4.6

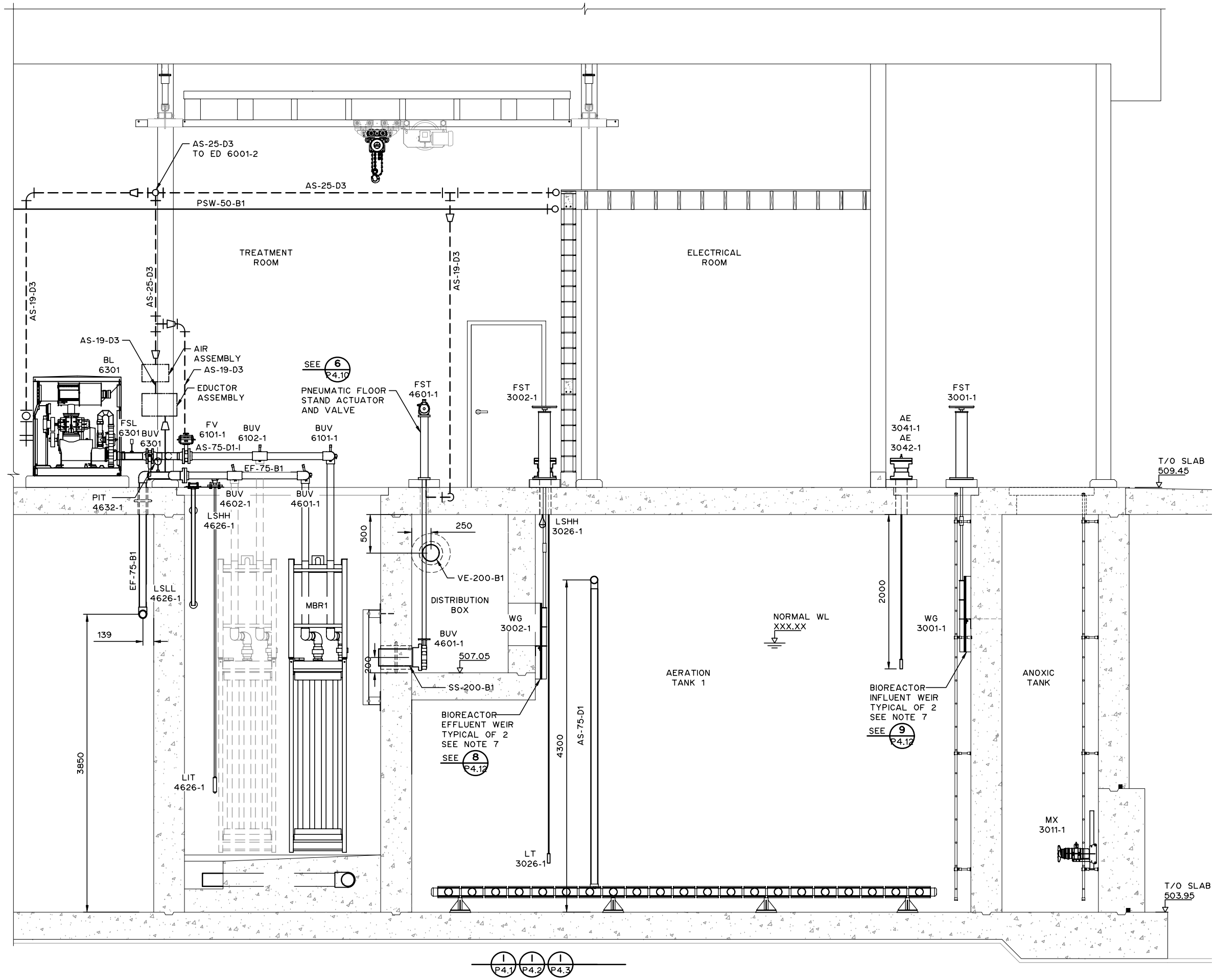

NOTES:

1. FOR INFORMATION REGARDING GENERAL NOTES, UTILITIES, ABBREVIATIONS, AND SYMBOLS, REFER TO THE LEGEND DRAWINGS.
2. CONTRACTOR TO PROVIDE SUPPORT FOR PIPING AND FITTINGS AS PER PIPING AND SUPPORT MANUFACTURER'S RECOMMENDATIONS.
3. STEEL PIPES LARGER THAN 75Φ SHALL NOT BE SUPPORTED FROM THE ROOF SYSTEM UNLESS NOTED OTHERWISE.
4. PVC PIPES LARGER THAN 150Φ SHALL NOT BE SUPPORTED FROM THE ROOF SYSTEM UNLESS NOTED OTHERWISE.
5. CONTRACTOR TO NEATLY PLUMB DRAIN LINE TO THE NEAREST FLOOR DRAIN.

THIS DRAWING MAY HAVE BEEN MODIFIED FROM ITS ORIGINAL SIZE. ALL SCALE NOTATIONS INDICATED ARE BASED ON 11"x17" FORMAT DRAWINGS

ISSUE	YY-MM-DD	REVISION
2	21-01-15	FOR CONSTRUCTION
1	20-10-15	FOR TENDER

Association of Professional Engineers & Geoscientists of Saskatchewan
CERTIFICATE OF AUTHORIZATION
MPE Engineering Ltd.
Number C1334
Permission to Consult held by:

Discipline	Sk. Reg. No.	Signature
CIVIL	52866	

PROFESSIONAL ENGINEER KAGORO MEMBER 52866 SASKATCHEWAN
2021-01-18 YR. MN. DAY

MPE Engineering Ltd.

ENGLISH RIVER ENTERPRISES PROPERTY MANAGEMENT LP

WASTEWATER TREATMENT PLANT
PROCESS PIPING
BIOREACTOR AND PUMP ROOM
SECTIONS

DESIGNED	I.K.	JOB	7603-002-00
DRAWN	C.A.Z.	SCALE	1:50
DATE	NOVEMBER 2020	DRAWING	P4.7

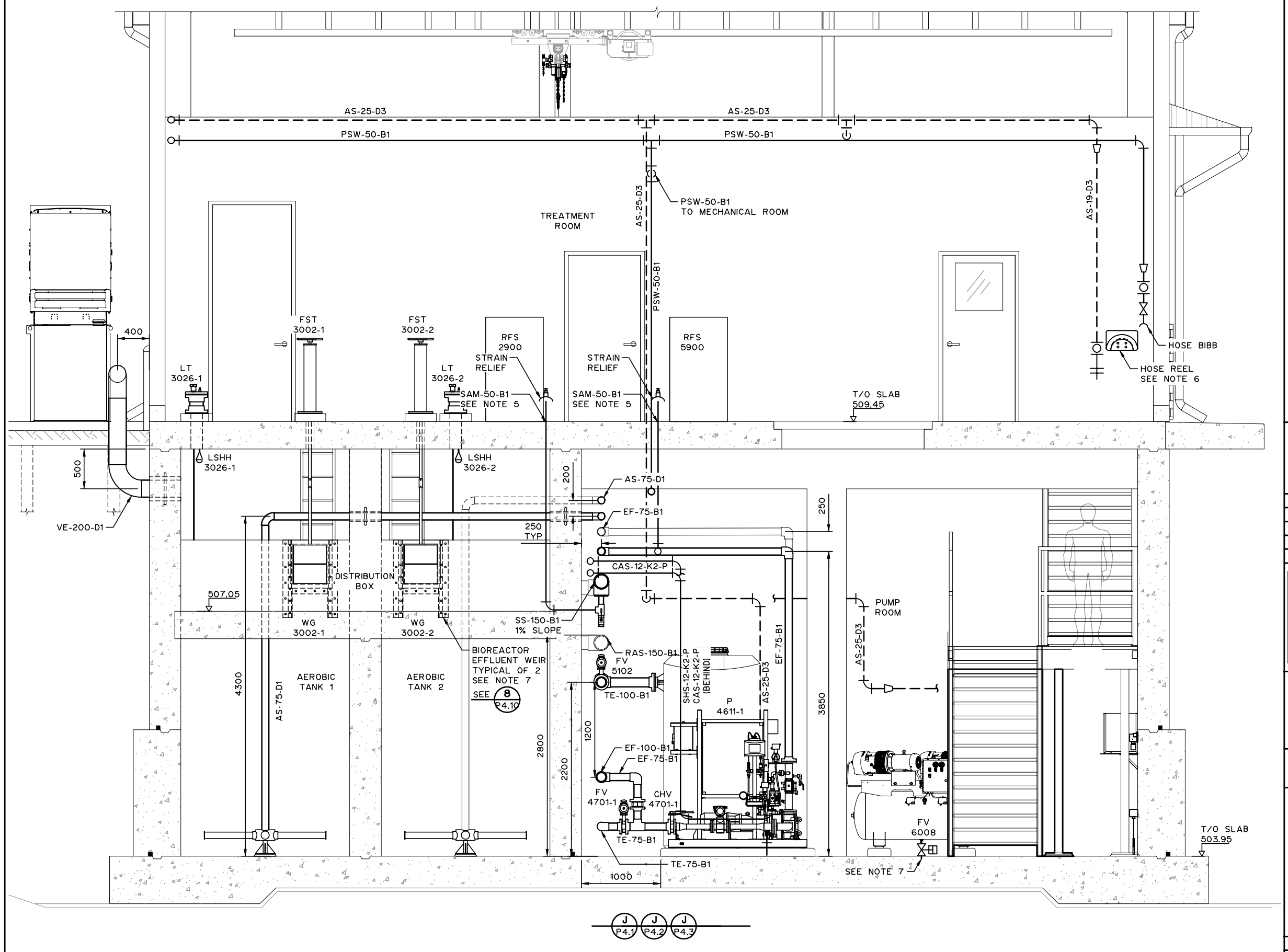

NOTES:

1. FOR INFORMATION REGARDING GENERAL NOTES, UTILITIES, ABBREVIATIONS, AND SYMBOLS, REFER TO THE LEGENDD DRAWINGS.
2. CONTRACTOR TO PROVIDE SUPPORT FOR PIPING AND FITTINGS AS PER PIPING AND SUPPORT MANUFACTURER'S RECOMMENDATIONS.
3. STEEL PIPES LARGER THAN 75Φ SHALL NOT BE SUPPORTED FROM THE ROOF SYSTEM UNLESS NOTED OTHERWISE.
4. PVC PIPES LARGER THAN 150Φ SHALL NOT BE SUPPORTED FROM THE ROOF SYSTEM UNLESS NOTED OTHERWISE.
5. 50Φ SCHEDULE 40 PVC CONDUIT CAST IN SLAB FOR PLANT INFLUENT SAMPLE TUBING. CONDUIT TO COME WITH LONG RADIUS 90° ELBOWS. CAULK OPENING AROUND TUBING TO ENSURE GAS TIGHT SEAL.
6. SEE STANDARD DETAIL IN SECTION 15015 C/W 25Φ HOSE.
7. CONTRACTOR TO NEATLY PLUMB DRAIN LINE TO NEAREST FLOOR DRAIN.

THIS DRAWING MAY HAVE BEEN MODIFIED FROM ITS ORIGINAL SIZE. ALL SCALE NOTATIONS INDICATED ARE BASED ON 11"x17" FORMAT DRAWINGS

ISSUE	YY-MM-DD	REVISION
2	21-01-15	FOR CONSTRUCTION
1	20-10-15	FOR TENDER

Association of Professional Engineers & Geoscientists of Saskatchewan
CERTIFICATE OF AUTHORIZATION
MPE Engineering Ltd.
Number C1334
Permission to Consult held by:

Discipline	Sk. Reg. No.	Signature
CIVIL	52866	

PROFESSIONAL ENGINEER
I. KAGOBE
MEMBER 52866
2021-01-18
YR. MN. DAY
SASKATCHEWAN

MPE Engineering Ltd.

ENGLISH RIVER ENTERPRISES PROPERTY MANAGEMENT LP

WASTEWATER TREATMENT PLANT
PROCESS PIPING
BIOREACTOR AND PUMP ROOM
SECTIONS

DESIGNED	I.K.	JOB	7603-002-00
DRAWN	L.J.S.	SCALE	1:50
DATE	NOVEMBER 2020	DRAWING	P4.8

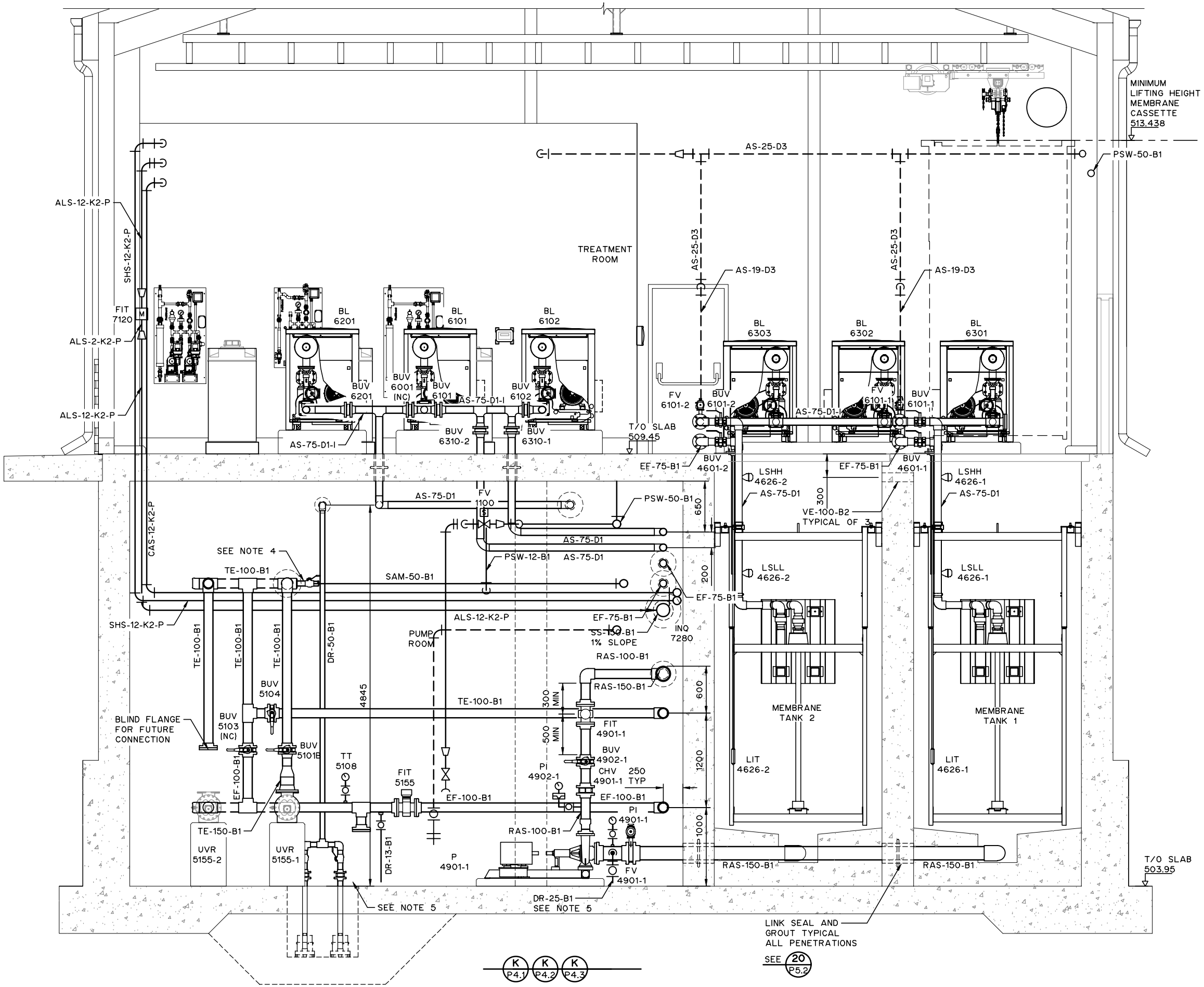

NOTES:

1. CONTRACTOR TO PROVIDE SUPPORT FOR PIPING AND FITTINGS AS PER PIPING AND SUPPORT MANUFACTURER'S RECOMMENDATIONS.
2. STEEL PIPES LARGER THAN 75Φ SHALL NOT BE SUPPORTED FROM THE ROOF SYSTEM UNLESS NOTED OTHERWISE.
3. PVC PIPES LARGER THAN 150Φ SHALL NOT BE SUPPORTED FROM THE ROOF SYSTEM UNLESS NOTED OTHERWISE.
4. 50Φ SCHEDULE 40 PVC CONDUIT FOR PLANT INFLUENT SAMPLE TUBING TO BE RUN BELOW SLAB. CONDUIT TO COME WITH LONG RADIUS 90° ELBOWS. CAULK OPENING AROUND TUBING TO ENSURE GAS TIGHT SEAL.
5. CONTRACTOR TO NEATLY PLUMB DRAIN LINE TO NEAREST FLOOR DRAIN

THIS DRAWING MAY HAVE BEEN MODIFIED FROM ITS ORIGINAL SIZE. ALL SCALE NOTATIONS INDICATED ARE BASED ON 11"x17" FORMAT DRAWINGS

ISSUE	YY-MM-DD	REVISION
2	21-01-15	FOR CONSTRUCTION
1	20-10-15	FOR TENDER

Association of Professional Engineers & Geoscientists of Saskatchewan
CERTIFICATE OF AUTHORIZATION
MPE Engineering Ltd.
Number C1334
Permission to Consult held by:

Discipline	Sk. Reg. No.	Signature
CIVIL	52866	

PROFESSIONAL ENGINEER KAGORO MEMBER 52866 SASKATCHEWAN
2021-01-18 YR. MN. DAY

MPE Engineering Ltd.

ENGLISH RIVER ENTERPRISES PROPERTY MANAGEMENT LP

WASTEWATER TREATMENT PLANT
PROCESS PIPING
BIOREACTOR AND PUMP ROOM
SECTIONS

DESIGNED	I.K.	JOB	7603-002-00
DRAWN	L.J.S.	SCALE	1:50
DATE	NOVEMBER 2020	DRAWING	P4.9

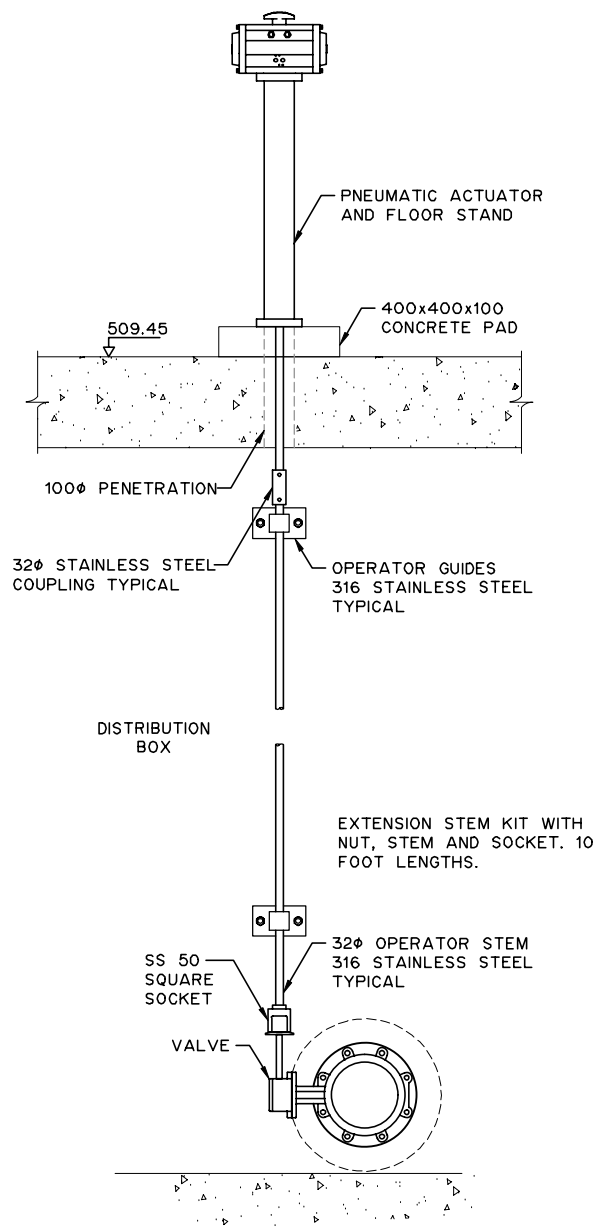

SUBMERGED VALVE WITH PNUEMATIC OPERATOR DETAIL

6 P4.3 6 P4.7 1:25

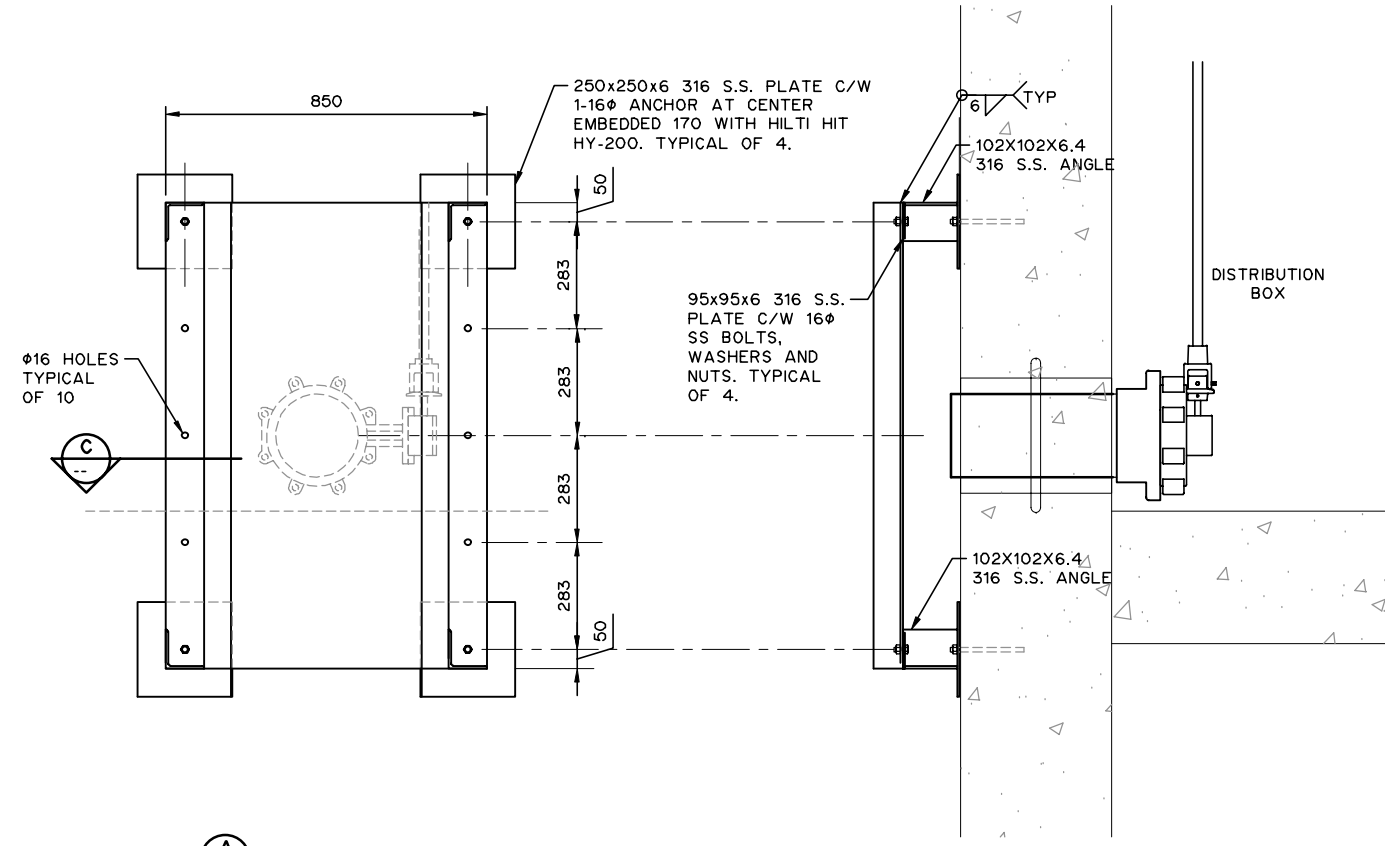

A 1:20

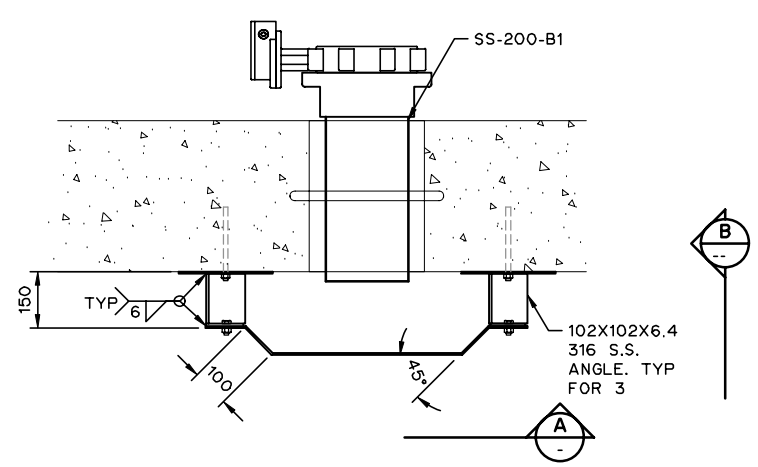

MEMBRANE TANK BAFFLE PLATE

7 P3.1 7 P4.1 7 P4.2 1:20

NOTES:

1. FOR INFORMATION REGARDING GENERAL NOTES, UTILITIES, ABBREVIATIONS AND SYMBOLS, REFER TO THE LEGEND DRAWINGS.
2. CONTRACTOR TO PROVIDE SUPPORT FOR PIPING AND FITTINGS AS PER PIPING AND SUPPORT MANUFACTURER'S RECOMMENDATIONS.
3. STEEL PIPES LARGER THAN 75Φ SHALL NOT BE SUPPORTED FROM THE ROOF SYSTEM UNLESS NOTED OTHERWISE.
4. PVC PIPES LARGER THAN 150Φ SHALL NOT BE SUPPORTED FROM THE ROOF SYSTEM UNLESS NOTED OTHERWISE.

THIS DRAWING MAY HAVE BEEN MODIFIED FROM ITS ORIGINAL SIZE. ALL SCALE NOTATIONS INDICATED ARE BASED ON 11"x17" FORMAT DRAWINGS

ISSUE	YY-MM-DD	REVISION
2	21-01-15	FOR CONSTRUCTION
1	20-10-15	FOR TENDER

Association of Professional Engineers & Geoscientists of Saskatchewan
CERTIFICATE OF AUTHORIZATION
MPE Engineering Ltd.
Number C1334
Permission to Consult held by:

Discipline	Sk. Reg. No.	Signature
CIVIL	52866	

PROFESSIONAL ENGINEER KASOBO MEMBER 52866 2021-01-18 YR. MN. DAY SASKATCHEWAN

MPE Engineering Ltd.

ENGLISH RIVER ENTERPRISES PROPERTY MANAGEMENT LP

WASTEWATER TREATMENT PLANT
PROCESS PIPING
BIOREACTOR AND PUMP ROOM
SUBMERGED VALVE DETAILS

DESIGNED	I.K.	JOB	7603-002-00
DRAWN	L.J.S.	SCALE	SHOWN
DATE	NOVEMBER 2020	DRAWING	P4.10

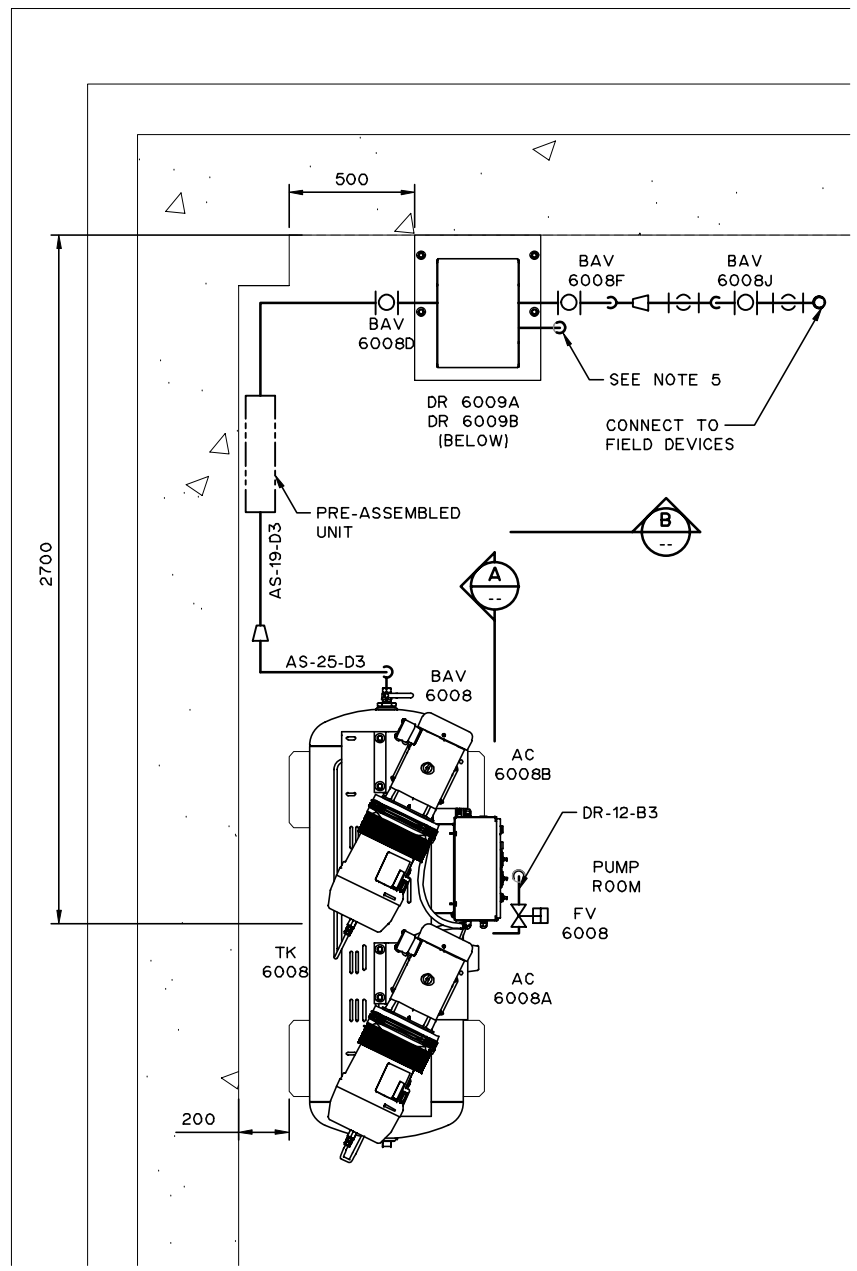

PLAN

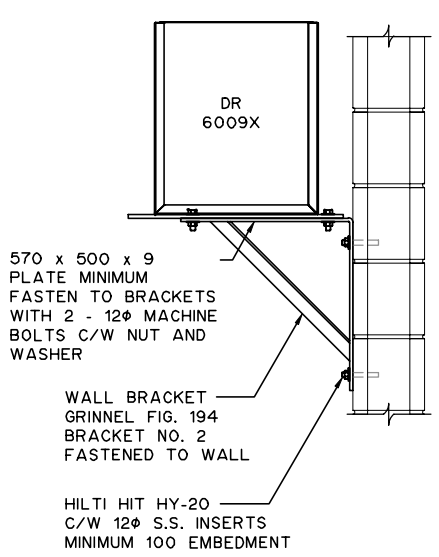

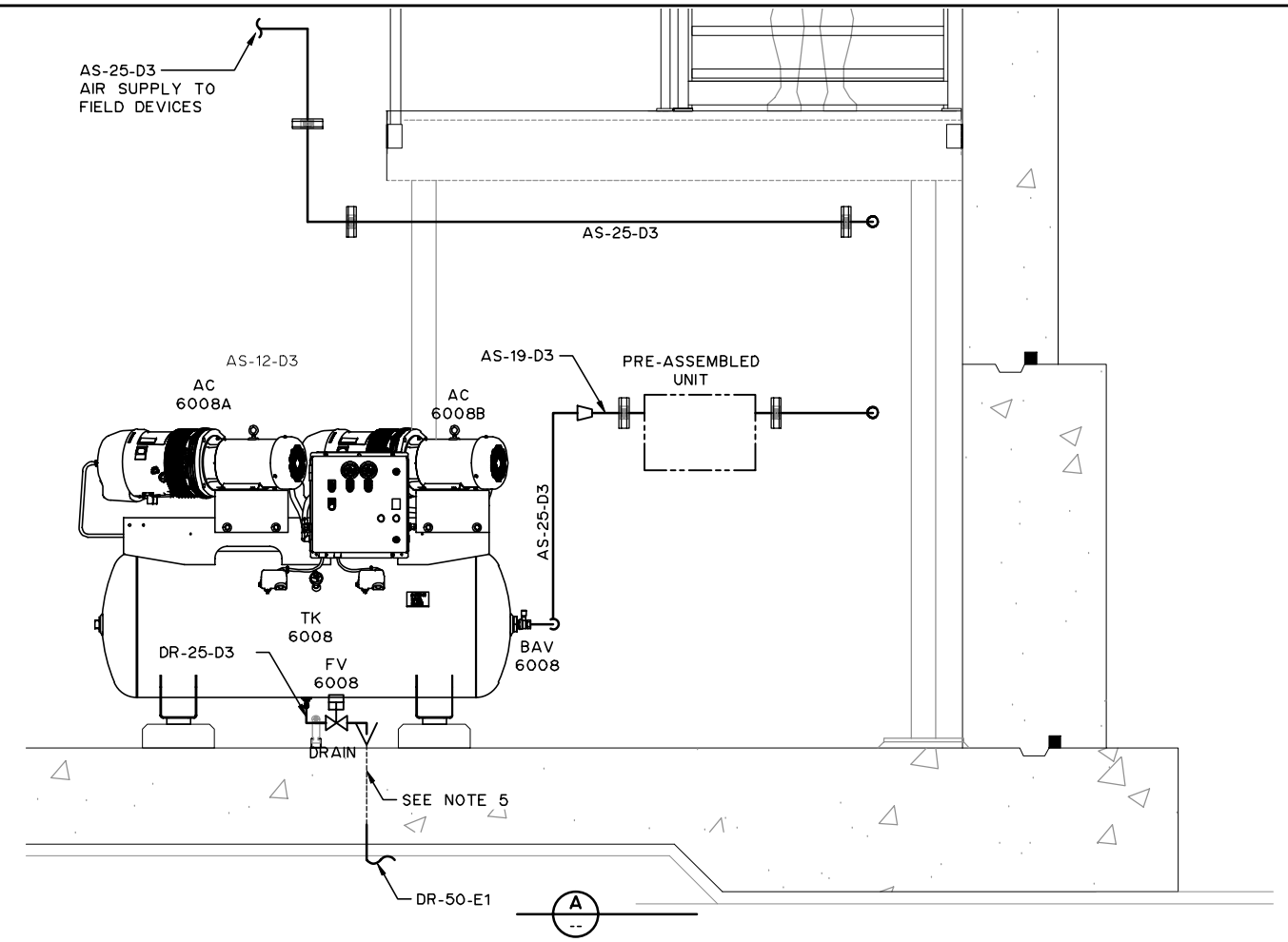

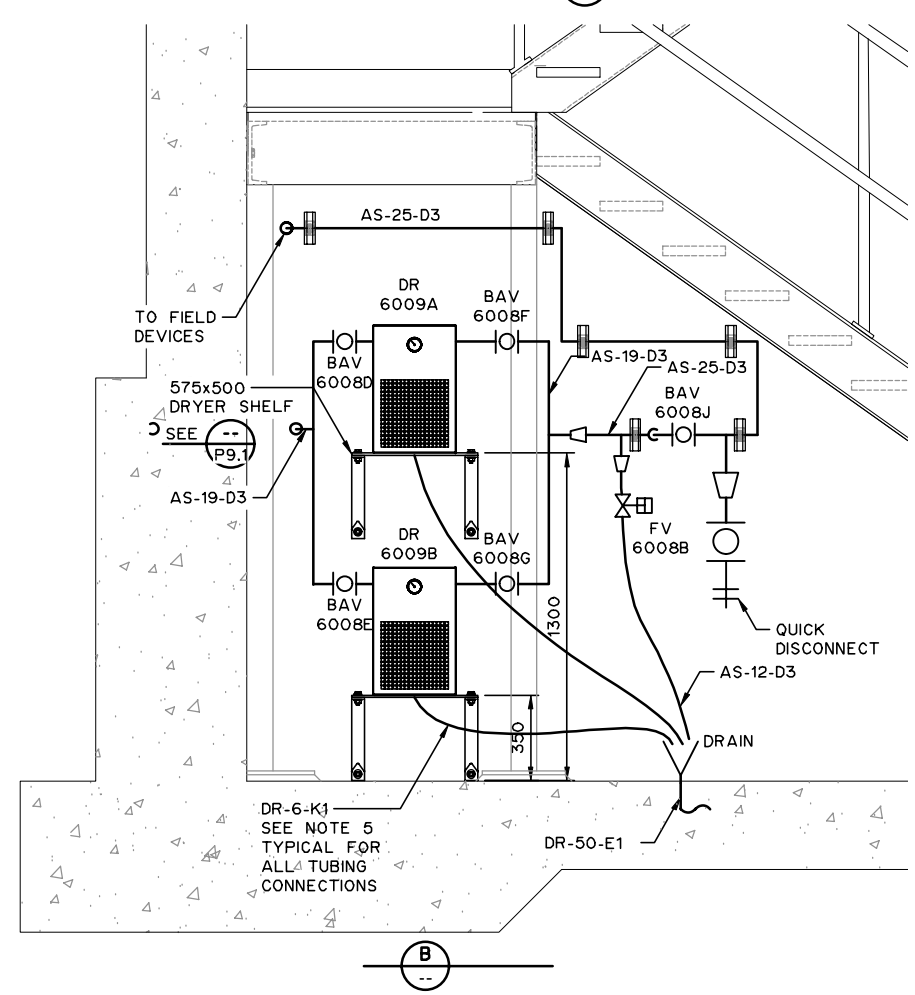

NOTES:

1. FOR INFORMATION REGARDING GENERAL NOTES, UTILITIES, ABBREVIATIONS AND SYMBOLS, REFER TO THE LEGEND DRAWINGS.
2. CONTRACTOR TO PROVIDE SUPPORT FOR PIPING AND FITTINGS AS PER PIPING AND SUPPORT MANUFACTURER'S RECOMMENDATIONS.
3. STEEL PIPES LARGER THAN 75Φ SHALL NOT BE SUPPORTED FROM THE ROOF SYSTEM UNLESS NOTED OTHERWISE.
4. PVC PIPES LARGER THAN 150Φ SHALL NOT BE SUPPORTED FROM THE ROOF SYSTEM UNLESS NOTED OTHERWISE.
5. CONTRACTOR TO NEATLY PLUMB WASTE TUBING TO NEAREST FLOOR DRAIN.

THIS DRAWING MAY HAVE BEEN MODIFIED FROM ITS ORIGINAL SIZE. ALL SCALE NOTATIONS INDICATED ARE BASED ON 11"x17" FORMAT DRAWINGS

ISSUE	YY-MM-DD	REVISION
2	21-01-15	FOR CONSTRUCTION
1	20-10-15	FOR TENDER

Association of Professional Engineers & Geoscientists of Saskatchewan
CERTIFICATE OF AUTHORIZATION
MPE Engineering Ltd.
Number C1334
Permission to Consult held by:

Discipline	Sk. Reg. No.	Signature
CIVIL	52866	

PROFESSIONAL ENGINEER
I. KAGORO
MEMBER 52866
2021-01-18
YR. MN. DAY
SASKATCHEWAN

MPE Engineering Ltd.

ENGLISH RIVER ENTERPRISES PROPERTY MANAGEMENT LP

WASTEWATER TREATMENT PLANT
PROCESS PIPING
BIOREACTOR AND PUMP ROOM
AIR COMPRESSOR SYSTEM

DESIGNED	I.K.	JOB	7603-002-00
DRAWN	L.J.S.	SCALE	1:30
DATE	NOVEMBER 2020	DRAWING	P4.11

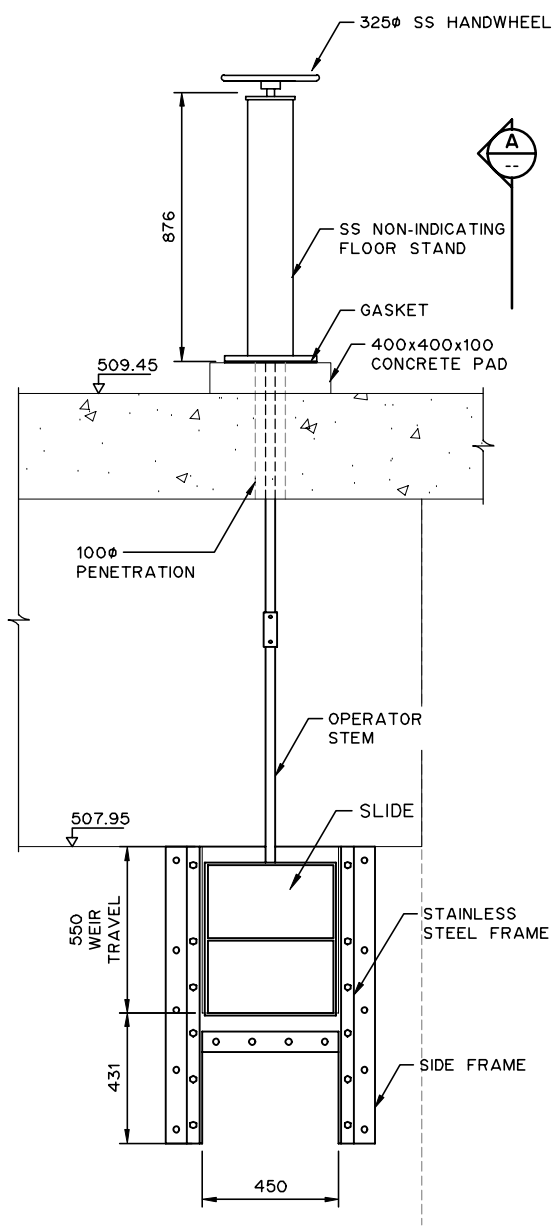

EFFLUENT TANK WEIR GATE

8 P3.6 8 P4.1 8 P4.2 8 P4.5 8 P4.7 8 NTS

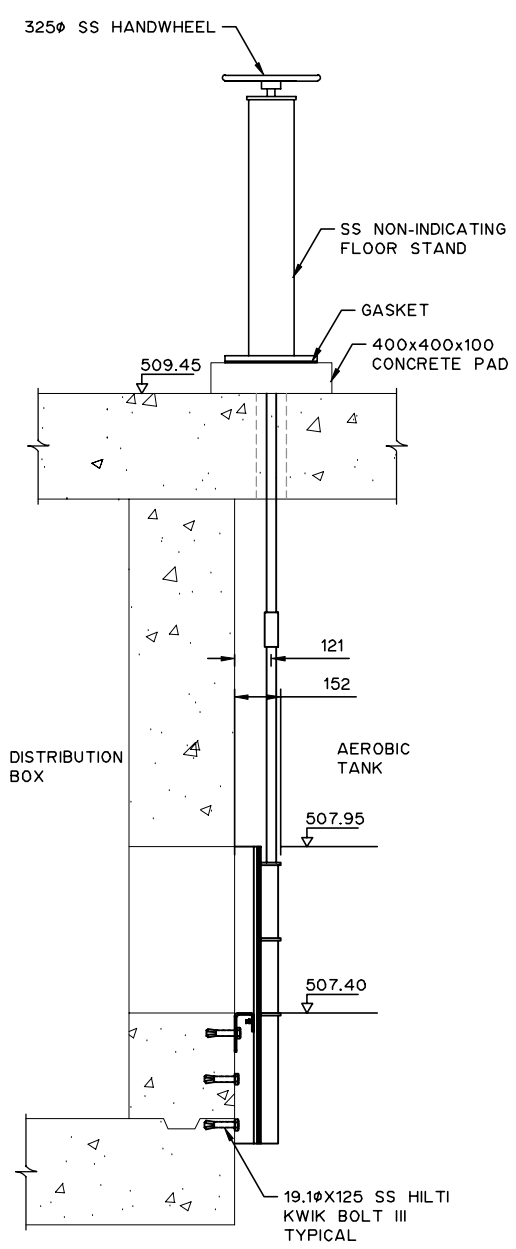

A
--

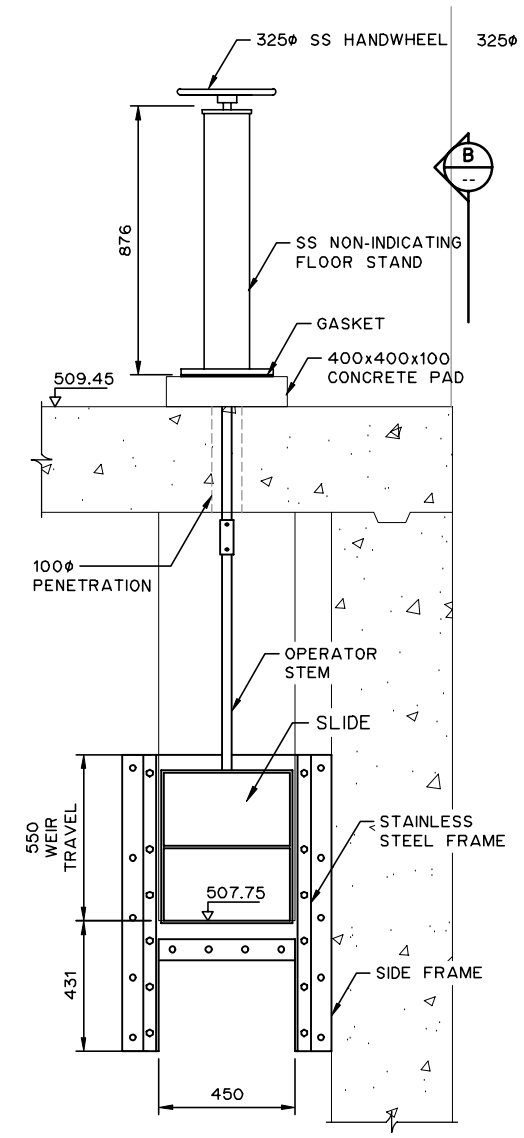

INFLUENT TANK WEIR GATE

9 P4.1 9 P4.2 9 P4.7 NTS

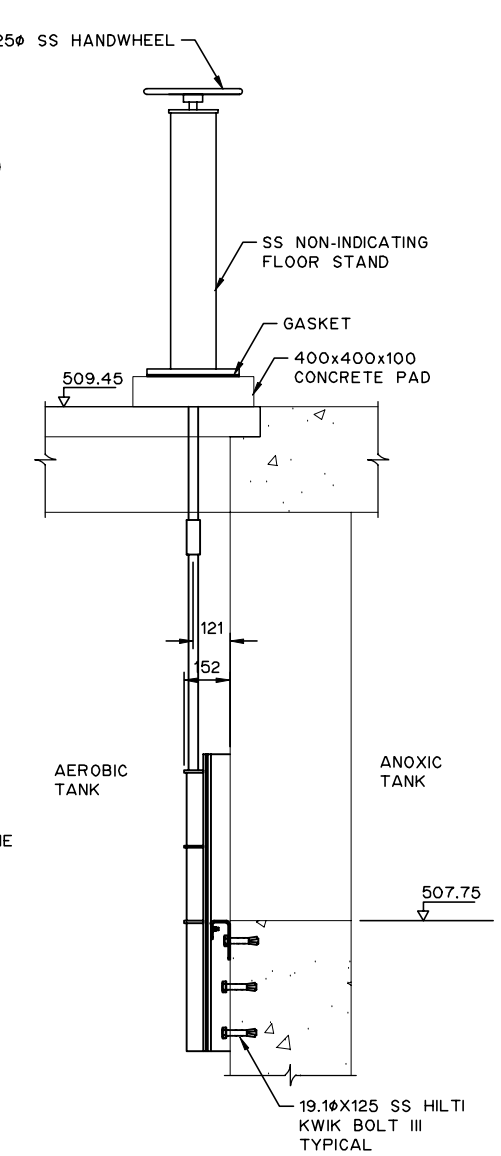

B
--

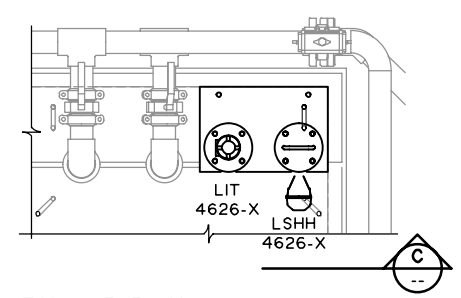

TANK LEVEL MONITORING MOUNT MEMBRANE

10 P3.2 10 P4.3 1:30

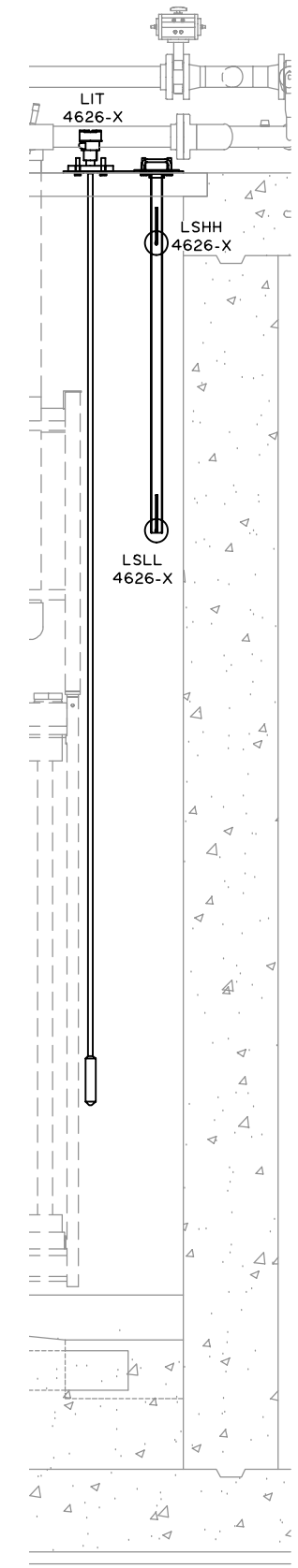

C
--
1:30

THIS DRAWING MAY HAVE BEEN MODIFIED FROM ITS ORIGINAL SIZE. ALL SCALE NOTATIONS INDICATED ARE BASED ON 11"x17" FORMAT DRAWINGS

ISSUE	YY-MM-DD	REVISION
2	21-01-15	FOR CONSTRUCTION
1	20-10-15	FOR TENDER

Association of Professional Engineers & Geoscientists of Saskatchewan
CERTIFICATE OF AUTHORIZATION
MPE Engineering Ltd.
Number C1334
Permission to Consult held by:

Discipline	Sk. Reg. No.	Signature
CIVIL	52866	

PROFESSIONAL ENGINEER
KAGOBE
MEMBER 52866
2021-01-18
YR. MN. DAY
SASKATCHEWAN

MPE Engineering Ltd.

ENGLISH RIVER ENTERPRISES PROPERTY MANAGEMENT LP

WASTEWATER TREATMENT PLANT
PROCESS PIPING
BIOREACTOR AND PUMP ROOM
DETAILS

DESIGNED	I.K.	JOB	7603-002-00
DRAWN	L.J.S.	SCALE	SHOWN
DATE	NOVEMBER 2020	DRAWING	P4.12

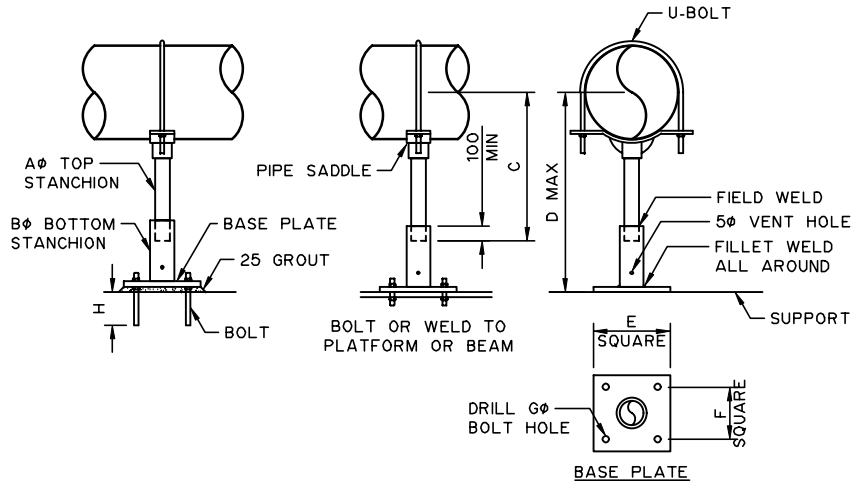

NOTES:

1. STANCHION MATERIAL SCH. 40 316 STAINLESS STEEL PIPE, OR AS PER SPECIFICATIONS.
   BASE PLATE - 316 STAINLESS STEEL
   PIPE STANCHION SADDLE - MAY BE MYATT FIG. 306 OR ANVIL FIG. 259

PIPE SIZE		65	80	100	125	150	200	250	300	350	400	450	500	600
A		40	65	65	65	75	75	75	100	100	100	150	150	150
B		65	75	75	75	100	100	100	150	150	150	200	200	200
C	MIN	200	210	235	250	270	300	350	380	410	450	500	530	600
	MAX	330	340	350	375	390	420	460	500	530	570	610	650	720
D MAX		1000	1200	1200	1200	1500	1500	1500	1800	1800	1800	2000	2000	2000
THICK x E SQUARE		8 150	8 150	8 200	8 200	12 200	12 200	12 200	12 250	12 250	12 250	16 300	16 300	16 300
F SQUARE		100	100	150	150	150	150	150	190	190	190	240	240	240
G ⌀ x No. HOLES		15⌀ x 4		20⌀ x 4						25⌀ x 4				
BOLT ⌀xH		M12x100 HILTI HIT HY-200		M16x150 HILTI HIT HY-200						M20x150 (MIN) HILTI HIT HY-200				

PIPE SUPPORT TYPE 1

11 -- NTS

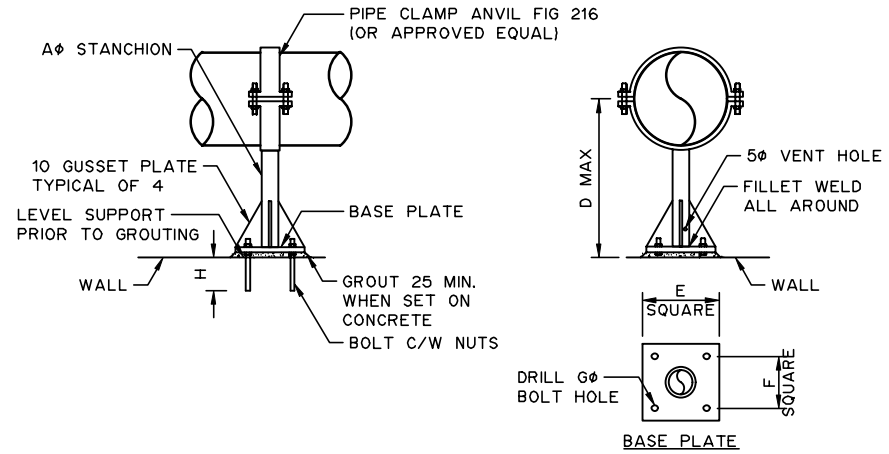

NOTES:

1. STANCHION MATERIAL SCH 40 STAINLESS STEEL 316 PIPE, OR AS PER SPECIFICATIONS. BASEPLATE - STAINLESS STEEL 316.
2. REDUCE EMBEDMENT FOR FASTENING TO BLOCK WALLS: 150 FOR 200 WALL, 100 FOR 150 WALL. (ENSURE ANCHORS EMBED INTO CORE FILL)
3. IN WET AREAS ALL CLAMPS, BOLTS, NUTS, WASHERS AND STEEL PLATE ETC. TO BE STAINLESS STEEL 316.

PIPE SIZE		65	80	100	125	150	200	250	300	350	400	500	600	750
A		65	75	75	75	100	100	100	150	150	150	150	150	150
D MAX		1000	1200	1200	1200	1500	1500	1500	1800	1800	1800	1800	1800	1800
THICK x E SQUARE		8 200	8 200	8 250	8 250	12 250	12 250	12 250	12 300	12 300	12 300	12 300	12 300	12 300
F SQUARE		150	150	200	200	200	200	200	240	240	240	240	240	240
G ⌀ x No. HOLES		15⌀ x 4		20⌀ x 4						25⌀ x 4				
BOLT ⌀xH		M12x100 HILTI HIT HY-200		M16x150 HILTI HIT HY-200						M20x150 (MIN) HILTI HIT HY-200				

PIPE SUPPORT TYPE 2

12 -- NTS

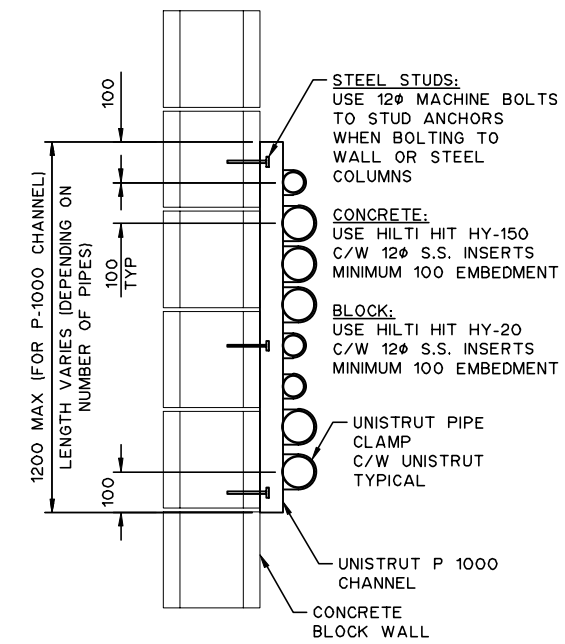

NOTES:

1. CONTRACTOR TO FOLLOW PIPE UNISTRUT MANUFACTURER RECOMMENDATIONS FOR LINE SPACING AND ALLOWABLE SPAN.

UNISTRUT CHANNEL PIPE SUPPORT FOR 50mm AND SMALLER

15 -- NTS

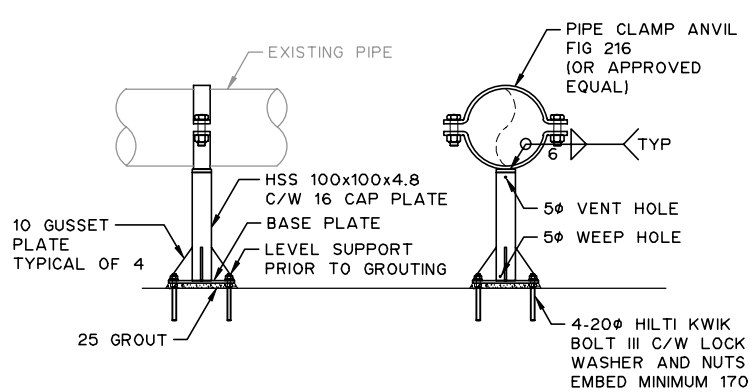

TYPE A PIPE SUPPORT

13 -- NTS

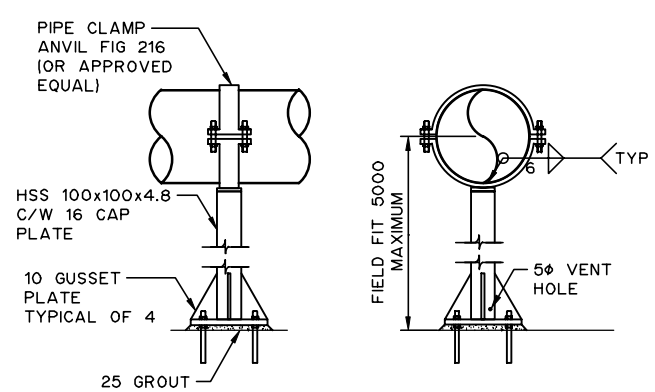

TYPE B PIPE SUPPORT

14 -- NTS

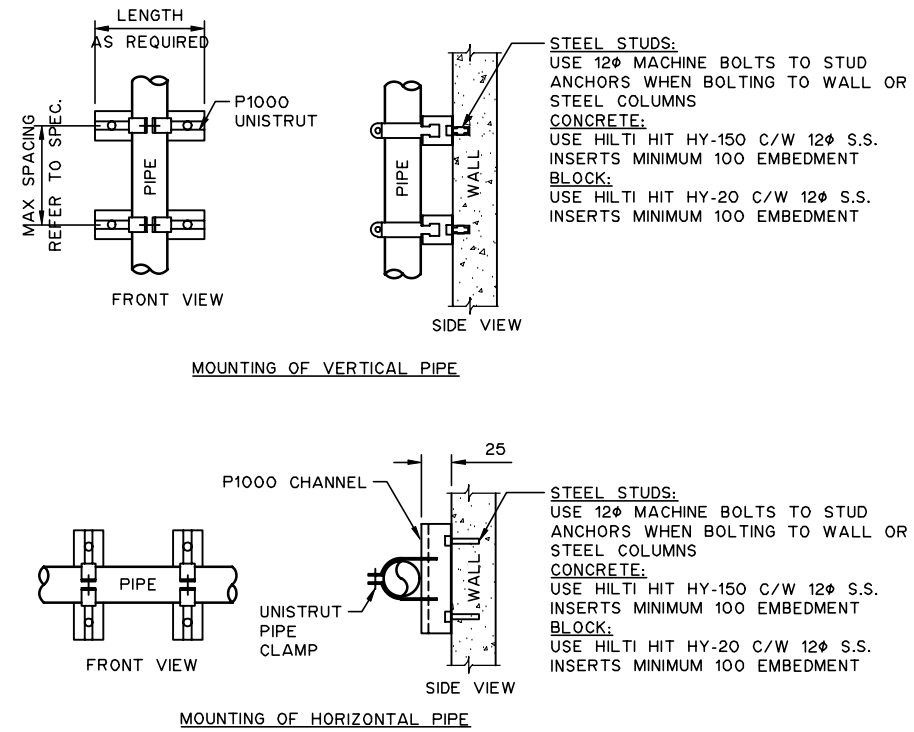

UNISTRUT PIPE SUPPORT UP TO 50mm PIPE

16 -- NTS

NOTES:

1. FOR INFORMATION REGARDING GENERAL NOTES, UTILITIES, ABBREVIATIONS AND SYMBOLS, REFER TO THE LEGEND DRAWINGS.

THIS DRAWING MAY HAVE BEEN MODIFIED FROM ITS ORIGINAL SIZE. ALL SCALE NOTATIONS INDICATED ARE BASED ON 11"x17" FORMAT DRAWINGS

ISSUE	YY-MM-DD	REVISION
2	21-01-15	FOR CONSTRUCTION
1	20-10-15	FOR TENDER

Association of Professional Engineers & Geoscientists of Saskatchewan
CERTIFICATE OF AUTHORIZATION
MPE Engineering Ltd.
Number C1334
Permission to Consult held by:

Discipline	Sk. Reg. No.	Signature
CIVIL	52866	

PROFESSIONAL ENGINEER KASOBO MEMBER 52866 2021-01-18 YR. MN. DAY SASKATCHEWAN

MPE Engineering Ltd.

ENGLISH RIVER ENTERPRISES PROPERTY MANAGEMENT LP

WASTEWATER TREATMENT PLANT
PROCESS PIPING
TYPICAL DETAILS SHEET 1

DESIGNED	I.K.	JOB	7603-002-00
DRAWN	L.J.S.	SCALE	AS SHOWN
DATE	NOVEMBER 2020	DRAWING	P5.1

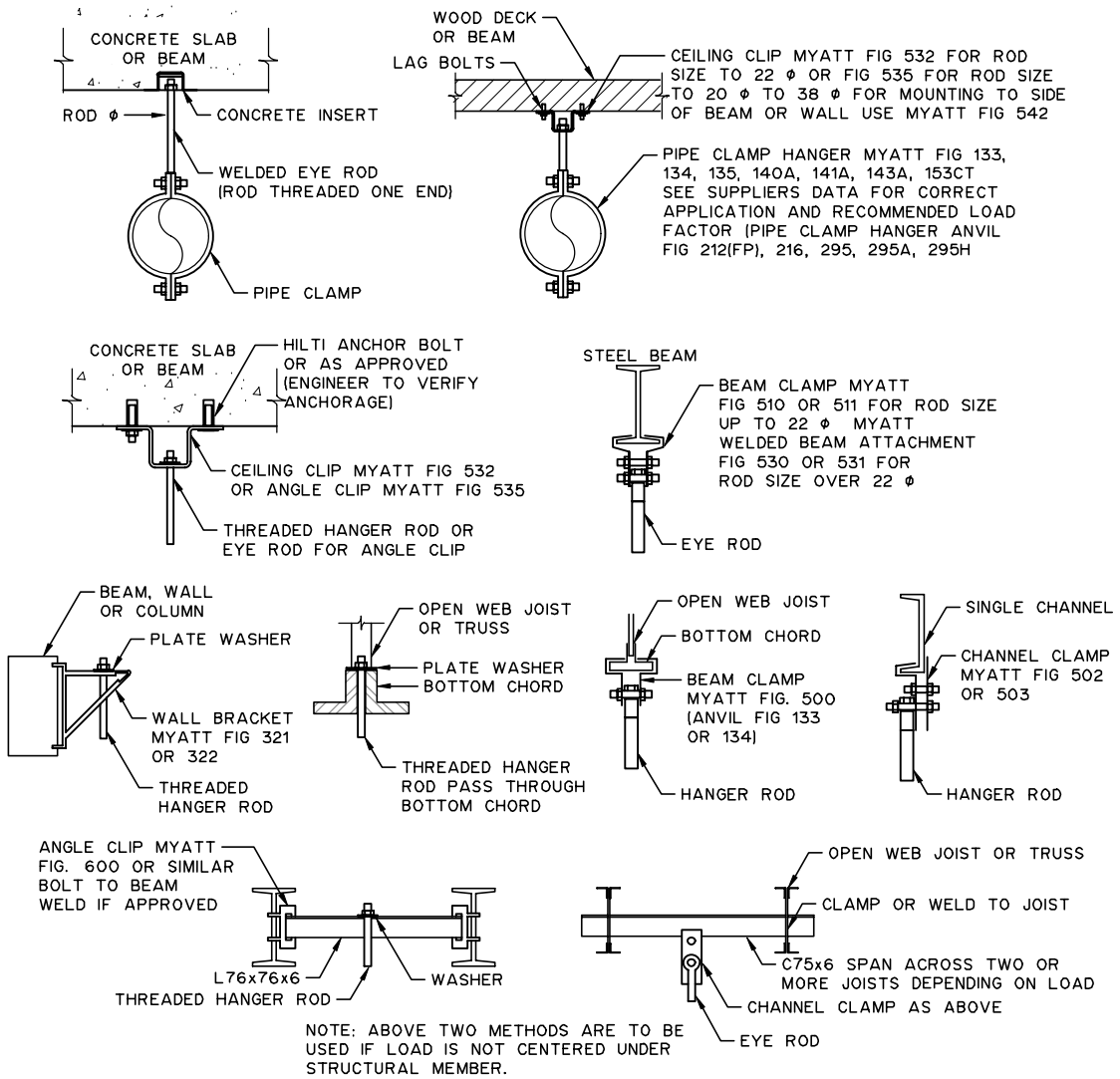

NOTES:
1. MANUFACTURED COMPONENTS MAY BE ORDERED FROM MYATT, ANVIL OR AS APPROVED.
2. FABRICATED COMPONENTS SHOP PRIMED OR GALVANIZED AS PER SPECIFICATIONS.

PIPE SIZE	10	15	20	25	30	40	50	65	75	100	150
CLEVIS No.	ROD Φ										
MYATT 122	10	10	10	10	10	10	10	12	12	12	
MYATT 124			10	10	10	10	10	12	12	16	20
MYATT 125									20	22	25
MYATT 126										20	20
MYATT 151		10	10	10	10	10	10	12	12	12	20

STANDARD PIPE CLAMP HANGER DETAILS

17 -- NTS

NOTE: CONTRACTOR TO PROVIDE SUPPORT FOR PIPING AND FITTINGS AS PER MANUFACTURERS RECOMMENDATIONS.

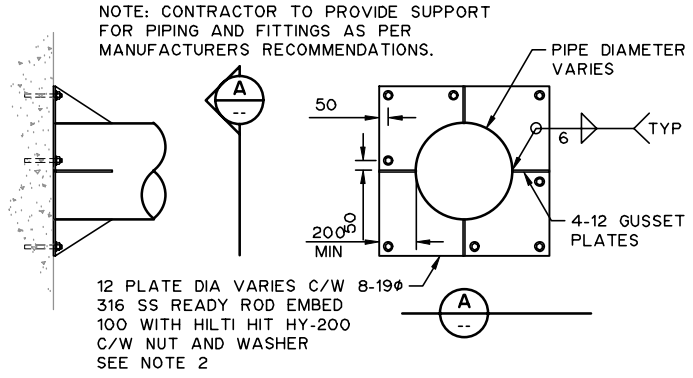

TYPICAL THRUST SUPPORT PLATE DETAIL

18 -- 1:20

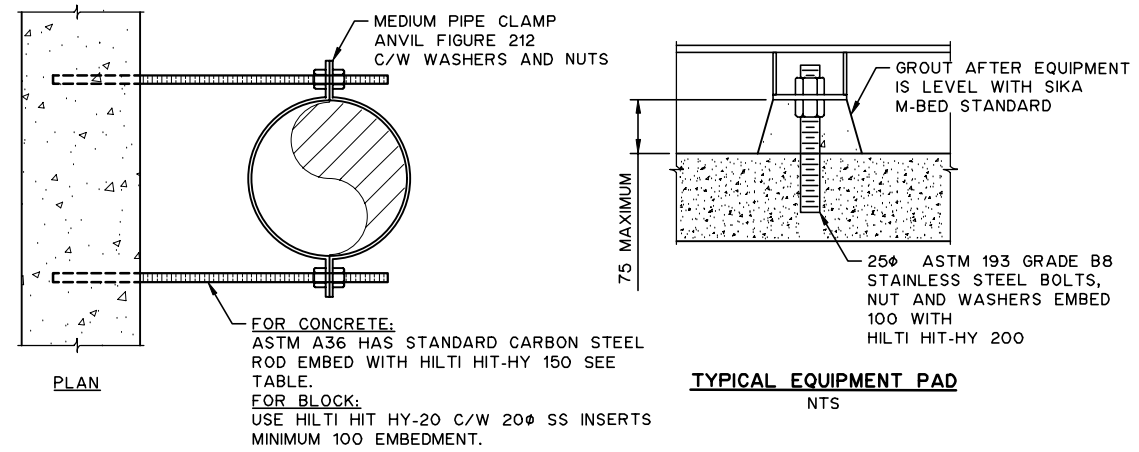

TYPICAL EQUIPMENT PAD

NTS

ANVIL FIGURE 212		
PIPE SIZE (mm)	ROD Φ	MIN. EMBED
25 TO 38	8	100
50 TO 89	12.5	127
100 TO 125	16	127
150 TO 200	19	170
250 TO 400	22	190
450	25	225
500 TO 600	32	250

NOTE: IF FASTENED TO BLOCK WALL, VERIFY ANCHORAGE WITH ENGINEER.

RISER /HANGER PIPE SUPPORT TYPE 4

19 -- NTS

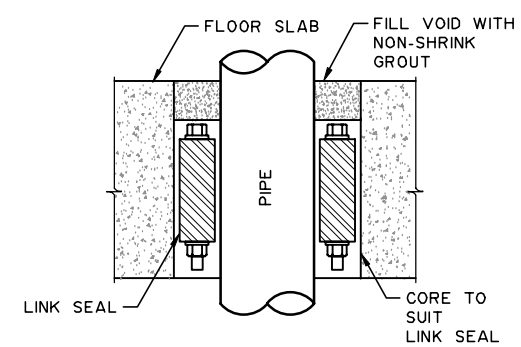

FLOOR PENETRATION

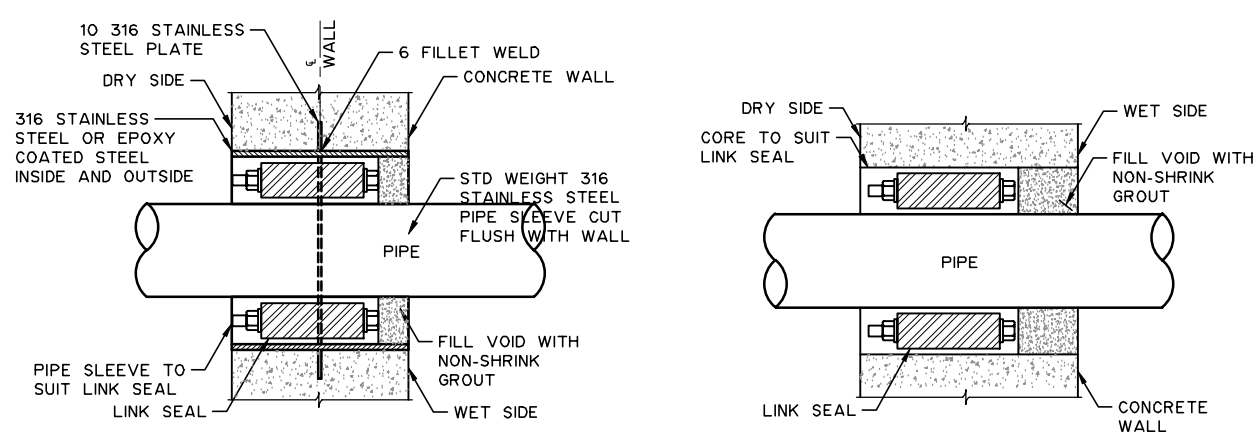

WALL SLEEVE IN CONCRETE WALL

WALL PENETRATION

TYPICAL PENETRATION AND LINK SEALS

20 -- NTS

NOTES:
1. FOR INFORMATION REGARDING GENERAL NOTES, UTILITIES, ABBREVIATIONS AND SYMBOLS, REFER TO THE LEGEND DRAWINGS.
2. ENSURE JOINT BETWEEN PLATE AND CONCRETE IS WATER TIGHT. PROVIDE GASKETS AS REQUIRED. CAULK WITH SIKAFLEX 1A.

THIS DRAWING MAY HAVE BEEN MODIFIED FROM ITS ORIGINAL SIZE. ALL SCALE NOTATIONS INDICATED ARE BASED ON 11"x17" FORMAT DRAWINGS

ISSUE	YY-MM-DD	REVISION
2	21-01-15	FOR CONSTRUCTION
1	20-10-15	FOR TENDER

Association of Professional Engineers & Geoscientists of Saskatchewan
CERTIFICATE OF AUTHORIZATION
MPE Engineering Ltd.
Number C1334
Permission to Consult held by:

Discipline	Sk. Reg. No.	Signature
CIVIL	52866	

PROFESSIONAL ENGINEER KAGORO MEMBER 52866 2021-01-18 YR. MN. DAY SASKATCHEWAN

MPE Engineering Ltd.

ENGLISH RIVER ENTERPRISES PROPERTY MANAGEMENT LP

WASTEWATER TREATMENT PLANT
PROCESS PIPING
TYPICAL DETAILS SHEET 2

DESIGNED	I.K.	JOB	7603-002-00
DRAWN	L.J.S.	SCALE	AS SHOWN
DATE	NOVEMBER 2020	DRAWING	P5.2

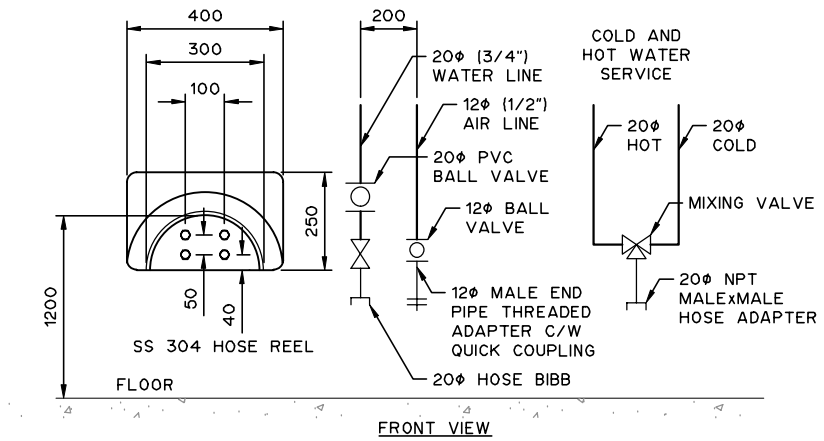

FRONT VIEW

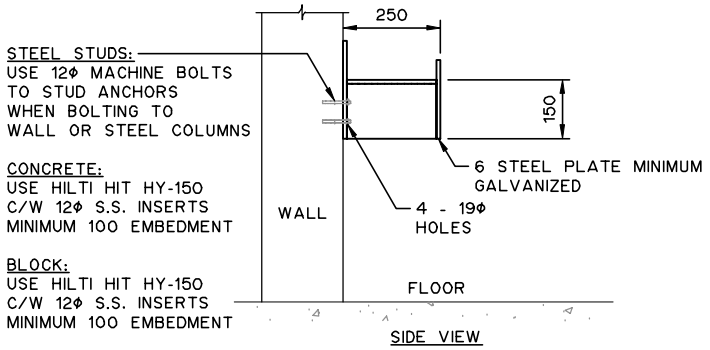

SIDE VIEW

HOSE REEL AND PIPING DETAIL FOR PLANT SERVICE WATER AND COMPRESSED AIR

21 -- NTS

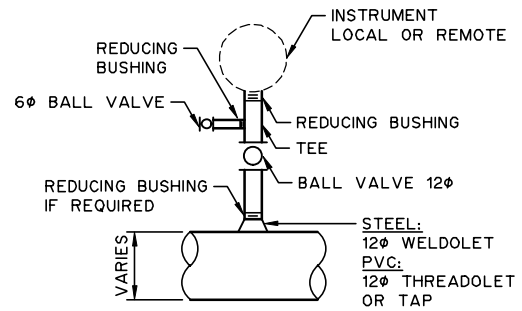

HORIZONTAL PIPING, TOP CONNECTION

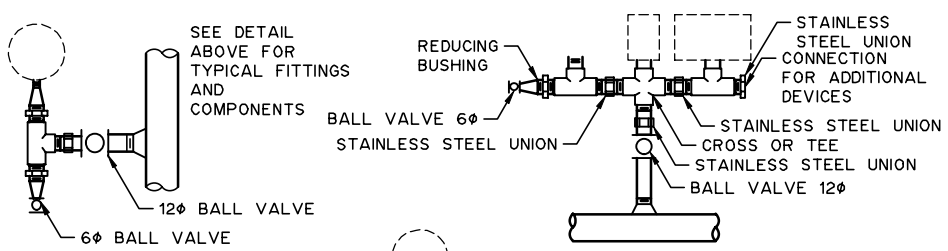

VERTICAL PIPING, SIDE CONNECTION

MULTI INSTRUMENT CONNECTION

NOTE: ALL PIPING FOR INSTRUMENTATION TO BE 12Φ AND 316 SCH40 STAINLESS STEEL UNLESS NOTED OTHERWISE.

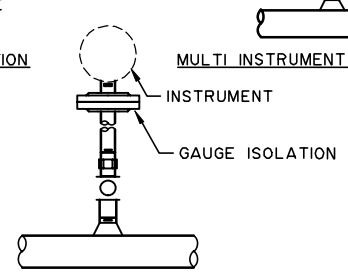

GAUGE ISOLATION

INSTRUMENT CONNECTION DETAILS

22 -- NTS

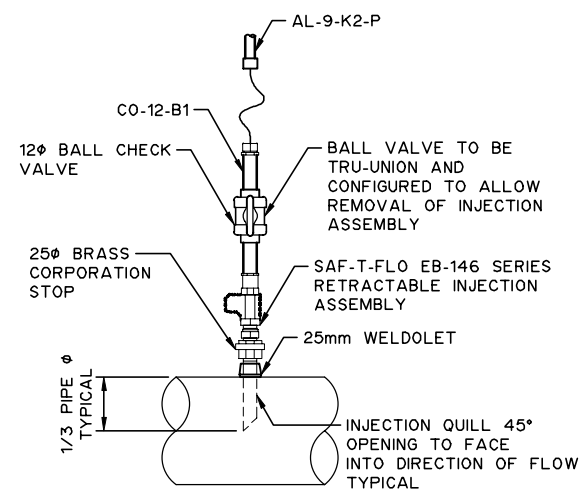

ALUM INJECTION DETAIL

23 -- NTS

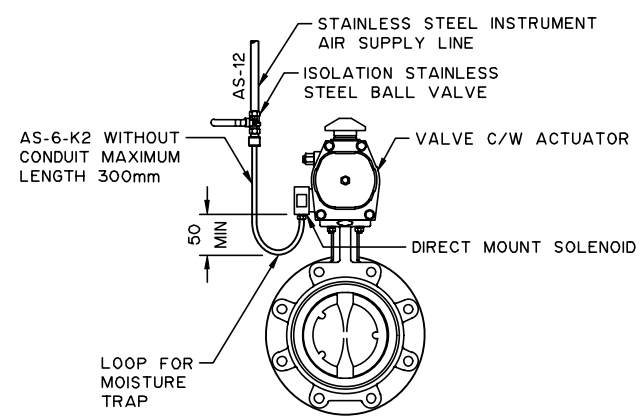

INSTRUMENT AIR CONNECTION TO PNEUMATIC FIELD DEVICES

24 -- NTS

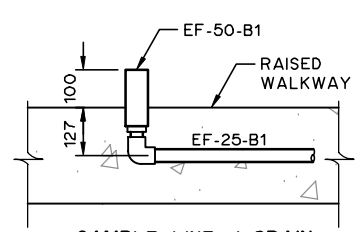

SAMPLE LINE / DRAIN

25 -- NTS

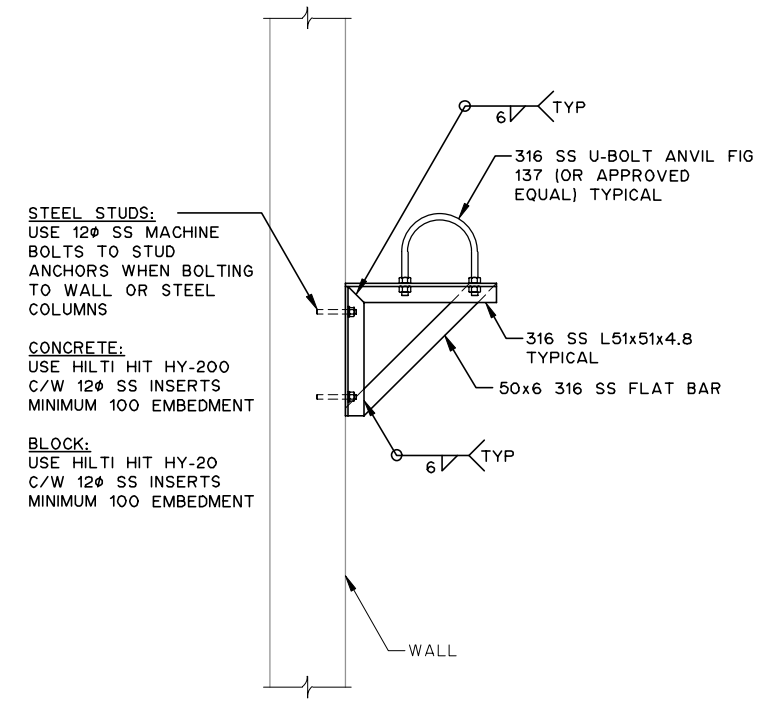

TYPICAL PIPE WALL SUPPORT DETAIL

26 -- NTS

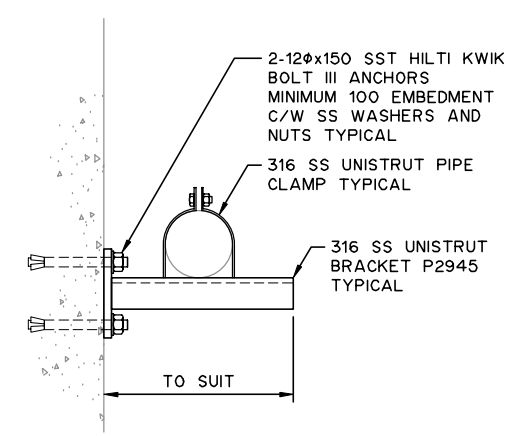

TYPICAL UNISTRUT PIPE SUPPORT

27 -- NTS

NOTES:

1. FOR INFORMATION REGARDING GENERAL NOTES, UTILITIES, ABBREVIATIONS AND SYMBOLS, REFER TO THE LEGEND DRAWINGS.

THIS DRAWING MAY HAVE BEEN MODIFIED FROM ITS ORIGINAL SIZE. ALL SCALE NOTATIONS INDICATED ARE BASED ON 11"x17" FORMAT DRAWINGS

ISSUE	YY-MM-DD	REVISION
2	21-01-15	FOR CONSTRUCTION
1	20-10-15	FOR TENDER

Association of Professional Engineers & Geoscientists of Saskatchewan
CERTIFICATE OF AUTHORIZATION
MPE Engineering Ltd.
Number C1334
Permission to Consult held by:

Discipline	Sk. Reg. No.	Signature
CIVIL	52866	

PROFESSIONAL ENGINEER KAGORO MEMBER 52866 2021-01-18 YR. MN. DAY SASKATCHEWAN

MPE Engineering Ltd.

ENGLISH RIVER ENTERPRISES PROPERTY MANAGEMENT LP

WASTEWATER TREATMENT PLANT

PROCESS PIPING

TYPICAL DETAILS SHEET 3

DESIGNED	I.K.	JOB	7603-002-00
DRAWN	L.J.S.	SCALE	NTS
DATE	NOVEMBER 2020	DRAWING	P5.3

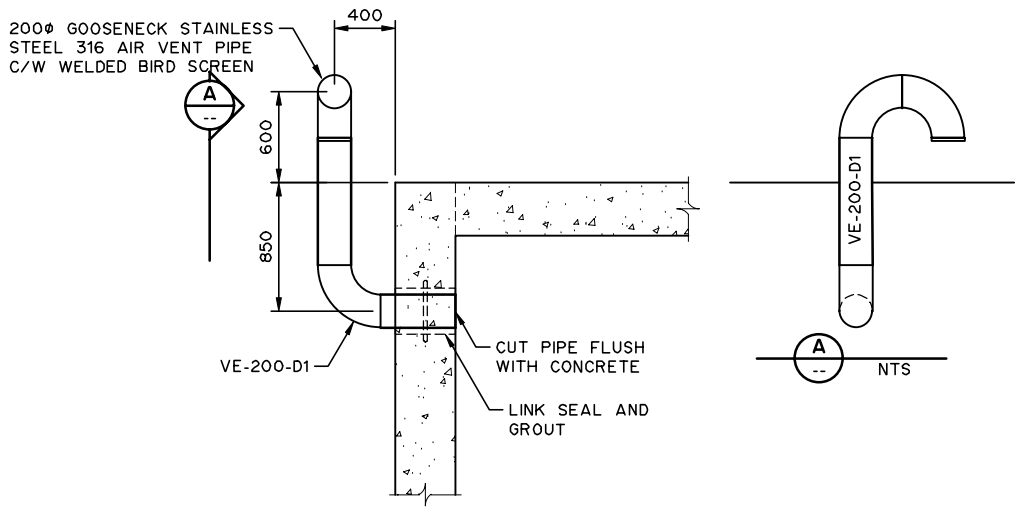

CORED RESERVOIR VENT DETAIL WALL PENETRATION

28 -- NTS

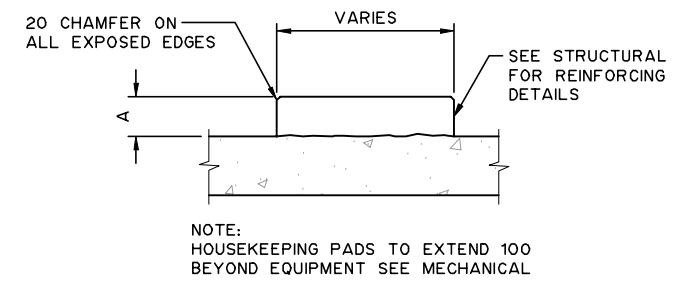

TYPICAL EQUIPMENT PAD

30 -- 1:50

SEE NOTE 4

EQUIPMENT	PAD HEIGHT (A)
TWAS BLOWER	300
BIOREACTOR BLOWERS	300
MEMBRANE BLOWERS	148
PERMEATE TANK	100
PERMEATE PUMP SKIDS	100
RAS PUMPS	100
AIR COMPRESSOR	100
UVR	825

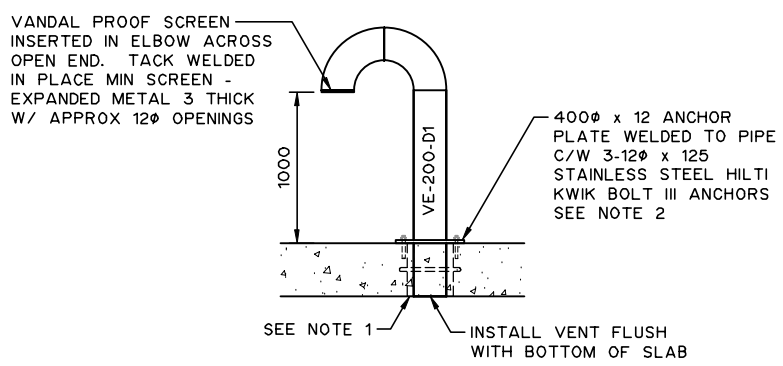

NOTES:
1. CONTRACTOR TO CORE HOLE FOR PENETRATIONS. CONTRACTOR TO USE LINK SEAL AND GROUT AS PER CONTRACT SPECIFICATIONS.
2. ENSURE JOINT BETWEEN PLATE AND CONCRETE IS WATER TIGHT. PROVIDE GASKETS AS REQUIRED.

CORED RESERVOIR VENT DETAIL SLAB PENETRATION

29 -- NTS

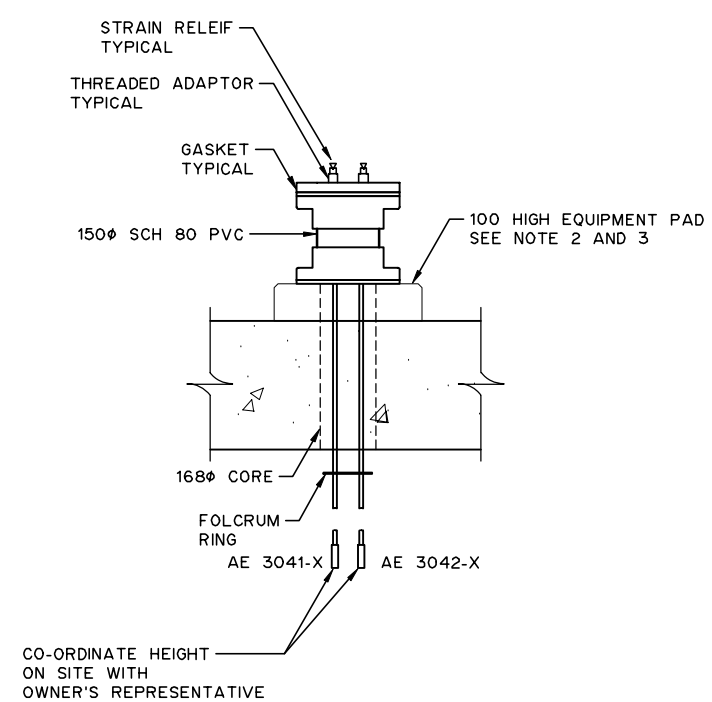

PH AND DISSOLVED OXYGEN INSTRUMENTS

31 P4.3 NTS

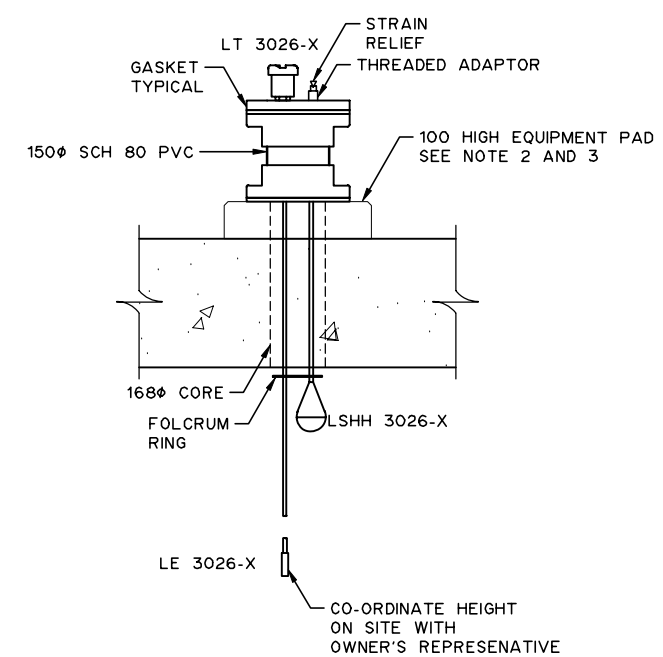

LSHH AND LT INSTRUMENTS

32 P4.3 NTS

NOTES:
1. FOR INFORMATION REGARDING GENERAL NOTES, UTILITIES, ABBREVIATIONS AND SYMBOLS, REFER TO THE LEGEND DRAWINGS.
2. 20 CHAMFER ALL EXPOSED CONCRETE EDGES TYPICAL.
3. HOUSEKEEPING PADS TO EXTEND 100 BEYOND EQUIPMENT. COORDINATE WITH SUPPLIER.
4. CONTRACTOR IS RESPONSIBLE FOR CONFIRMING HEIGHT OF PAD WITH EQUIPMENT SUPPLIERS PRIOR TO INSTALLATION.

THIS DRAWING MAY HAVE BEEN MODIFIED FROM ITS ORIGINAL SIZE. ALL SCALE NOTATIONS INDICATED ARE BASED ON 11"x17" FORMAT DRAWINGS

ISSUE	YY-MM-DD	REVISION
2	21-01-15	FOR CONSTRUCTION
1	20-10-15	FOR TENDER

Association of Professional Engineers & Geoscientists of Saskatchewan
CERTIFICATE OF AUTHORIZATION
MPE Engineering Ltd.
Number C1334
Permission to Consult held by:

Discipline	Sk. Reg. No.	Signature
CIVIL	52866	

PROFESSIONAL ENGINEER — I. KASORO — MEMBER 52866 — 2021-01-18 YR. MN. DAY — SASKATCHEWAN

MPE Engineering Ltd.

ENGLISH RIVER ENTERPRISES PROPERTY MANAGEMENT LP

WASTEWATER TREATMENT PLANT
PROCESS PIPING
TYPICAL DETAILS SHEET 4

DESIGNED	I.K.	JOB	7603-002-00
DRAWN	L.J.S.	SCALE	NTS
DATE	NOVEMBER 2020	DRAWING	P5.4

DISTRIBUTION

- CONDUIT IDENTIFICATION TAG
- LIGHTING/POWER PANEL
- DATA PANEL
- INTERCOM PANEL
- FIRE ANNUNCIATOR PANEL
- GROUND BAR
- PLYWOOD BACKBOARD
- EXTERIOR TRANSFORMER
- DRY TYPE TRANSFORMER
- METERING CABINET GREATER THAN 200A
- UTILITY METER PLAN
- POWER METER
- ELECTRIC UTILITY METER 200A AND LESS
- WATER METER
- GAS METER
- SPLITTER
- ELECTRICAL CENTRAL DISTRIBUTION PANEL (CDP)
- ELECTRICAL MOTOR CONTROL CENTRE (MCC)
- ELECTRICAL MAIN DISTRIBUTION BOARD
- TRANSFER SWITCH WITH BY-PASS
- TRANSFER SWITCH
- LVT 120/24V LOW VOLTAGE TRANSFORMER
- WEATHER HEAD

LIGHTING

- SURFACE MOUNTED LIGHT FIXTURE
- RECESSED LIGHT FIXTURE
- RECESSED LIGHT FIXTURE WITH END PLATES
- SURFACE MOUNTED STRIP LIGHT FIXTURE
- CEILING LIGHT FIXTURE
- UNDER CABINET/VALENCE STRIP LIGHT FIXTURE
- WALL MOUNTED CUBED LIGHT FIXTURE
- SURFACE MOUNTED LIGHT FIXTURE
- RECESSED LIGHT FIXTURE
- WALL MOUNTED LIGHT FIXTURE
- EM WALL MOUNTED LIGHT FIXTURE ON EMERGENCY
- TRACK LIGHT C/W PENDANT HEADS
- TRACK LIGHT C/W ADJUSTABLE HEADS
- BOLLARD LIGHT FIXTURE
- POLE MOUNTED LIGHT FIXTURE (ONE HEAD SHOWN)
- WALL MOUNTED HID LIGHT FIXTURE

POWER

- DUPLEX RECEPTACLE
- SPLIT FEED RECEPTACLE
- FOURPLEX RECEPTACLE
- SWITCHED DUPLEX RECEPTACLE
- 20A T-SLOT RECEPTACLE (KITCHEN)
- TWISTLOCK RECEPTACLE
- 208 VOLT 1PH RECEPTACLE
- 208 VOLT 3PH RECEPTACLE
- WALL MOUNTED USB PORT
- PEDESTAL DUPLEX RECEPTACLE
- SB - WALL MOUNTED MULTI-GANG BOX
- WALL MOUNTED PUSH BUTTON
- SPD WALL MOUNTED SURGE PROTECTIVE DEVICE (SPD OR TVSS)
- VFD WALL MOUNTED VARIABLE FREQUENCY DRIVE (VFD)
- CEILING MOUNTED DUPLEX RECEPTACLE
- CEILING MOUNTED FOURPLEX RECEPTACLE
- CEILING MOUNTED 208 VOLT 1PH RECEPTACLE
- CEILING MOUNTED 208 VOLT 3PH RECEPTACLE
- R AUXILIARY RELAY
- P CEILING MOUNTED POWER ZONE BOX
- REEL DOWN RECEPTACLE
- PACK POLE
- No. FLOOR MOUNTED DUPLEX RECEPTACLE (No. of OUTLETS)
- No. FLOOR MOUNTED FOURPLEX RECEPTACLE (No. of OUTLETS)
- No. FLOOR MOUNTED 208 VOLT 1PH RECEPTACLE
- No. FLOOR MOUNTED 208 VOLT 3PH RECEPTACLE
- SB - FLOOR MOUNTED MULTI-GANG BOX
- MOTOR
- MOTOR WITH DISCONNECT SWITCH
- MOTOR WITH FUSIBLE DISCONNECT SWITCH
- MOTOR WITH COMBINATION DISCONNECT SWITCH

POWER CONTINUED

- MAGNETIC MOTOR STARTER
- HOME RUN WITH WIRE COUNT
- WAP WIRELESS ACCESS POINT
- ELECTRICAL HEATING
- HEAT TRACING
- PIN AND SLEEVE CONNECTOR (FEMALE)
- PIN AND SLEEVE CONNECTOR (MALE)

SWITCHES AND JUNCTIONS BOXES

- LINE VOLTAGE SWITCH
- P SWITCH C/W PILOT LIGHT
- 2 TWO POLE SWITCH
- 3 THREE WAY SWITCH
- 4 FOUR WAY SWITCH
- M MANUAL MOTOR PROTECTION SWITCH C/W PILOT LIGHT
- K KEY OPERATED SWITCH - CYLINDER TYPE
- T TIMER SWITCH
- D DIMMER SWITCH - SLIDER TYPE
- L INTERNALLY ILLUMINATED LIGHT SWITCH
- R LOW VOLTAGE SWITCH
- 2 GANG SWITCH
- 3 GANG SWITCH
- 4 GANG SWITCH
- 5 GANG SWITCH
- WALL MOUNTED PHOTOCELL
- WALL MOUNTED JUNCTION BOX
- FLOOR MOUNTED JUNCTION BOX
- J SQUARE CEILING MOUNTED JUNCTION BOX
- T THERMOSTAT
- NON-FUSEABLE DISCONNECT SWITCH
- FUSEABLE DISCONNECT SWITCH
- COMBINATION MAGNETIC HOA STARTER
- O/H DOOR PUSH BUTTON
- PB PULL BOX

LIFE SAFETY

- CEILING MOUNTED EXIT LIGHT SINGLE FACE
- CEILING MOUNTED EXIT LIGHT DOUBLE FACE
- CEILING COMBINATION EXIT SIGN AND EMERGENCY LIGHT C/W BATTERY
- WALL MOUNTED EXIT LIGHT SINGLE FACE
- WALL MOUNTED EXIT LIGHT DOUBLE FACE
- WALL COMBINATION EXIT SIGN AND EMERGENCY LIGHT C/W BATTERY
- EXIT LIGHT DIRECTIONAL ARROW
- WALL MOUNTED EMERGENCY LIGHTING BATTERY PACK
- CEILING MOUNTED EMERGENCY LIGHTING DOUBLE REMOTE HEAD
- CEILING MOUNTED EMERGENCY LIGHTING RECESSED REMOTE HEAD
- WALL MOUNTED EMERGENCY LIGHTING DOUBLE REMOTE HEAD
- SMOKE DETECTOR
- SMOKE ALARM - 120V

POWER EQUIPMENT

- DELTA WYE TRANSFORMER
- DISTRIBUTION TRANSFORMER
- POTENTIAL TRANSFORMER
- FUSE DRAW OUT TYPE
- CIRCUIT BREAKER DRAW OUT TYPE
- 3 PHASE GENERATOR (GROUNDED)
- THERMAL OVERLOAD PROTECTION
- I INTERLOCK
- CAPACITOR
- A CURRENT METER
- CONTACTOR
- FUSE
- DISCONNECT SWITCH
- FUSED DISCONNECT SWITCH
- XXX XXX XXX CIRCUIT BREAKER — FRAME SIZE, TRIP RATING, POLE
- ETM ELAPSED TIME METER

POWER EQUIPMENT CONTINUED

- GROUND ROD
- GROUND ROD C/W WELL
- GROUND ROD WITHOUT WELL
- GH GATE HOIST
- x kw HEATER C/W KILOWATT RATING
- XXX MOTOR CONTROL IDENTIFICATION TAG
- TRANSFER SWITCH

COMMUNICATIONS

- WALL MOUNTED TELEPHONE OUTLET
- WALL MOUNTED DATA OUTLET
- WALL MOUNTED COMBINATION TELEPHONE/DATA OUTLET
- WALL MOUNTED TELEVISION OUTLET
- WALL MOUNTED CHIME OR BUZZER
- CEILING MOUNTED TELEPHONE OUTLET
- CEILING MOUNTED COMBINATION TELEPHONE/DATA OUTLET
- CEILING MOUNTED TELEVISION OUTLET
- CEILING MOUNTED DATA OUTLET (No. OF OUTLETS)
- No. FLOOR MOUNTED DATA OUTLET (No. OF OUTLETS)
- No. FLOOR MOUNTED TELEPHONE OUTLET (No. OF OUTLETS)
- No. FLOOR MOUNTED TELEVISION OUTLET (No. OF OUTLETS)
- No. FLOOR MOUNTED COMBINATION TELEPHONE/DATA OUTLET (No. OF OUTLETS)
- RADIO LINK

CONTROL PANEL EQUIPMENT

- RESET PUSH BUTTON (NO)
- RESET PUSH BUTTON (NC)
- MUSHROOM HEAD STOP
- 3 POSITION SELECTOR SWITCH (H, A, O)
- 2 POSITION SELECTOR SWITCH (ON, OFF)
- HAND-OFF-AUTO SELECTOR SWITCH (H, A, O)
- UP-OFF-DOWN SELECTOR SWITCH (U, O, D)
- RESET PUSH BUTTON
- A AMBER PILOT LIGHT
- G GREEN PILOT LIGHT
- R RED PILOT LIGHT
- DUPLEX RECEPTACLE
- SINGLE PHASE PLUG
- MAIN CONTROL PANEL FUSED TERMINAL BLOCK
- AUXILIARY FUSED TERMINAL BLOCK
- CIRCUIT BREAKER
- MAIN CONTROL PANEL TERMINAL BLOCK
- PLC/RTU TERMINAL
- AUXILIARY TERMINAL BLOCK
- MCC/VFD TERMINAL BLOCK
- DEVICE TERMINAL BLOCK
- 1000 DRY CONTACT RELAY
- TDR 1000 TIME DELAY RELAY
- M MAGNETIC CONTACTOR
- SOLENOID
- DRY CONTACT RELAY (NC)
- DRY CONTACT RELAY (NO)
- VARIABLE RESISTOR
- RESISTOR
- TH THERMISTOR
- DIODE
- MOV METAL OXIDE VARISTOR

INSTRUMENTATION EQUIPMENT

- LEVEL SWITCH (OPEN ON RISING LEVEL)
- LEVEL SWITCH (OPEN ON FALLING LEVEL)
- FLOW SWITCH (OPEN ON RISING FLOW)
- FLOW SWITCH (OPEN ON FALLING FLOW)
- PRESSURE SWITCH (OPEN ON RISING PRESSURE)
- PRESSURE SWITCH (OPEN ON FALLING PRESSURE)
- TEMPERATURE SWITCH (OPEN ON RISING TEMPERATURE)
- TEMPERATURE SWITCH (OPEN ON FALLING TEMPERATURE)
- LIMIT SWITCH (NC)
- LIMIT SWITCH (NO)
- TIME DELAY RELAY (NC)
- TIME DELAY RELAY (NO)
- XXX XXX INSTRUMENTATION IDENTIFICATION TAG

PLC I/O

- PLC DI PLC/RTU DIGITAL INPUT
- PLC DO PLC/RTU DIGITAL OUTPUT
- PLC AI PLC/RTU ANALOG INPUT
- PLC AO PLC/RTU ANALOG OUTPUT

MISCELLANEOUS AND LABELS

- REVISION NUMBER
- FIXTURE TYPE
- MECHANICAL EQUIPMENT IDENTIFICATION TAG
- KITCHEN EQUIPMENT TAG
- KEY NOTES
- SINGLE LINE BREAK
- DOUBLE LINE BREAK
- CAPPED OFF LINE OR CONDUIT
- CONDUIT BREAK
- CABLE TRAY
- DW DISH WASHER
- F FRIDGE
- R RANGE
- M MICROWAVE
- G GARBURATOR
- D DRYER
- W WASHER
- NL NIGHT LIGHT
- TP TAMPER PROOF
- GFCI GROUND FAULT CIRCUIT INTERRUPTER
- IG ISOLATED GROUND
- EM EMERGENCY
- AF AMP FRAME
- AT AMP TRIP
- WP WEATHER PROOF
- XP EXPLOSION PROOF
- E EXISTING DEVICE TO REMAIN
- X EXISTING DEVICE TO BE REMOVED
- ER EXISTING DEVICE TO BE RELOCATED
- RD RELOCATED DEVICE
- WIRE COUNT
- CONDUIT RUN UP
- CONDUIT RUN DOWN
- OH OVERHEAD POWER
- UG UNDERGROUND POWER
- CONDUCTOR/CONDUIT
- UNDERGROUND CONDUCTOR/CONDUIT
- FLEXIBLE CONDUIT
- EXISTING EQUIPMENT
- NEW EQUIPMENT
- EQUIPMENT TO BE REMOVED

OCCUPANCY SENSORS

- P WALL MOUNTED PASSIVE INFRARED OCCUPANCY SENSOR
- U WALL MOUNTED ULTRA SONIC OCCUPANCY SENSOR
- C WALL MOUNTED PASSIVE INFRARED/ULTRASONIC OCCUPANCY SENSOR

NOTES:

1. FOR INFORMATION REGARDING GENERAL NOTES, UTILITIES, ABBREVIATIONS AND SYMBOLS, REFER TO THE LEGEND DRAWINGS.

THIS DRAWING MAY HAVE BEEN MODIFIED FROM ITS ORIGINAL SIZE. ALL SCALE NOTATIONS INDICATED ARE BASED ON 11"x17" FORMAT DRAWINGS

ISSUE	YY-MM-DD	REVISION
2	21-01-15	FOR CONSTRUCTION
1	20-10-15	FOR TENDER

Association of Professional Engineers & Geoscientists of Saskatchewan
CERTIFICATE OF AUTHORIZATION
MPE Engineering Ltd.
Number C1334
Permission to Consult held by:

Discipline	Sk. Reg. No.	Signature
ELECTRICAL	32675	

PROFESSIONAL ENGINEER — R.G. OFFIE — MEMBER 32675 — 2021-01-22 (YR. MN. DAY) — SASKATCHEWAN

MPE Engineering Ltd.

ENGLISH RIVER ENTERPRISES
PROPERTY MANAGEMENT LP

WASTEWATER TREATMENT PLANT
ELECTRICAL
ELECTRICAL LEGEND

DESIGNED	R.G.O.	JOB	7603-002-00
DRAWN	T.S.	SCALE	N.T.S.
DATE	NOVEMBER 2020	DRAWING	E0.1

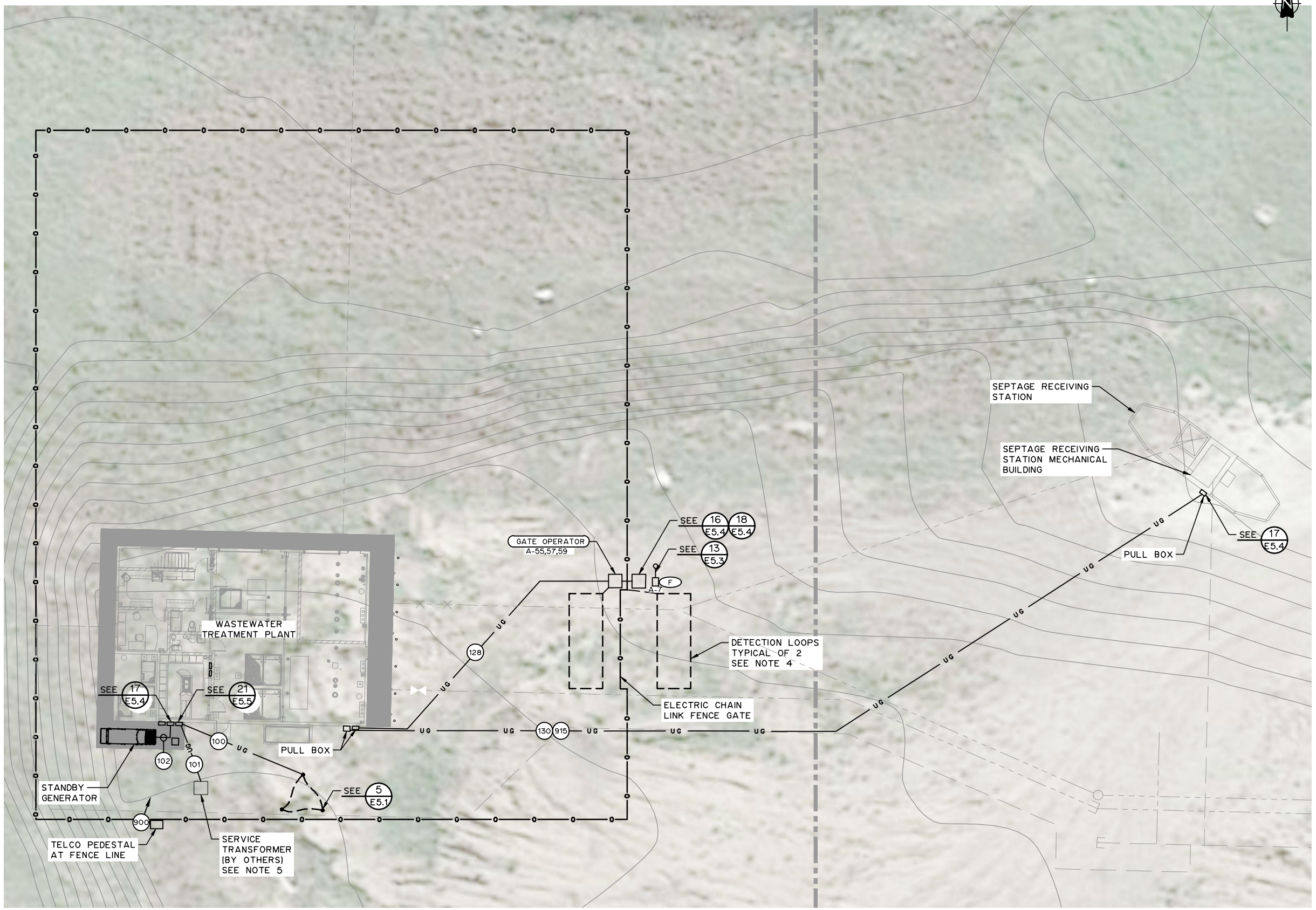

NOTES:

1. FOR INFORMATION REGARDING GENERAL NOTES, UTILITIES, ABBREVIATIONS AND SYMBOLS, REFER TO THE LEGEND DRAWINGS.
2. (---) SEE CONDUIT AND CABLE SCHEDULES ON E-DRAWING SERIES.
3. (-) SEE LUMINAIRE SCHEDULE.
4. DETECTION LOOP AND GATE OPERATOR SUPPLIED BY GATE MANUFACTURER. ELECTRICAL CONTRACTOR TO PROVIDE AND INSTALL ALL WIRING, CONDUIT AND LOCAL WEATHERPROOF DISCONNECT.
5. CONTRACTOR TO COORDINATE AND CONFORM TO ELECTRIC UTILITY REQUIREMENTS FOR NEW SERVICE INSTALLATION.

THIS DRAWING MAY HAVE BEEN MODIFIED FROM ITS ORIGINAL SIZE. ALL SCALE NOTATIONS INDICATED ARE BASED ON 11"x17" FORMAT DRAWINGS

ISSUE	YY-MM-DD	REVISION
2	21-01-15	FOR CONSTRUCTION
1	20-10-15	FOR TENDER

Association of Professional Engineers & Geoscientists of Saskatchewan
CERTIFICATE OF AUTHORIZATION
MPE Engineering Ltd.
Number C1334
Permission to Consult held by:

Discipline	Sk. Reg. No.	Signature
ELECTRICAL	32675	

PROFESSIONAL ENGINEER
R.G. OFSTIE
MEMBER 32675
2021-01-22
YR. MN. DAY
SASKATCHEWAN

MPE Engineering Ltd.

ENGLISH RIVER ENTERPRISES PROPERTY MANAGEMENT LP

WASTEWATER TREATMENT PLANT

ELECTRICAL
SITE PLAN

DESIGNED	R.G.O.	JOB	7603-002-00
DRAWN	T.S.	SCALE	1:300
DATE	NOVEMBER 2020	DRAWING	E0.2

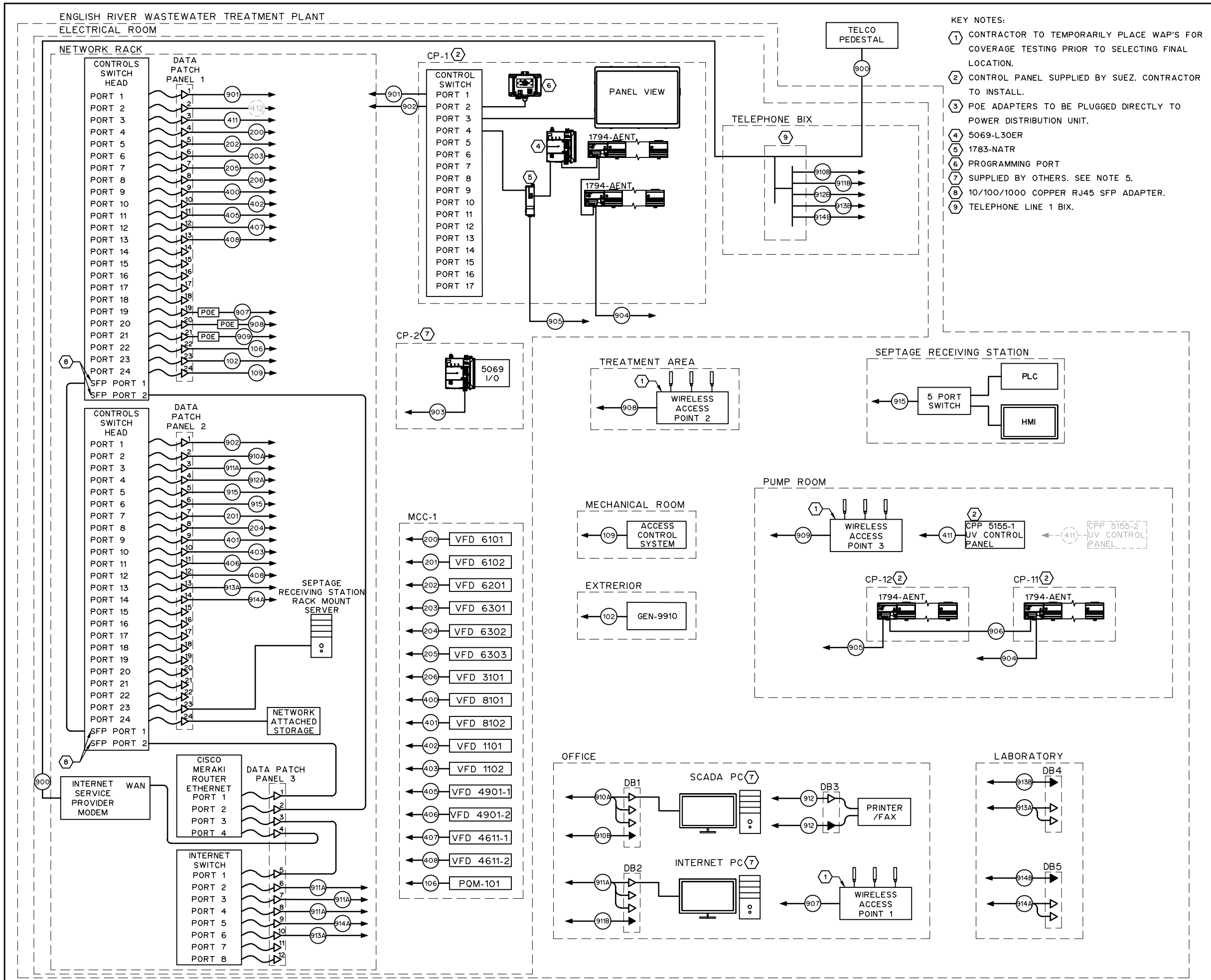

KEY NOTES:

1. CONTRACTOR TO TEMPORARILY PLACE WAP'S FOR COVERAGE TESTING PRIOR TO SELECTING FINAL LOCATION.
2. CONTROL PANEL SUPPLIED BY SUEZ. CONTRACTOR TO INSTALL.
3. POE ADAPTERS TO BE PLUGGED DIRECTLY TO POWER DISTRIBUTION UNIT.
4. 5069-L30ER
5. 1783-NATR
6. PROGRAMMING PORT
7. SUPPLIED BY OTHERS. SEE NOTE 5.
8. 10/100/1000 COPPER RJ45 SFP ADAPTER.
9. TELEPHONE LINE 1 BIX.

NOTES:

1. FOR INFORMATION REGARDING GENERAL NOTES, UTILITIES, ABBREVIATIONS AND SYMBOLS, REFER TO THE LEGEND DRAWINGS.
2. (--) SEE CONDUIT AND CABLE SCHEDULES ON E-DRAWINGS SERIES.
3. POE = POWER OVER ETHERNET
   DB = DEVICE BOX
4. ALL CABLES TO BE CAT6 UNLESS OTHERWISE NOTED.
5. CP-2 TO BE PROVIDED BY OTHERS. CONTRACTOR TO INSTALL CONTROL PANEL AND TERMINATE DEVICES ACCORDING TO PID P1.x SERIES DRAWINGS AND PANEL DRAWINGS. PANEL DRAWINGS TO BE PROVIDED AT TIME OF CONSTRUCTION.
6. ALL CONTROL NETWORK KEYSTONE PORTS TO BE COLOR CODED RED.
7. ALL INTERNET NETWORK KEYSTONE PORTS TO BE COLOR CODED BLUE.
8. ALL TELEPHONE KEYSTONE PORTS TO BE COLOR CODED WHITE.

THIS DRAWING MAY HAVE BEEN MODIFIED FROM ITS ORIGINAL SIZE. ALL SCALE NOTATIONS INDICATED ARE BASED ON 11"x17" FORMAT DRAWINGS

ISSUE	YY-MM-DD	REVISION
2	21-01-15	FOR CONSTRUCTION
1	20-10-15	FOR TENDER

Association of Professional Engineers & Geoscientists of Saskatchewan
CERTIFICATE OF AUTHORIZATION
MPE Engineering Ltd.
Number C1334
Permission to Consult held by:

Discipline	Sk. Reg. No.	Signature
ELECTRICAL	32675	

PROFESSIONAL ENGINEER
R.G. DESTIE
MEMBER 32675
2021-01-22
YR. MN. DAY.
SASKATCHEWAN

MPE Engineering Ltd.

ENGLISH RIVER ENTERPRISES
PROPERTY MANAGEMENT LP

WASTEWATER TREATMENT PLANT
ELECTRICAL
COMMUNICATION AND CONTROL

DESIGNED	R.G.O.	JOB	7603-002-00
DRAWN	T.S.	SCALE	N.T.S.
DATE	NOVEMBER 2020	DRAWING	E0.3

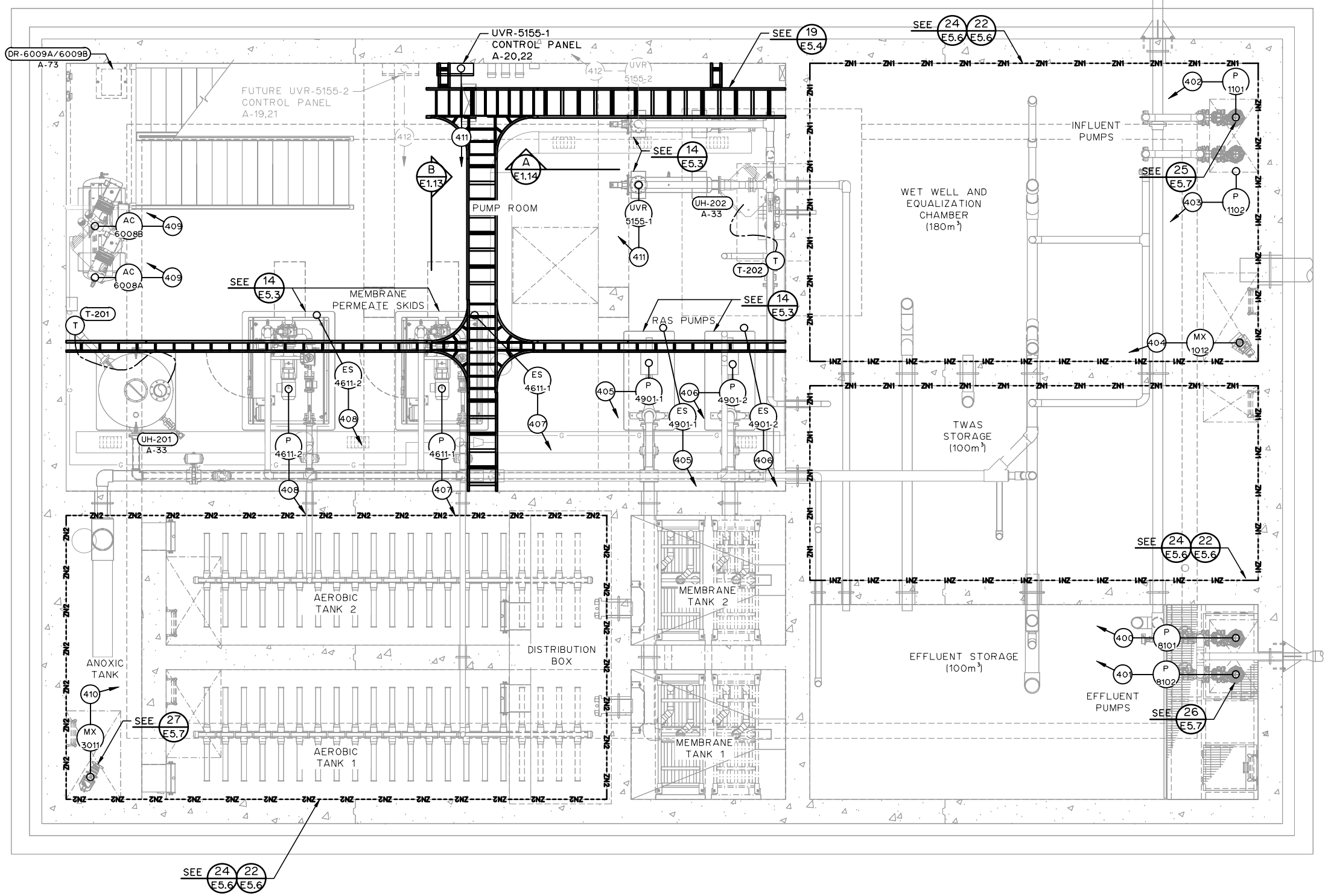

NOTES:

1. FOR INFORMATION REGARDING GENERAL NOTES, UTILITIES, ABBREVIATIONS AND SYMBOLS, REFER TO THE LEGEND DRAWINGS.
2. (--) SEE CONDUIT AND CABLE SCHEDULES ON E-DRAWINGS SERIES.

LEGEND:

1. ——ZN2——ZN2—— ZONE 2 CATEGORY 2
2. ——ZN1——ZN1—— ZONE 1 CATEGORY 1

THIS DRAWING MAY HAVE BEEN MODIFIED FROM ITS ORIGINAL SIZE. ALL SCALE NOTATIONS INDICATED ARE BASED ON 11"x17" FORMAT DRAWINGS

ISSUE	YY-MM-DD	REVISION
2	21-01-15	FOR CONSTRUCTION
1	20-10-15	FOR TENDER

Association of Professional Engineers & Geoscientists of Saskatchewan
CERTIFICATE OF AUTHORIZATION
MPE Engineering Ltd.
Number C1334
Permission to Consult held by:

Discipline	Sk. Reg. No.	Signature
ELECTRICAL	32675	

PROFESSIONAL ENGINEER
R.G. OFSTIE
MEMBER 32675
2021-01-22
YR. MN. DAY.
SASKATCHEWAN

MPE Engineering Ltd.

ENGLISH RIVER ENTERPRISES
PROPERTY MANAGEMENT LP

WASTEWATER TREATMENT PLANT
ELECTRICAL
ELECTRICAL LOWER LEVEL PLAN

DESIGNED	R.G.O	JOB	7603-002-00
DRAWN	T.S.	SCALE	1:75
DATE	NOVEMBER 2020	DRAWING	E1.1

KEY NOTES:

(14) CABLE TRAY TO EXIT ELECTRICAL ROOM CEILING. TRAY NORTH OF ELECTRICAL ROOM TO BE RUN ABOVE MEZZANINE.

(15) NEMA 3R ENCLOSURE.

LEGEND:

1. ——ZN2——ZN2—— ZONE 2 CATEGORY 2
2. ——ZN1——ZN1—— ZONE 1 CATEGORY 1

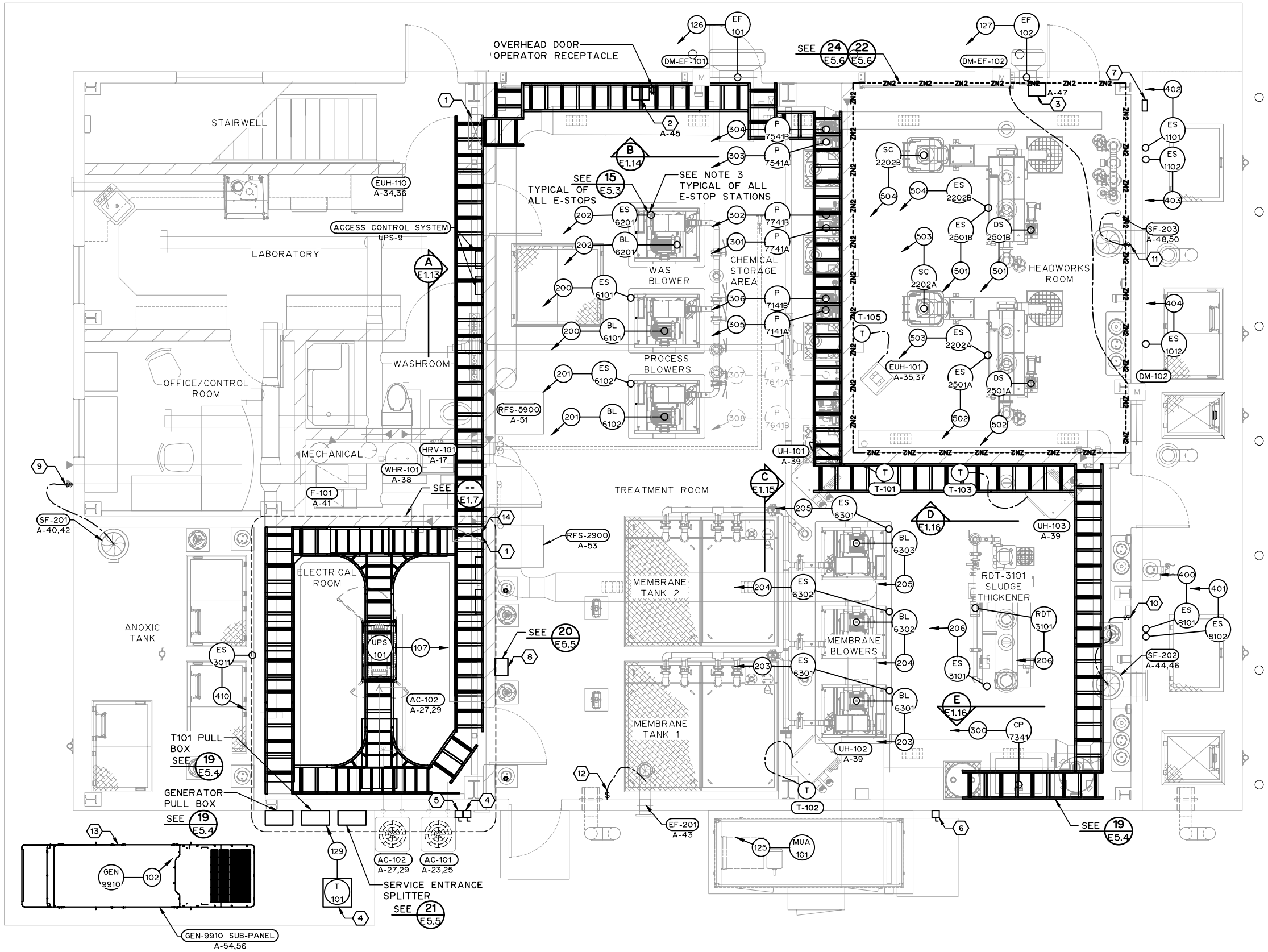

NOTES:

1. FOR INFORMATION REGARDING GENERAL NOTES, UTILITIES, ABBREVIATIONS AND SYMBOLS, REFER TO THE LEGEND DRAWINGS.
2. (--) SEE CONDUIT AND CABLE SCHEDULES ON E-DRAWINGS SERIES.
3. MOUNT IN EASILY ACCESSED LOCATION ON CONTROLLED EQUIPMENT OR WITHIN 1000 OF CONTROLLED EQUIPMENT.

KEY NOTES:

(1) CONTRACTOR TO FIRE STOP PENETRATION USING ROXTEC MULTI-TRANSIT CABLE GLAND SYSTEM COMPLETE WITH AT LEAST 10% SPARE CAPACITY FOR FUTURE CABLE RUNS OF EACH SIZE.

(2) OVERHEAD DOOR OPERATOR C/W THREE BUTTON CONTROL STATION.

(3) HEADWORKS OVERHEAD DOOR OPERATOR C/W THREE BUTTON CONTROL STATION. TO BE RATED ZONE 2.

(4) AC 101 NEMA 4X LOCKABLE OUTDOOR DISCONNECT.

(5) AC 102 NEMA 4X LOCKABLE OUTDOOR DISCONNECT.

(6) MUA 101 NEMA 4X LOCKABLE OUTDOOR DISCONNECT.

(7) EF 102 LOCAL CONTROL STATION.

(8) EH 4601 HOIST CONTROL PANEL AND DISCONNECT.

(9) MOTOR STARTING RATED SWITCH FOR SF 201.

(10) MOTOR STARTING RATED SWITCH FOR SF 202.

(11) MOTOR STARTING RATED SWITCH FOR SF 203.

(12) MOTOR STARTING RATED SWITCH FOR EF 201.

(13) PROVIDE STEEL SPRING VIBRATION ISOLATORS BETWEEN THE RAIL BASE AND SUB-BASE FUEL TANK.

THIS DRAWING MAY HAVE BEEN MODIFIED FROM ITS ORIGINAL SIZE. ALL SCALE NOTATIONS INDICATED ARE BASED ON 11"x17" FORMAT DRAWINGS

ISSUE	YY-MM-DD	REVISION
2	21-01-15	FOR CONSTRUCTION
1	20-10-15	FOR TENDER

Association of Professional Engineers & Geoscientists of Saskatchewan
CERTIFICATE OF AUTHORIZATION
MPE Engineering Ltd.
Number C1334
Permission to Consult held by:

Discipline	Sk. Reg. No.	Signature
ELECTRICAL	32675	

PROFESSIONAL ENGINEER
R.G. OFSTIE
MEMBER 32675
2021-01-22
YR. MN. DAY.
SASKATCHEWAN

MPE Engineering Ltd.

ENGLISH RIVER ENTERPRISES PROPERTY MANAGEMENT LP

WASTEWATER TREATMENT PLANT

ELECTRICAL

ELECTRICAL MAIN FLOOR PLAN

DESIGNED	R.G.O.	JOB	7603-002-00
DRAWN	T.S.	SCALE	1:75
DATE	NOVEMBER 2020	DRAWING	E1.2

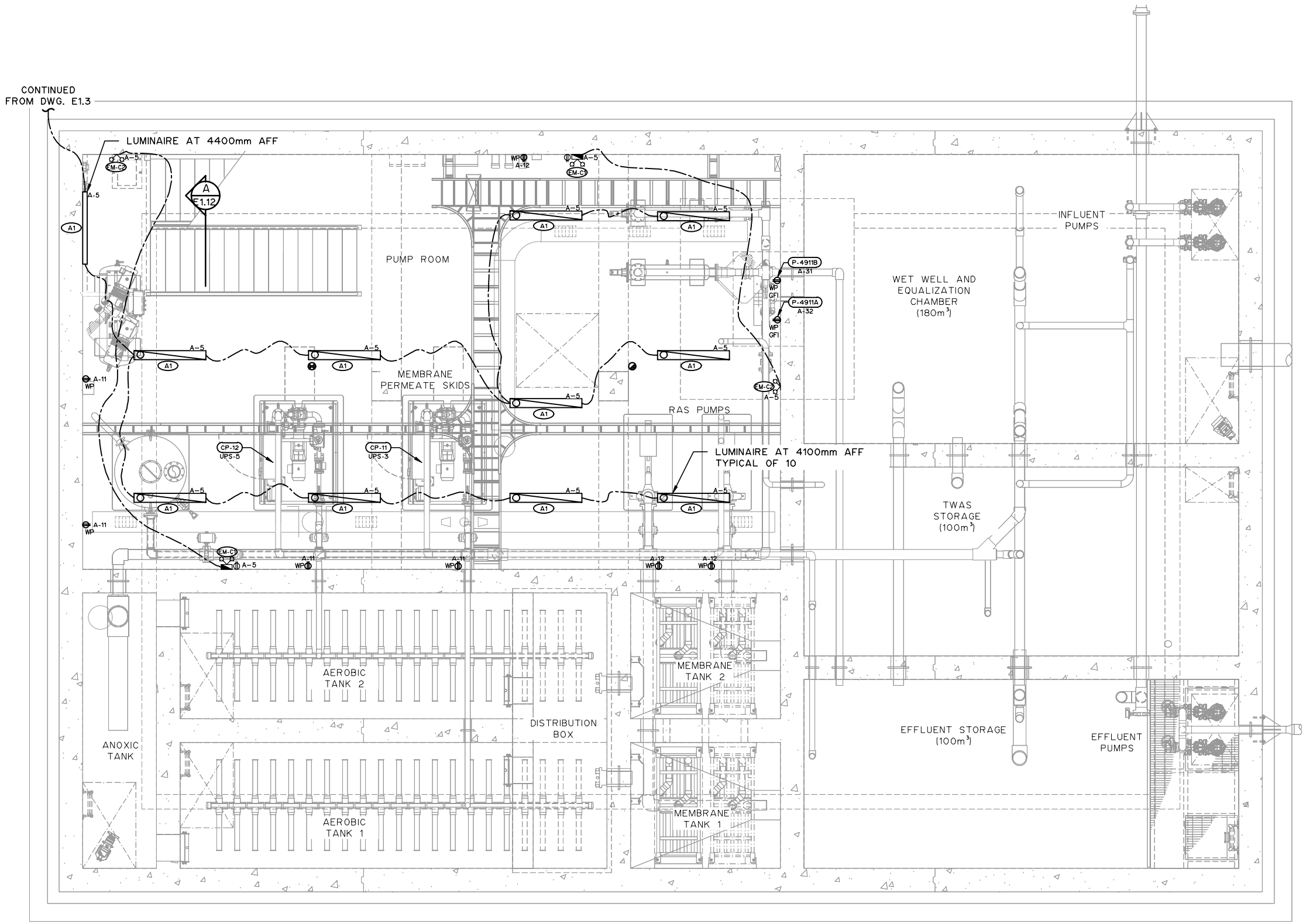

NOTES:

1. FOR INFORMATION REGARDING GENERAL NOTES, UTILITIES, ABBREVIATIONS AND SYMBOLS, REFER TO THE LEGEND DRAWINGS.

THIS DRAWING MAY HAVE BEEN MODIFIED FROM ITS ORIGINAL SIZE. ALL SCALE NOTATIONS INDICATED ARE BASED ON 11"x17" FORMAT DRAWINGS

ISSUE	YY-MM-DD	REVISION
2	21-01-15	FOR CONSTRUCTION
1	20-10-15	FOR TENDER

Association of Professional Engineers & Geoscientists of Saskatchewan
CERTIFICATE OF AUTHORIZATION
MPE Engineering Ltd.
Number C1334
Permission to Consult held by:

Discipline	Sk. Reg. No.	Signature
ELECTRICAL	32675	

PROFESSIONAL ENGINEER
R.G. OSTIE
MEMBER 32675
2021-01-22
YR. MN. DAY.
SASKATCHEWAN

MPE Engineering Ltd.

ENGLISH RIVER ENTERPRISES PROPERTY MANAGEMENT LP

WASTEWATER TREATMENT PLANT
ELECTRICAL
LIGHTING AND RECEPTACLE LOWER LEVEL PLAN

DESIGNED	R.G.O.	JOB	7603-002-00
DRAWN	T.S.	SCALE	N.T.S.
DATE	NOVEMBER 2020	DRAWING	E1.3

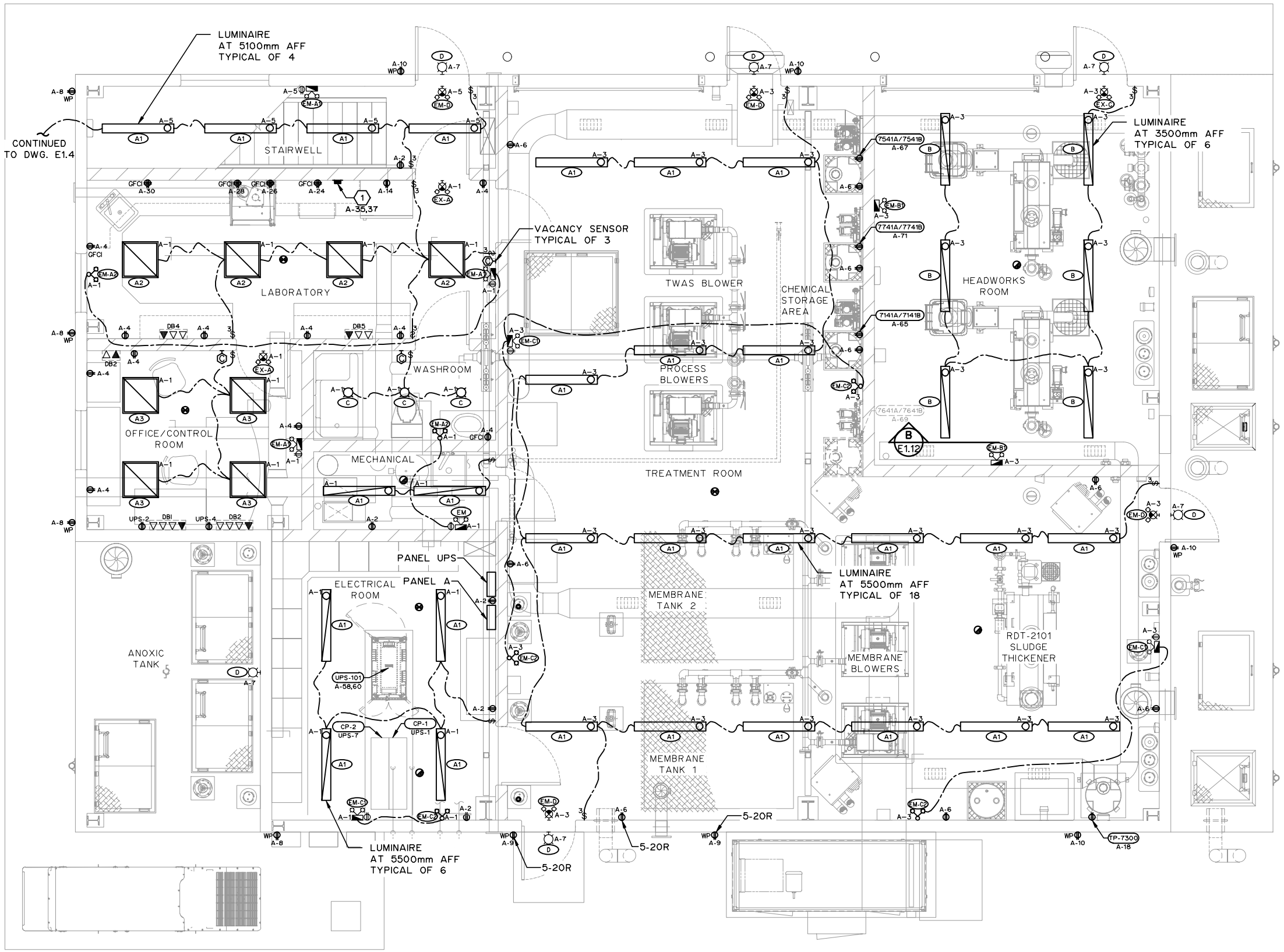

NOTES:

1. FOR INFORMATION REGARDING GENERAL NOTES, UTILITIES, ABBREVIATIONS AND SYMBOLS, REFER TO THE LEGEND DRAWINGS.
2. SEE ARCHITECTURAL MILLWORK ELEVATION DRAWINGS FOR LOCATION OF LABORATORY AND CONTROL ROOM RECEPTACLE LOCATIONS.
3. RECEPTACLES AND DATA PORTS IN LABORATORY TO BE INTEGRATED INTO MILLWORK. CONCEAL CONDUIT WITHIN MILLWORK WHERE POSSIBLE. CONTRACTOR TO COORDINATE RECEPTACLE BOX CUTOUTS WITH MILLWORK.

KEY NOTES:

(1) DISHWASHER JUNCTION BOX TO BE INTERNAL TO MILLWORK.

LEGEND:

1. DBx = DEVICE BOX REFER TO COMMUNICATION ARCHITECTURE DRAWING FOR DETAILS.

THIS DRAWING MAY HAVE BEEN MODIFIED FROM ITS ORIGINAL SIZE. ALL SCALE NOTATIONS INDICATED ARE BASED ON 11"x17" FORMAT DRAWINGS

ISSUE	YY-MM-DD	REVISION
2	21-01-15	FOR CONSTRUCTION
1	20-10-15	FOR TENDER

Association of Professional Engineers & Geoscientists of Saskatchewan
CERTIFICATE OF AUTHORIZATION
MPE Engineering Ltd.
Number C1334
Permission to Consult held by:

Discipline	Sk. Reg. No.	Signature
ELECTRICAL	32675	

PROFESSIONAL ENGINEER
R.G. OESTE
MEMBER 32675
2021-01-22
YR. MN. DAY
SASKATCHEWAN

MPE Engineering Ltd.

ENGLISH RIVER ENTERPRISES PROPERTY MANAGEMENT LP

WASTEWATER TREATMENT PLANT
ELECTRICAL
LIGHTING AND RECEPTACLE MAIN FLOOR PLAN

DESIGNED	R.G.O.	JOB	7603-002-00
DRAWN	T.S.	SCALE	N.T.S.
DATE	NOVEMBER 2020	DRAWING	E1.4

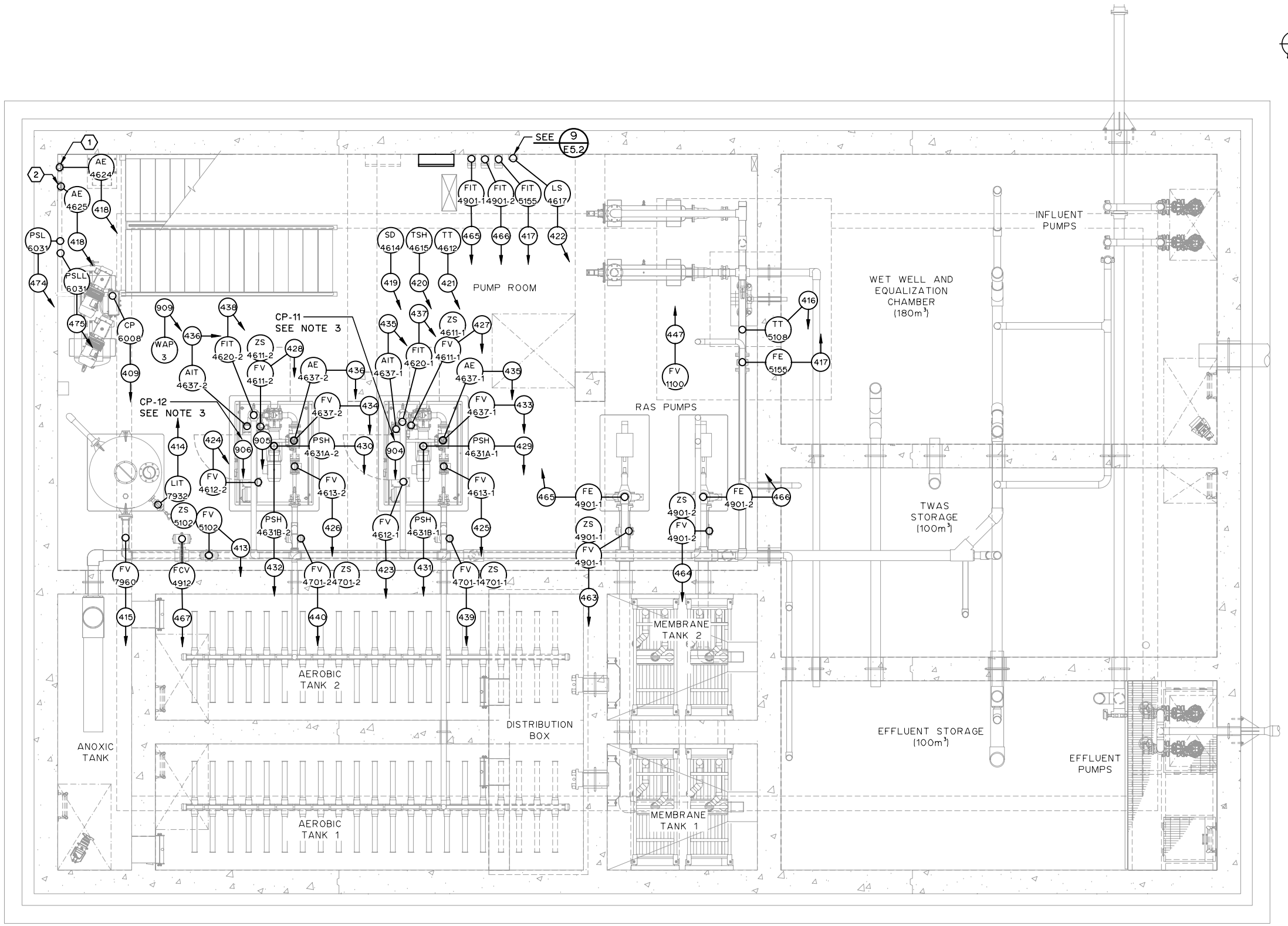

NOTES:

1. FOR INFORMATION REGARDING GENERAL NOTES, UTILITIES, ABBREVIATIONS AND SYMBOLS, REFER TO THE LEGEND DRAWINGS.
2. (--) SEE CONDUIT AND CABLE SCHEDULES ON E-DRAWINGS SERIES.
3. CP-11 AND CP-12 TO BE PROVIDED BY SUEZ. CONTRACTOR TO INSTALL CONTROL PANEL AND TERMINATE DEVICES ACCORDING TO PID P1.X SERIES DRAWINGS AND PANEL DRAWINGS.

KEY NOTES:

(1) METHANE SENSOR TO BE MOUNTED 200 FROM CEILING.

(2) H2S SENSOR TO BE MOUNTED 50 AFF.

THIS DRAWING MAY HAVE BEEN MODIFIED FROM ITS ORIGINAL SIZE. ALL SCALE NOTATIONS INDICATED ARE BASED ON 11"x17" FORMAT DRAWINGS

ISSUE	YY-MM-DD	REVISION
2	21-01-15	FOR CONSTRUCTION
1	20-10-15	FOR TENDER

Association of Professional Engineers & Geoscientists of Saskatchewan
CERTIFICATE OF AUTHORIZATION
MPE Engineering Ltd.
Number C1334
Permission to Consult held by:

Discipline	Sk. Reg. No.	Signature
ELECTRICAL	32675	

PROFESSIONAL ENGINEER
R.G. DESTIE
MEMBER 32675
2021-01-22
YR. MN. DAY
SASKATCHEWAN

MPE Engineering Ltd.

ENGLISH RIVER ENTERPRISES PROPERTY MANAGEMENT LP

WASTEWATER TREATMENT PLANT
ELECTRICAL
INSTRUMENTATION LOWER LEVEL PLAN

DESIGNED	R.G.O	JOB	7603-002-00
DRAWN	T.S.	SCALE	1:75
DATE	NOVEMBER 2020	DRAWING	E1.5

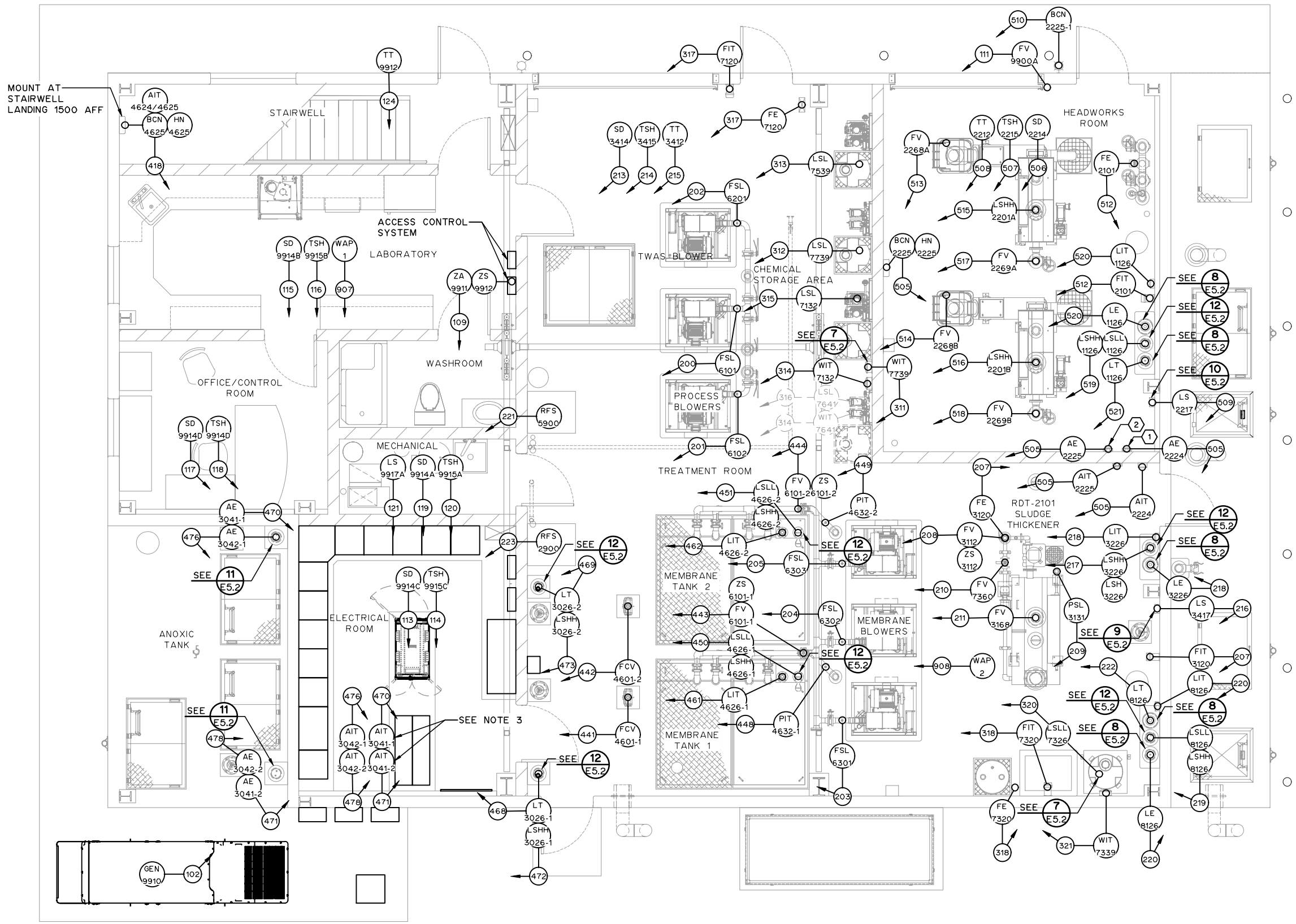

NOTES:

1. FOR INFORMATION REGARDING GENERAL NOTES, UTILITIES, ABBREVIATIONS AND SYMBOLS, REFER TO THE LEGEND DRAWINGS.
2. (--) SEE CONDUIT AND CABLE SCHEDULES ON DRAWINGS.
3. MOUNT AIT-3041-1, AIT-3042-1, AND AIT-3041-2 AIT-3042-2 TO FRONT OF CP-2.

KEY NOTES:

(1) METHANE SENSOR TO BE MOUNTED 200 FROM CEILING.

(2) H2S SENSOR TO BE MOUNTED 50 AFF.

THIS DRAWING MAY HAVE BEEN MODIFIED FROM ITS ORIGINAL SIZE. ALL SCALE NOTATIONS INDICATED ARE BASED ON 11"x17" FORMAT DRAWINGS

ISSUE	YY-MM-DD	REVISION
2	21-01-15	FOR CONSTRUCTION
1	20-10-15	FOR TENDER

Association of Professional Engineers & Geoscientists of Saskatchewan
CERTIFICATE OF AUTHORIZATION
MPE Engineering Ltd.
Number C1334
Permission to Consult held by:

Discipline	Sk. Reg. No.	Signature
ELECTRICAL	32675	

PROFESSIONAL ENGINEER
R.G. DESTE
MEMBER 32675
2021-01-22
YR. MN. DAY.
SASKATCHEWAN

MPE Engineering Ltd.

ENGLISH RIVER ENTERPRISES PROPERTY MANAGEMENT LP

WASTEWATER TREATMENT PLANT
ELECTRICAL
INSTRUMENTATION MAIN FLOOR PLAN

DESIGNED	R.G.O	JOB	7603-002-00
DRAWN	T.S.	SCALE	1:75
DATE	NOVEMBER 2020	DRAWING	E1.6

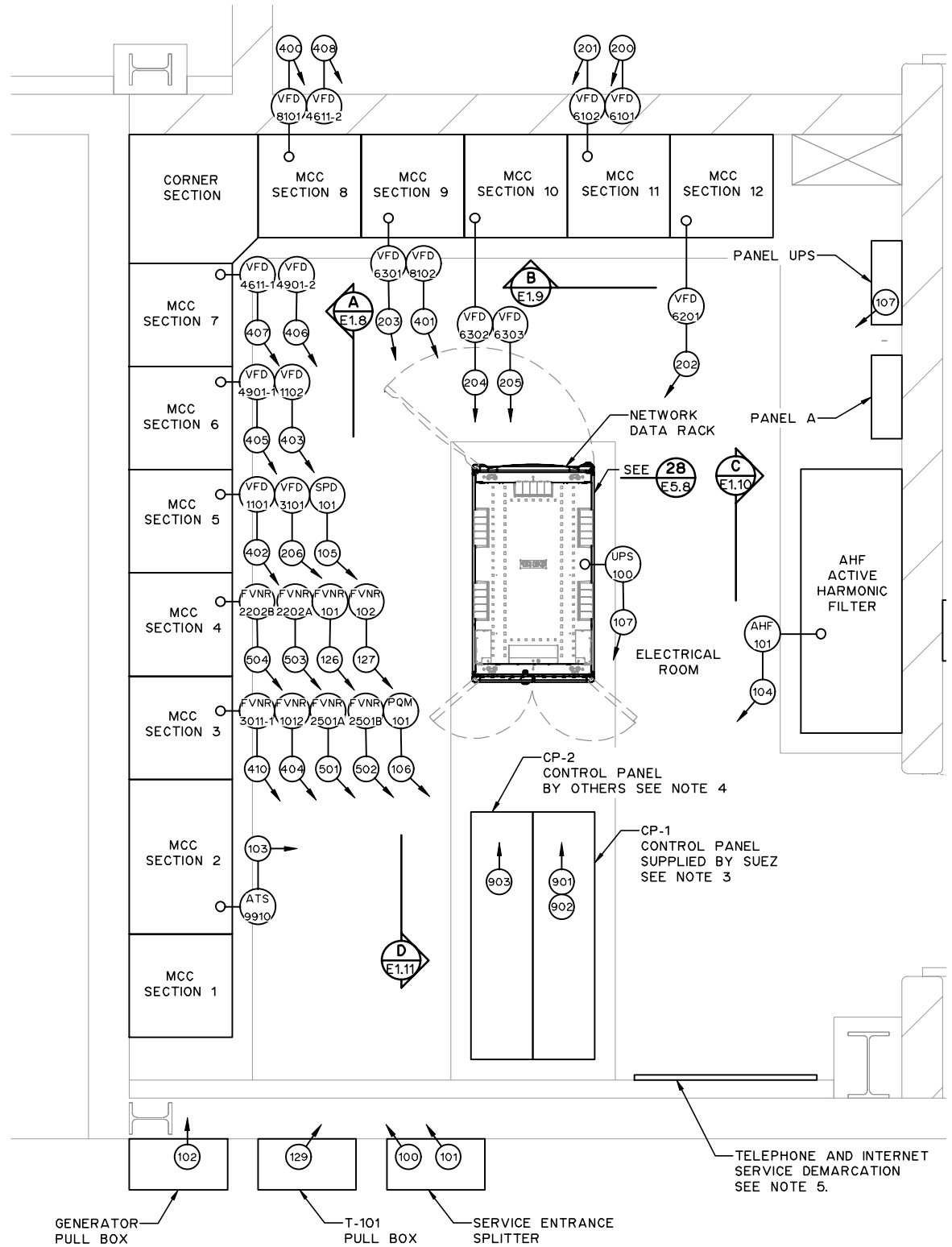

NOTES:

1. FOR INFORMATION REGARDING GENERAL NOTES, UTILITIES, ABBREVIATIONS AND SYMBOLS, REFER TO THE LEGEND DRAWINGS.
2. (---) SEE CONDUIT AND CABLE SCHEDULES ON E-DRAWINGS SERIES.
3. CP-1 TO BE PROVIDED BY SUEZ. CONTRACTOR TO INSTALL CONTROL PANEL AND TERMINATE DEVICES ACCORDING TO PID P1.x SERIES DRAWINGS AND PANEL DRAWINGS.
4. CP-2 TO BE PROVIDED BY OTHERS. CONTRACTOR TO INSTALL CONTROL PANEL AND TERMINATE DEVICES ACCORDING TO PID P1.x SERIES DRAWINGS AND PANEL DRAWINGS. PANEL DRAWINGS TO BE PROVIDED AT TIME OF CONSTRUCTION.
5. INSTALL 900W x 1200H x 25D PLYWOOD BACKBOARD FOR TELCO EQUIPMENT. PAINT TO MATCH WALLS.

THIS DRAWING MAY HAVE BEEN MODIFIED FROM ITS ORIGINAL SIZE. ALL SCALE NOTATIONS INDICATED ARE BASED ON 11"x17" FORMAT DRAWINGS

ISSUE	YY-MM-DD	REVISION
2	21-01-15	FOR CONSTRUCTION
1	20-10-15	FOR TENDER

Association of Professional Engineers & Geoscientists of Saskatchewan
CERTIFICATE OF AUTHORIZATION
MPE Engineering Ltd.
Number C1334
Permission to Consult held by:
Discipline: ELECTRICAL — Sk. Reg. No.: 32675 — Signature

PROFESSIONAL ENGINEER R.G. DESTIE MEMBER 32675 2021-01-22 YR. MN. DAY SASKATCHEWAN

MPE Engineering Ltd.

ENGLISH RIVER ENTERPRISES PROPERTY MANAGEMENT LP

WASTEWATER TREATMENT PLANT
ELECTRICAL
ELECTRICAL ROOM LAYOUT

DESIGNED	R.G.O	JOB	7603-002-00
DRAWN	T.S.	SCALE	1:30
DATE	NOVEMBER 2020	DRAWING	E1.7

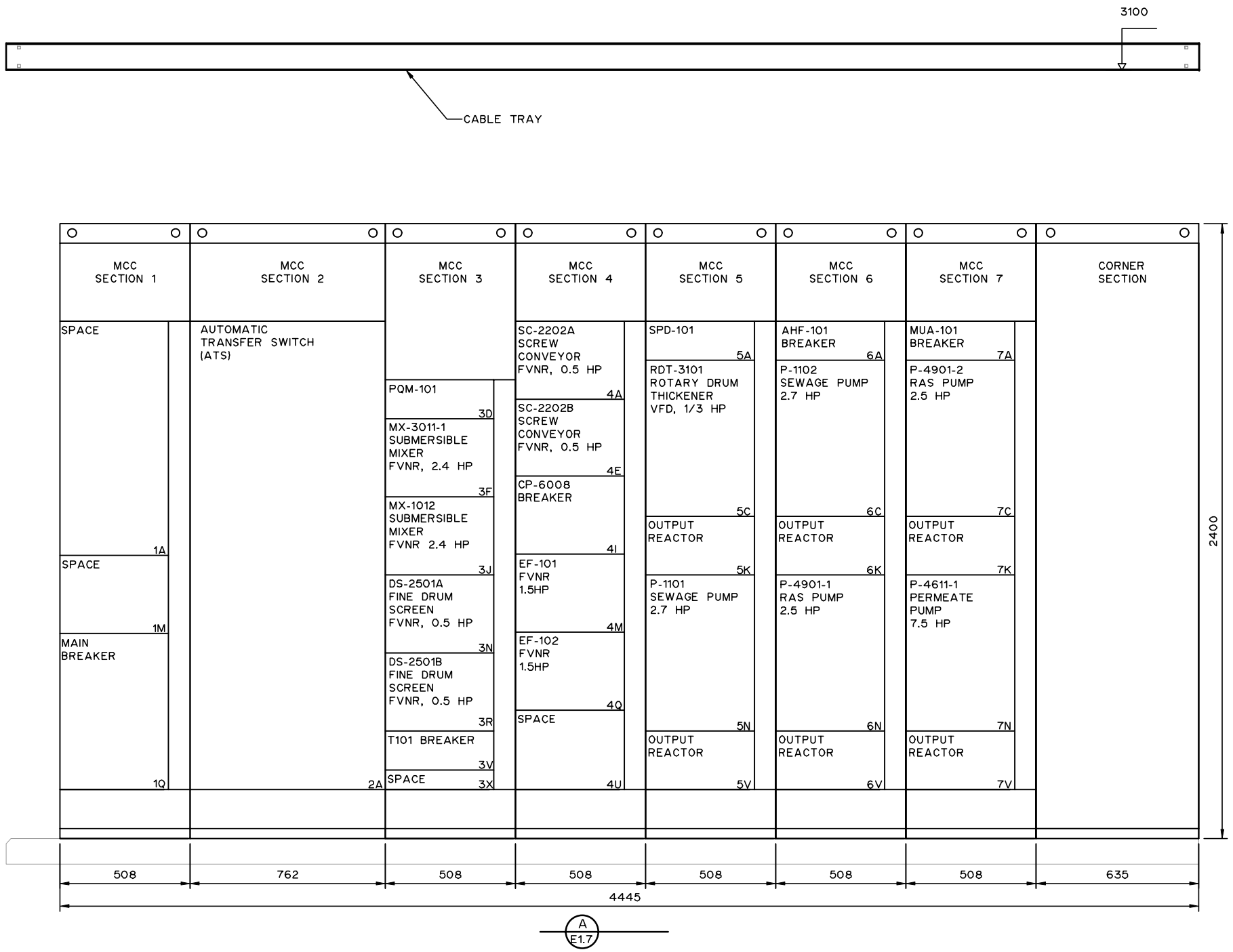

NOTES:

1. FOR INFORMATION REGARDING GENERAL NOTES, UTILITIES, ABBREVIATIONS AND SYMBOLS, REFER TO THE LEGEND DRAWINGS.

THIS DRAWING MAY HAVE BEEN MODIFIED FROM ITS ORIGINAL SIZE. ALL SCALE NOTATIONS INDICATED ARE BASED ON 11"x17" FORMAT DRAWINGS

ISSUE	YY-MM-DD	REVISION
2	21-01-15	FOR CONSTRUCTION
1	20-10-15	FOR TENDER

Association of Professional Engineers & Geoscientists of Saskatchewan
CERTIFICATE OF AUTHORIZATION
MPE Engineering Ltd.
Number C1334
Permission to Consult held by:

Discipline	Sk. Reg. No.	Signature
ELECTRICAL	32675	

PROFESSIONAL ENGINEER
R.G. DESTIE
MEMBER 32675
2021-01-22
YR. MN. DAY
SASKATCHEWAN

MPE Engineering Ltd.

ENGLISH RIVER ENTERPRISES
PROPERTY MANAGEMENT LP

WASTEWATER TREATMENT PLANT
ELECTRICAL
ELECTRICAL ROOM SECTION

DESIGNED	R.G.O	JOB	7603-002-00
DRAWN	T.S.	SCALE	1:20
DATE	NOVEMBER 2020	DRAWING	E1.8

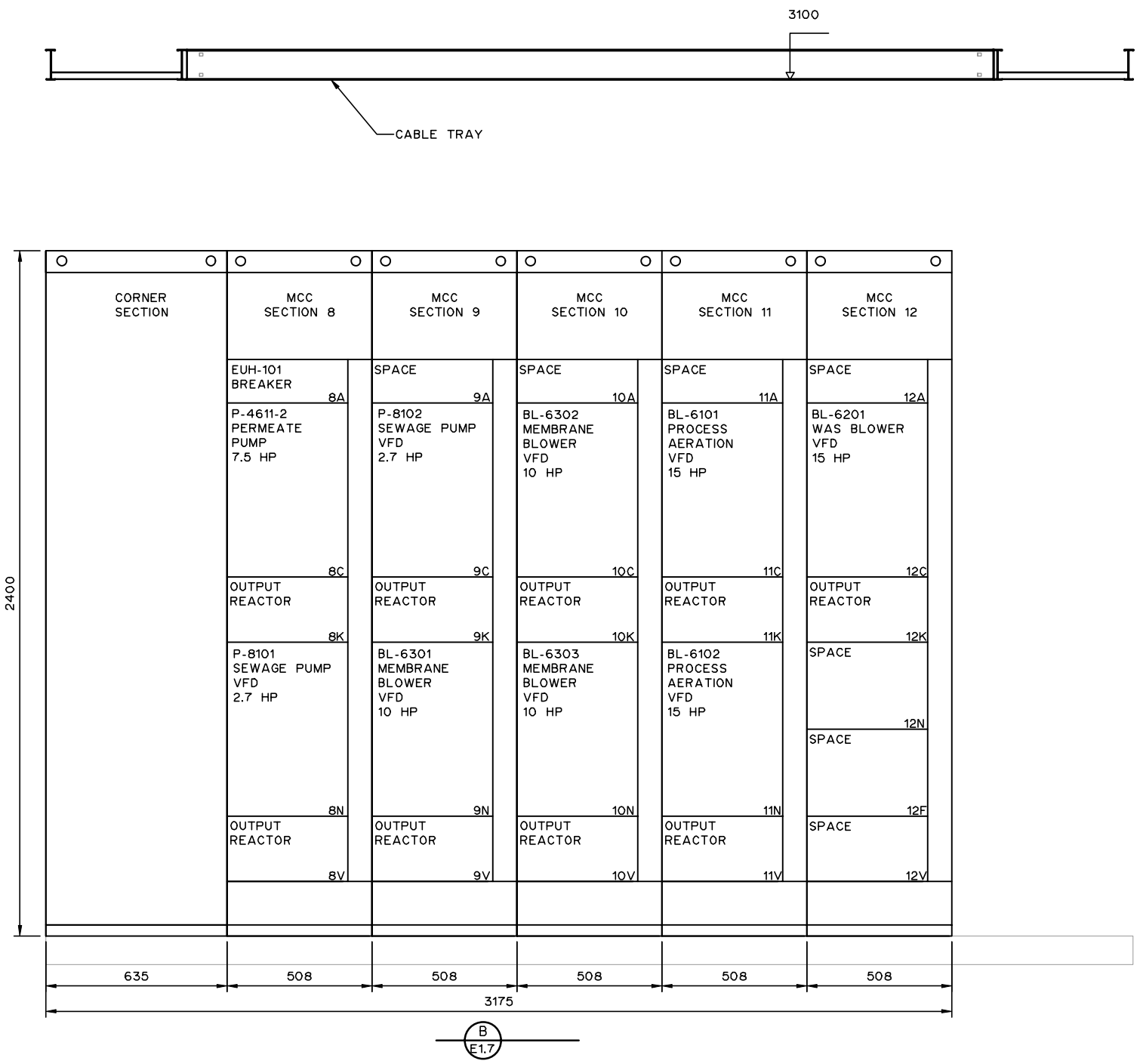

NOTES:

1. FOR INFORMATION REGARDING GENERAL NOTES, UTILITIES, ABBREVIATIONS AND SYMBOLS, REFER TO THE LEGEND DRAWINGS.

THIS DRAWING MAY HAVE BEEN MODIFIED FROM ITS ORIGINAL SIZE. ALL SCALE NOTATIONS INDICATED ARE BASED ON 11"x17" FORMAT DRAWINGS

ISSUE	YY-MM-DD	REVISION
2	21-01-15	FOR CONSTRUCTION
1	20-10-15	FOR TENDER

Association of Professional Engineers & Geoscientists of Saskatchewan
CERTIFICATE OF AUTHORIZATION
MPE Engineering Ltd.
Number C1334
Permission to Consult held by:

Discipline	Sk. Reg. No.	Signature
ELECTRICAL	32675	

PROFESSIONAL ENGINEER
R.G. DESTIE
MEMBER 32675
2021-01-22
YR. MN. DAY.
SASKATCHEWAN

MPE Engineering Ltd.

ENGLISH RIVER ENTERPRISES PROPERTY MANAGEMENT LP

WASTEWATER TREATMENT PLANT
ELECTRICAL
ELECTRICAL ROOM SECTION

DESIGNED	R.G.O	JOB	7603-002-00
DRAWN	T.S.	SCALE	1:20
DATE	NOVEMBER 2020	DRAWING	E1.9

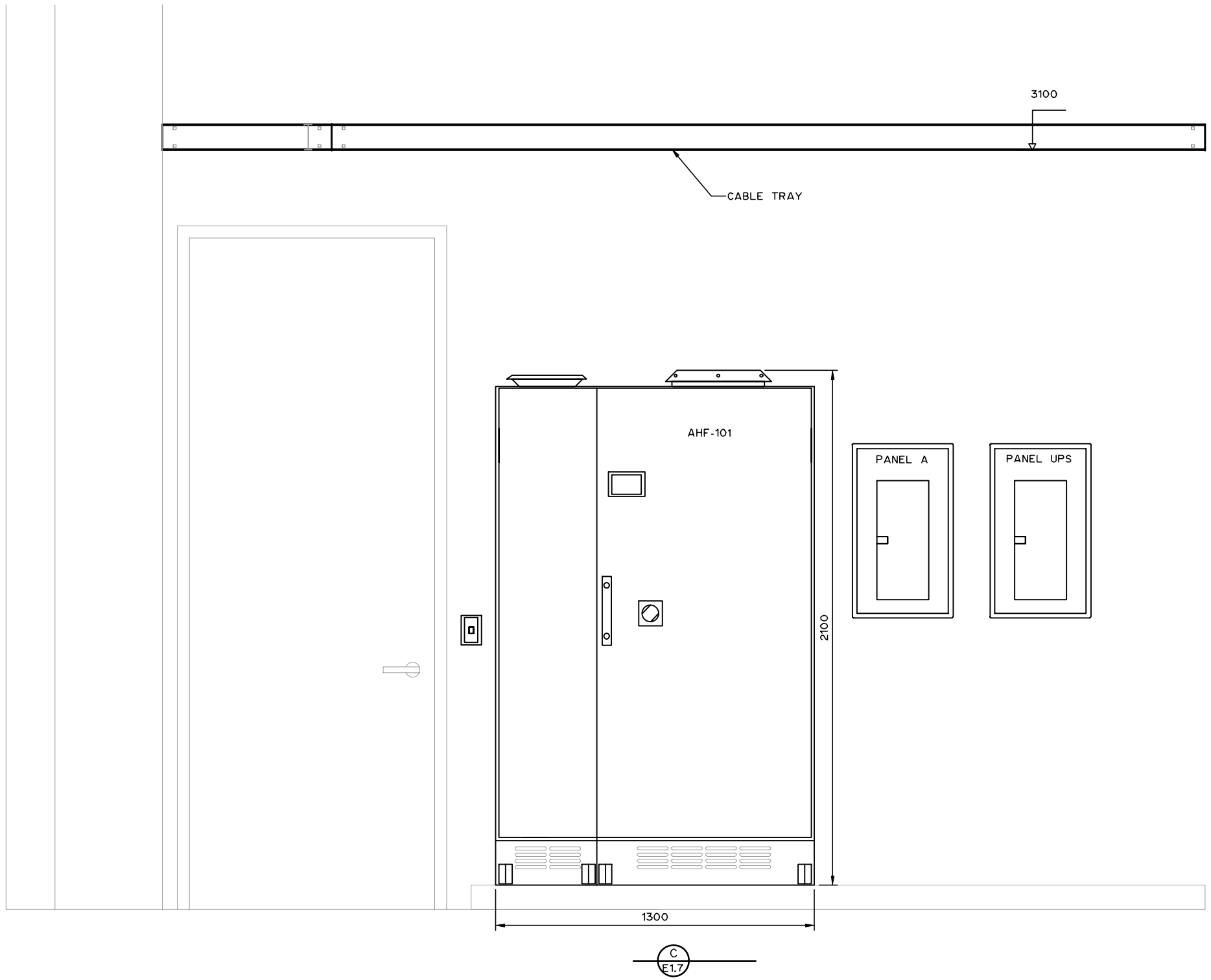

NOTES:

1. FOR INFORMATION REGARDING GENERAL NOTES, UTILITIES, ABBREVIATIONS AND SYMBOLS, REFER TO THE LEGEND DRAWINGS.

THIS DRAWING MAY HAVE BEEN MODIFIED FROM ITS ORIGINAL SIZE. ALL SCALE NOTATIONS INDICATED ARE BASED ON 11"x17" FORMAT DRAWINGS

ISSUE	YY-MM-DD	REVISION
2	21-01-15	FOR CONSTRUCTION
1	20-10-15	FOR TENDER

Association of Professional Engineers & Geoscientists of Saskatchewan
CERTIFICATE OF AUTHORIZATION
MPE Engineering Ltd.
Number C1334
Permission to Consult held by:

Discipline	Sk. Reg. No.	Signature
ELECTRICAL	32675	

PROFESSIONAL ENGINEER
R.G. OSTIE
MEMBER 32675
2021-01-22
YR. MN. DAY
SASKATCHEWAN

MPE Engineering Ltd.

ENGLISH RIVER ENTERPRISES
PROPERTY MANAGEMENT LP

WASTEWATER TREATMENT PLANT
ELECTRICAL
ELECTRICAL ROOM SECTION

DESIGNED	R.G.O	JOB	7603-002-00
DRAWN	T.S.	SCALE	1:20
DATE	NOVEMBER 2020	DRAWING	E1.10

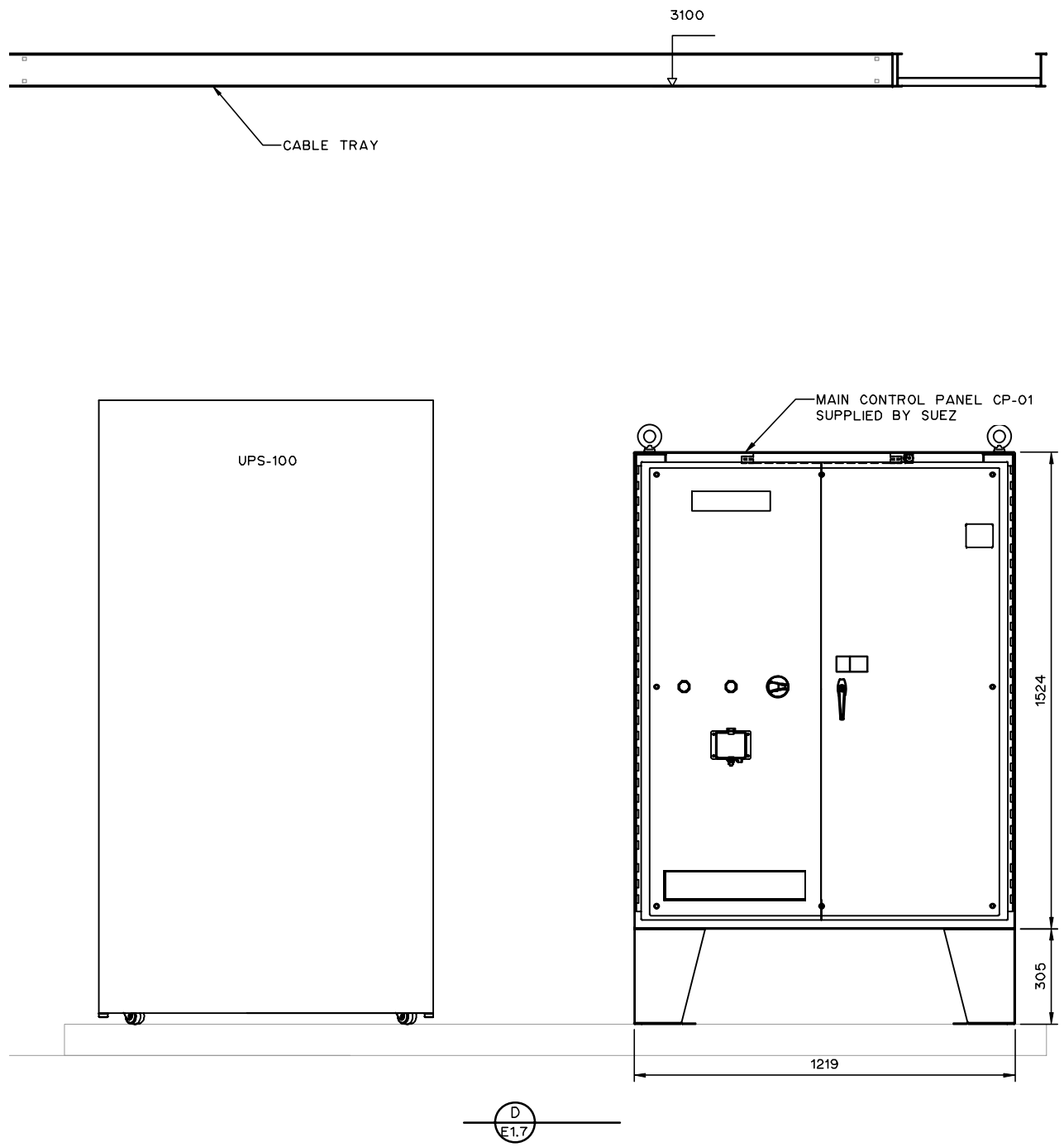

NOTES:

1. FOR INFORMATION REGARDING GENERAL NOTES, UTILITIES, ABBREVIATIONS AND SYMBOLS, REFER TO THE LEGEND DRAWINGS.

THIS DRAWING MAY HAVE BEEN MODIFIED FROM ITS ORIGINAL SIZE. ALL SCALE NOTATIONS INDICATED ARE BASED ON 11"x17" FORMAT DRAWINGS

ISSUE	YY-MM-DD	REVISION
2	21-01-15	FOR CONSTRUCTION
1	20-10-15	FOR TENDER

Association of Professional Engineers & Geoscientists of Saskatchewan
CERTIFICATE OF AUTHORIZATION
MPE Engineering Ltd.
Number C1334
Permission to Consult held by:

Discipline	Sk. Reg. No.	Signature
ELECTRICAL	32675	

PROFESSIONAL ENGINEER
R.G. DESTIE
MEMBER 32675
2021-01-22
YR. MN. DAY
SASKATCHEWAN

MPE Engineering Ltd.

ENGLISH RIVER ENTERPRISES
PROPERTY MANAGEMENT LP

WASTEWATER TREATMENT PLANT
ELECTRICAL
ELECTRICAL ROOM SECTION

DESIGNED	R.G.O	JOB	7603-002-00
DRAWN	T.S.	SCALE	1:20
DATE	NOVEMBER 2020	DRAWING	E1.11

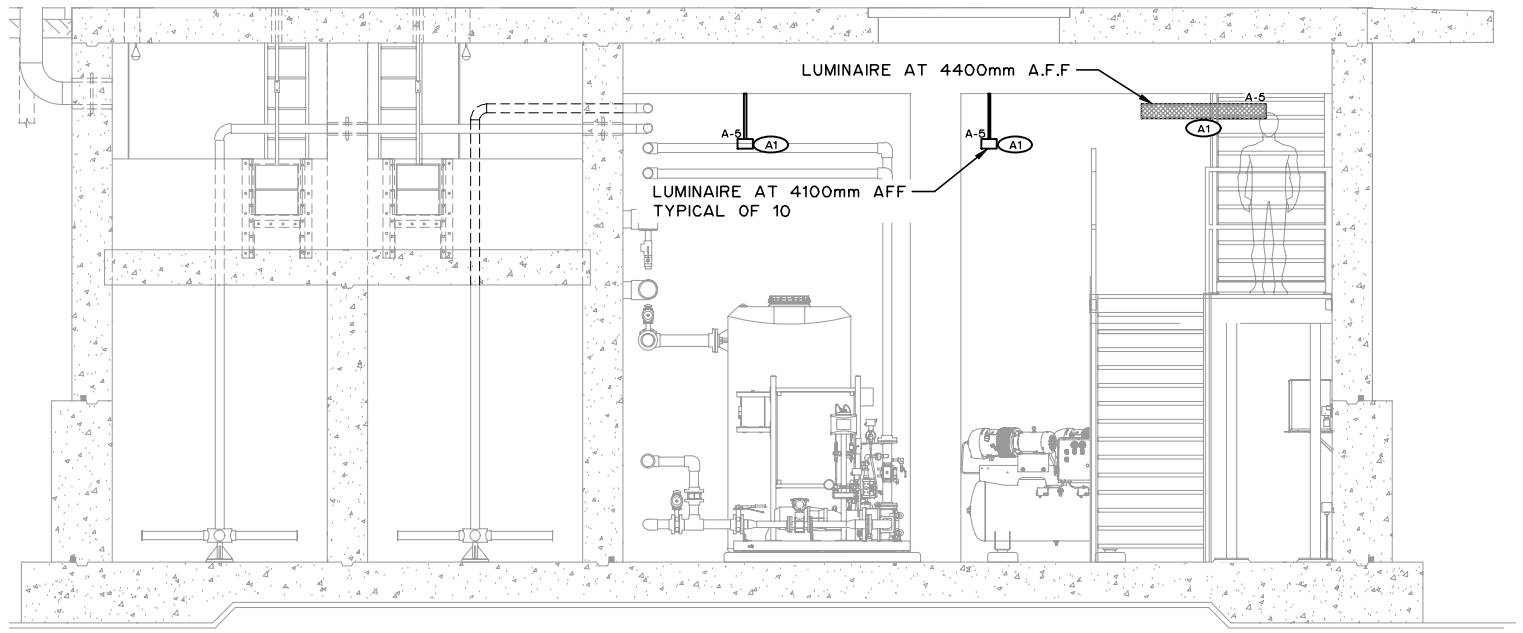

A
E1.3

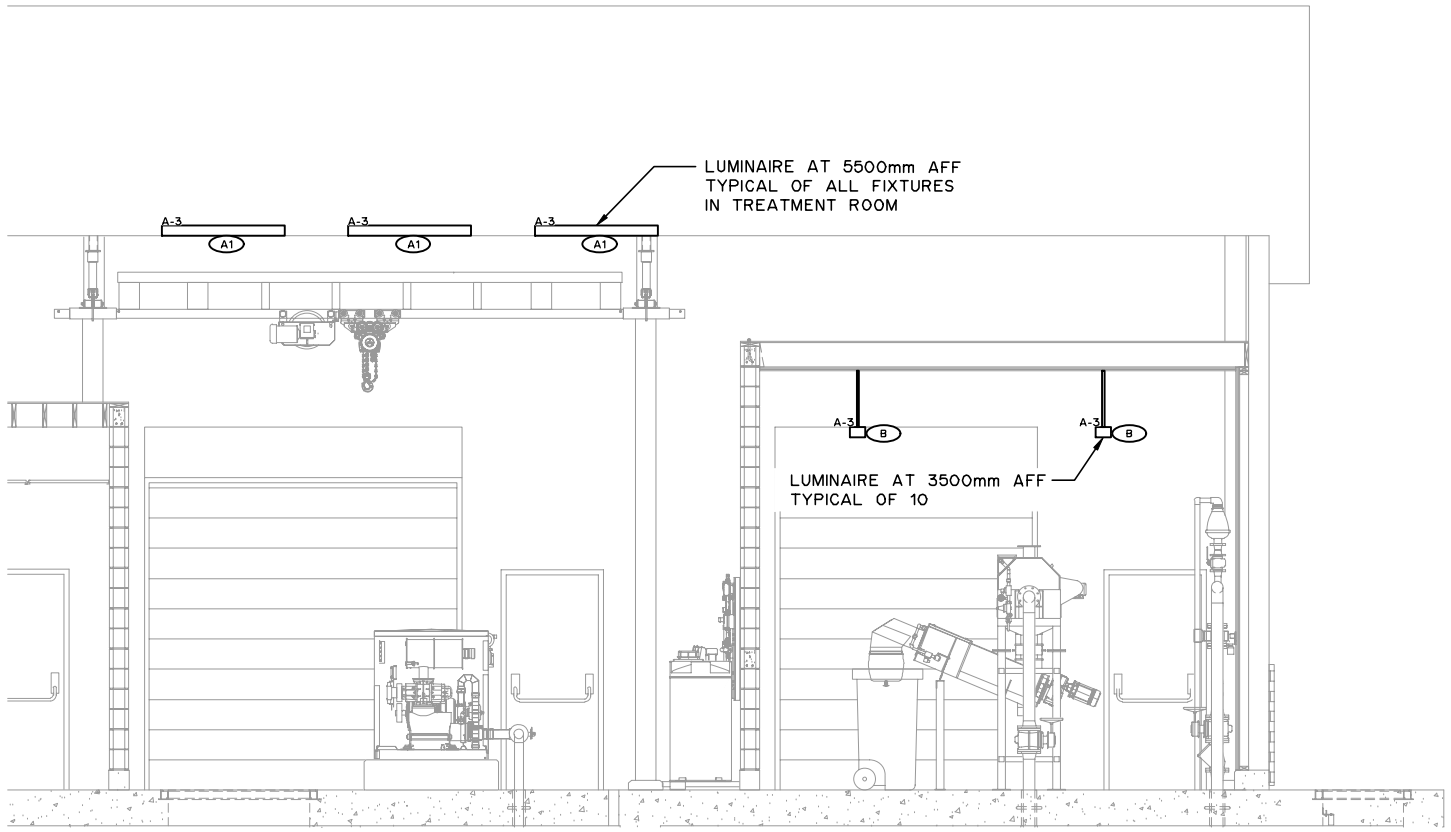

B
E1.4

NOTES:

1. FOR INFORMATION REGARDING GENERAL NOTES, UTILITIES, ABBREVIATIONS AND SYMBOLS, REFER TO THE LEGEND DRAWINGS.

THIS DRAWING MAY HAVE BEEN MODIFIED FROM ITS ORIGINAL SIZE. ALL SCALE NOTATIONS INDICATED ARE BASED ON 11"x17" FORMAT DRAWINGS

ISSUE	YY-MM-DD	REVISION
2	21-01-15	FOR CONSTRUCTION
1	20-10-15	FOR TENDER

Association of Professional Engineers & Geoscientists of Saskatchewan
CERTIFICATE OF AUTHORIZATION
MPE Engineering Ltd.
Number C1334
Permission to Consult held by:

Discipline	Sk. Reg. No.	Signature
ELECTRICAL	32675	

PROFESSIONAL ENGINEER
R.G. DESTIE
MEMBER 32675
2021-01-22
YR. MN. DAY
SASKATCHEWAN

MPE Engineering Ltd.

ENGLISH RIVER ENTERPRISES
PROPERTY MANAGEMENT LP

WASTEWATER TREATMENT PLANT
ELECTRICAL
LIGHTING SECTIONS

DESIGNED	R.G.O.	JOB	7603-002-00
DRAWN	T.S.	SCALE	1:75
DATE	NOVEMBER 2020	DRAWING	E1.12

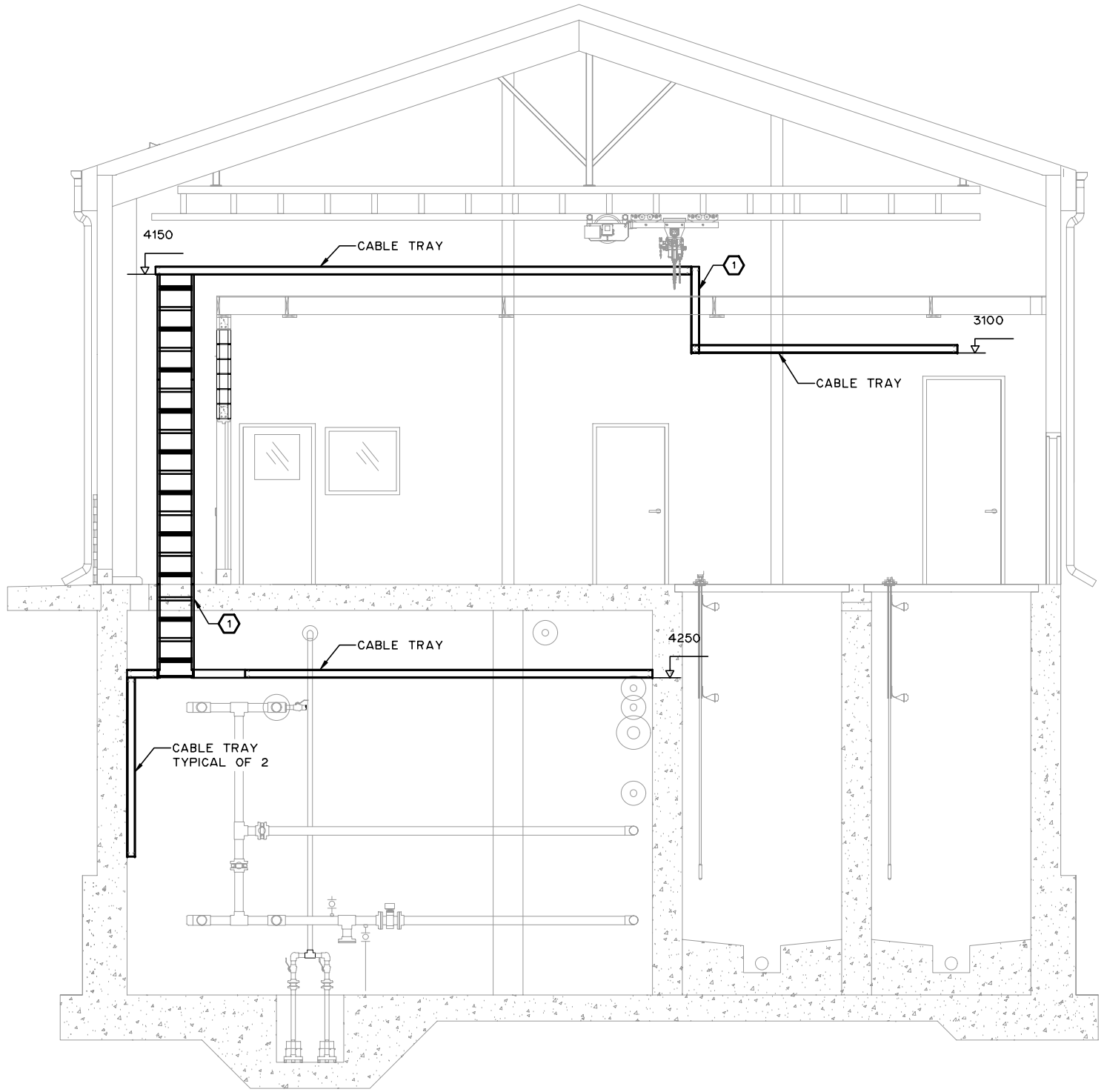

A E1.2 B E1.1

NOTES:

1. FOR INFORMATION REGARDING GENERAL NOTES, UTILITIES, ABBREVIATIONS AND SYMBOLS, REFER TO THE LEGEND DRAWINGS.

KEY NOTES:

1. CONTRACTOR TO FIRE STOP PENETRATION USING ROXTEC MULTI-TRANSIT CABLE GLAND SYSTEM COMPLETE WITH AT LEAST 10% SPARE CAPACITY FOR FUTURE CABLE RUNS OF EACH SIZE.

THIS DRAWING MAY HAVE BEEN MODIFIED FROM ITS ORIGINAL SIZE. ALL SCALE NOTATIONS INDICATED ARE BASED ON 11"x17" FORMAT DRAWINGS

ISSUE	YY-MM-DD	REVISION
2	21-01-15	FOR CONSTRUCTION
1	20-10-15	FOR TENDER

Association of Professional Engineers & Geoscientists of Saskatchewan
CERTIFICATE OF AUTHORIZATION
MPE Engineering Ltd.
Number C1334
Permission to Consult held by:

Discipline	Sk. Reg. No.	Signature
ELECTRICAL	32675	

PROFESSIONAL ENGINEER
R.G. OESTIE
MEMBER 32675
2021-01-22
YR. MN. DAY
SASKATCHEWAN

MPE Engineering Ltd.

ENGLISH RIVER ENTERPRISES PROPERTY MANAGEMENT LP

WASTEWATER TREATMENT PLANT

ELECTRICAL

CABLE TRAY SECTION

DESIGNED	R.G.O.	JOB	7603-002-00
DRAWN	T.S.	SCALE	1:75
DATE	NOVEMBER 2020	DRAWING	E1.13

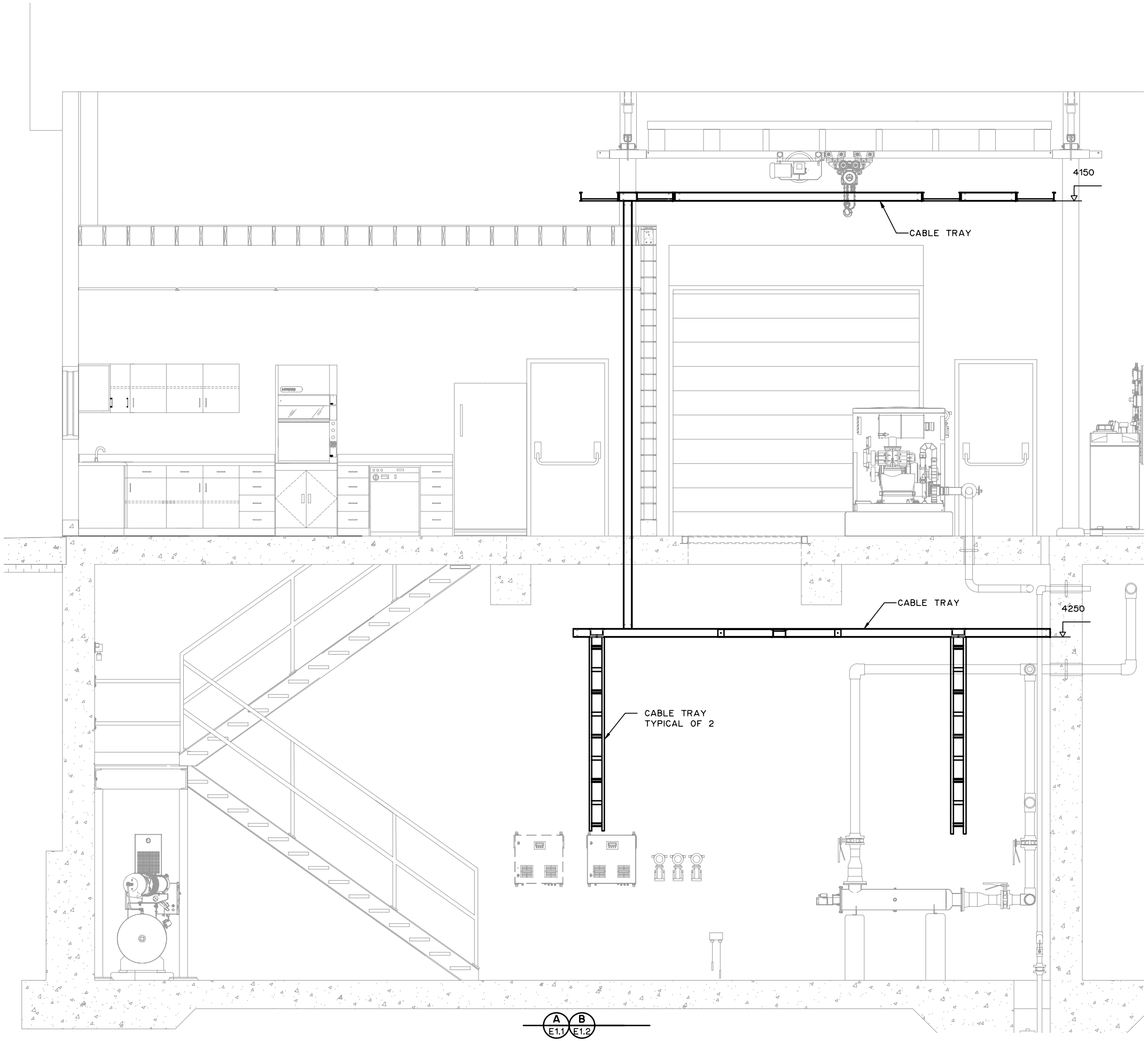

NOTES:

1. FOR INFORMATION REGARDING GENERAL NOTES, UTILITIES, ABBREVIATIONS AND SYMBOLS, REFER TO THE LEGEND DRAWINGS.

THIS DRAWING MAY HAVE BEEN MODIFIED FROM ITS ORIGINAL SIZE. ALL SCALE NOTATIONS INDICATED ARE BASED ON 11"x17" FORMAT DRAWINGS

ISSUE	YY-MM-DD	REVISION
2	21-01-15	FOR CONSTRUCTION
1	20-10-15	FOR TENDER

Association of Professional Engineers & Geoscientists of Saskatchewan
CERTIFICATE OF AUTHORIZATION
MPE Engineering Ltd.
Number C1334
Permission to Consult held by:

Discipline	SK. Reg. No.	Signature
ELECTRICAL	32675	

PROFESSIONAL ENGINEER
R.G. DESTIE
MEMBER 32675
2021-01-22
YR. MN. DAY.
SASKATCHEWAN

MPE Engineering Ltd.

ENGLISH RIVER ENTERPRISES
PROPERTY MANAGEMENT LP

WASTEWATER TREATMENT PLANT
ELECTRICAL
CABLE TRAY SECTION

DESIGNED	R.G.O.	JOB	7603-002-00
DRAWN	T.S.	SCALE	1:50
DATE	NOVEMBER 2020	DRAWING	E1.14

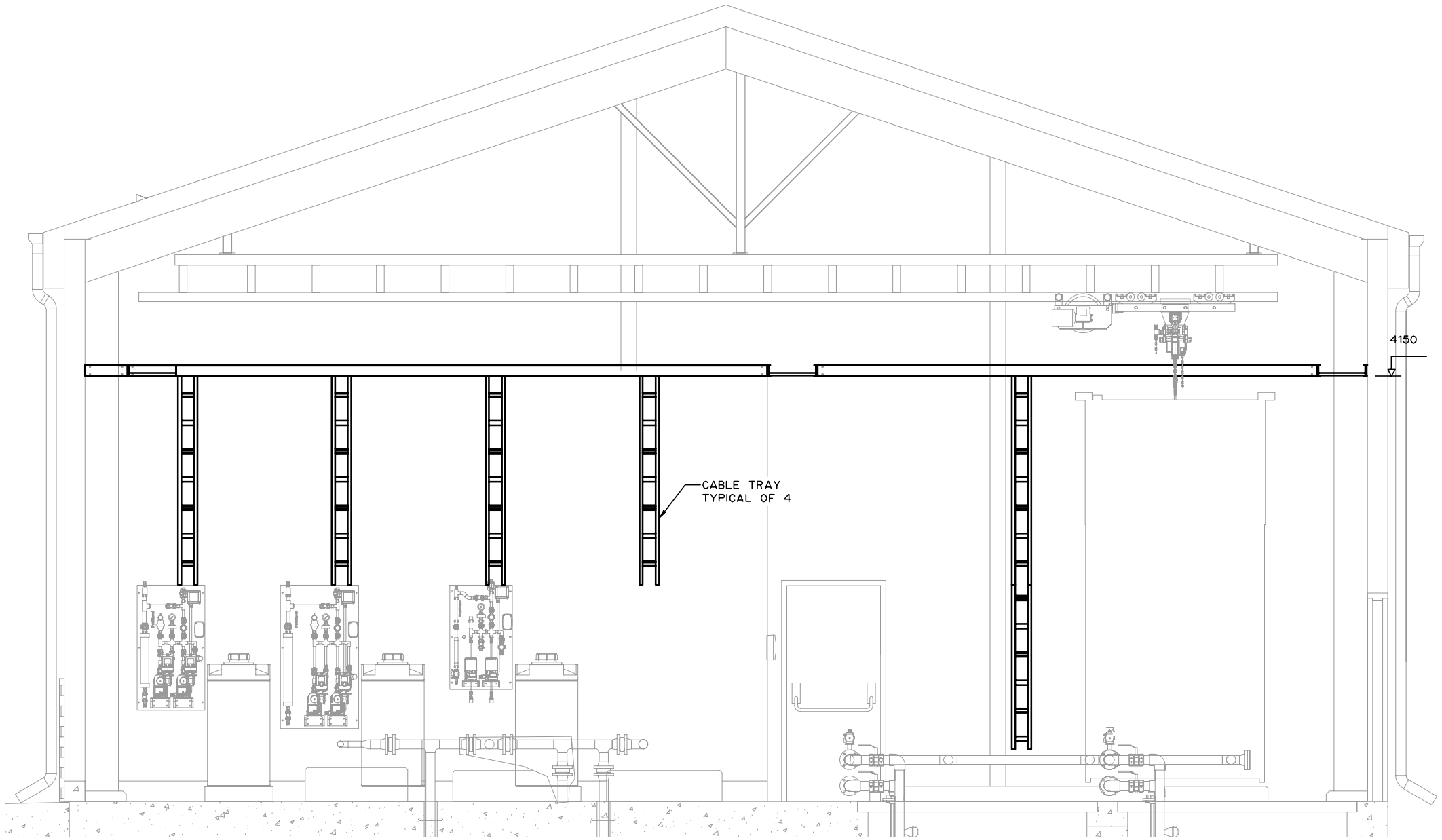

C
E1.2

NOTES:

1. FOR INFORMATION REGARDING GENERAL NOTES, UTILITIES, ABBREVIATIONS AND SYMBOLS, REFER TO THE LEGEND DRAWINGS.

THIS DRAWING MAY HAVE BEEN MODIFIED FROM ITS ORIGINAL SIZE. ALL SCALE NOTATIONS INDICATED ARE BASED ON 11"x17" FORMAT DRAWINGS

ISSUE	YY-MM-DD	REVISION
2	21-01-15	FOR CONSTRUCTION
1	20-10-15	FOR TENDER

Association of Professional Engineers & Geoscientists of Saskatchewan
CERTIFICATE OF AUTHORIZATION
MPE Engineering Ltd.
Number C1334
Permission to Consult held by:

Discipline	Sk. Reg. No.	Signature
ELECTRICAL	32675	

PROFESSIONAL ENGINEER
R.G. OFSTIE
MEMBER 32675
2021-01-22
YR. MN. DAY.
SASKATCHEWAN

MPE Engineering Ltd.

ENGLISH RIVER ENTERPRISES
PROPERTY MANAGEMENT LP

WASTEWATER TREATMENT PLANT
ELECTRICAL
CABLE TRAY SECTION

DESIGNED	R.G.O.	JOB	7603-002-00
DRAWN	T.S.	SCALE	1:50
DATE	NOVEMBER 2020	DRAWING	E1.15

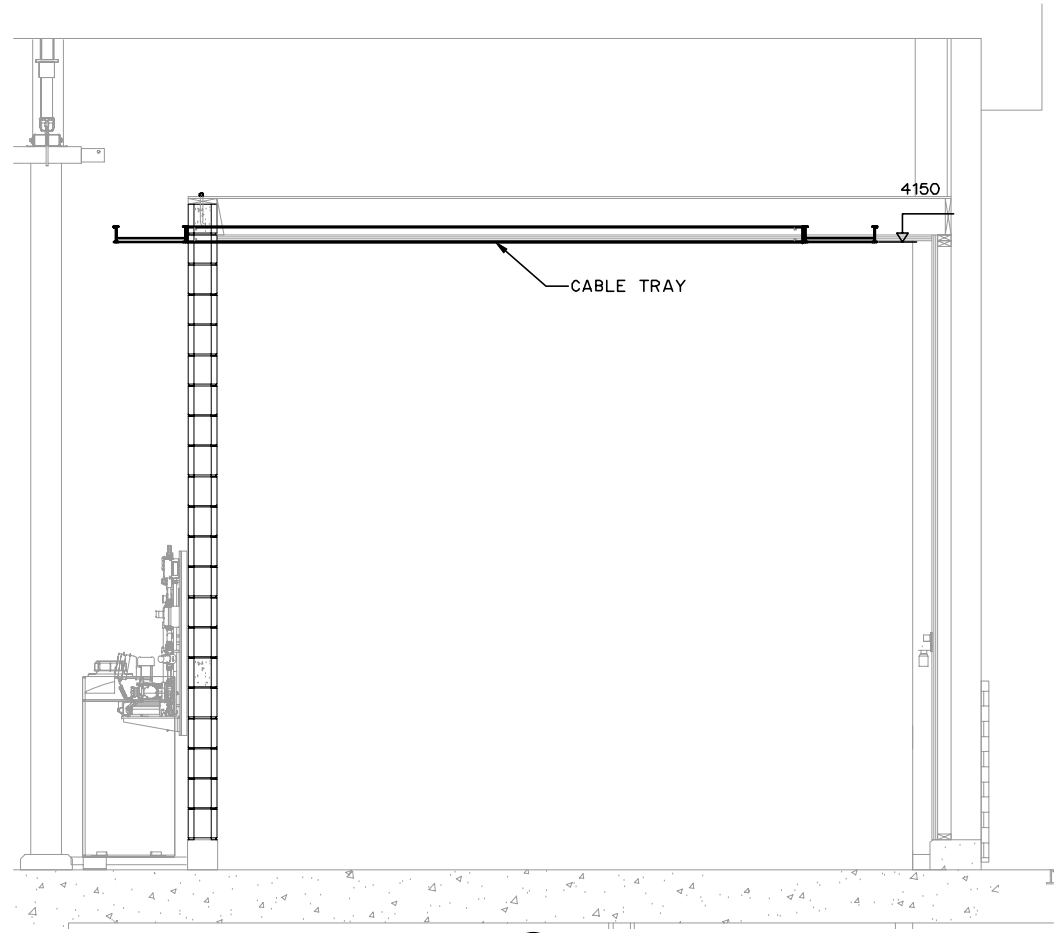

D
E1.2

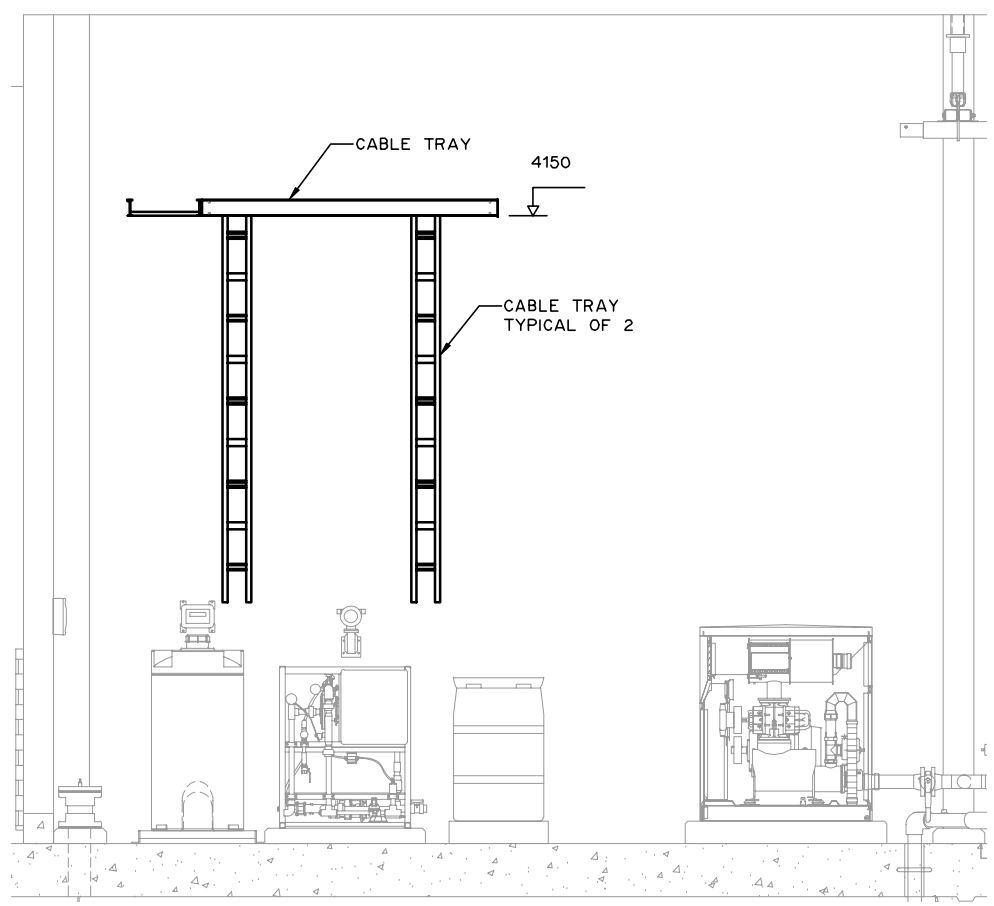

E
E1.2

NOTES:

1. FOR INFORMATION REGARDING GENERAL NOTES, UTILITIES, ABBREVIATIONS AND SYMBOLS, REFER TO THE LEGEND DRAWINGS.

THIS DRAWING MAY HAVE BEEN MODIFIED FROM ITS ORIGINAL SIZE. ALL SCALE NOTATIONS INDICATED ARE BASED ON 11"x17" FORMAT DRAWINGS

ISSUE	YY-MM-DD	REVISION
2	21-01-15	FOR CONSTRUCTION
1	20-10-15	FOR TENDER

Association of Professional Engineers & Geoscientists of Saskatchewan
CERTIFICATE OF AUTHORIZATION
MPE Engineering Ltd.
Number C1334
Permission to Consult held by:

Discipline	SK. Reg. No.	Signature
ELECTRICAL	32675	

PROFESSIONAL ENGINEER
R.G. DESTIE
MEMBER 32675
2021-01-22
YR. MN. DAY.
SASKATCHEWAN

MPE Engineering Ltd.

ENGLISH RIVER ENTERPRISES
PROPERTY MANAGEMENT LP

WASTEWATER TREATMENT PLANT
ELECTRICAL
CABLE TRAY SECTION

DESIGNED	R.G.O.	JOB	7603-002-00
DRAWN	T.S.	SCALE	1:50
DATE	NOVEMBER 2020	DRAWING	E1.16

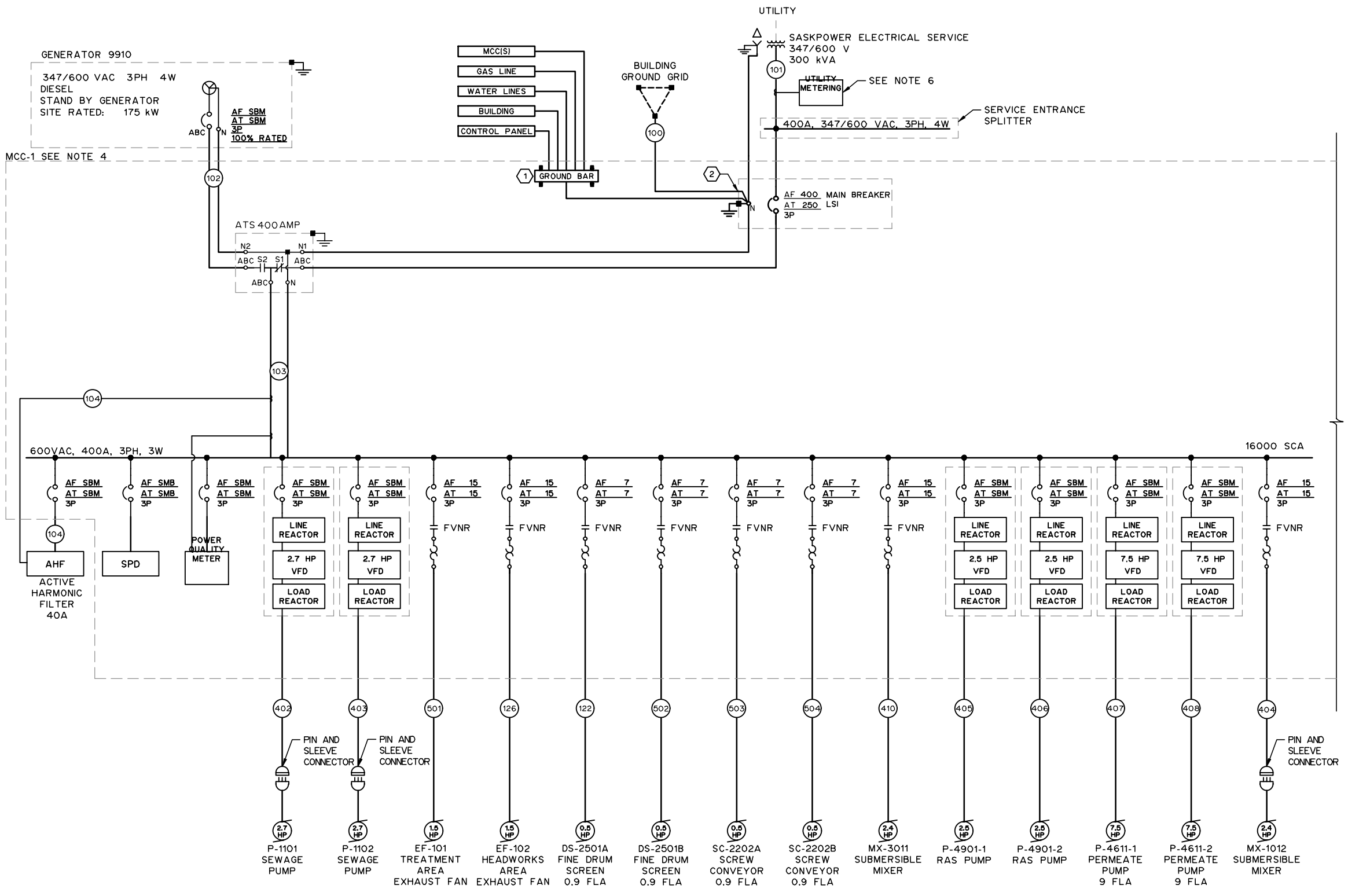

NOTES:

1. FOR INFORMATION REGARDING GENERAL NOTES, UTILITIES, ABBREVIATIONS AND SYMBOLS, REFER TO THE LEGEND DRAWINGS.
2. SBM = SIZED BY MANUFACTURER. SIZE OVER CURRENT DEVICE AND CABLING AS PER MANUFACTURERS RECOMMENDATIONS.
3. (--) SEE CONDUIT AND CABLE SCHEDULES ON E-DRAWINGS SERIES.
4. SEE MCC LINE UP FOR PROPOSED MCC LAYOUT AND DIMENSIONS.
5. EQUIPMENT SHOWN CONNECTED TO GROUND BUS IS A TYPICAL REPRESENTATION OF EQUIPMENT TO BE CONNECTED. IT IS THE CONTRACTORS RESPONSIBILITY TO PROPERLY GROUND AND BOND ALL NECESSARY EQUIPMENT AS PER RELEVANT CODES.
6. UTILITY METERING AT TRANSFORMER BY ELECTRIC COMPANY.
5. SEE MOTOR STARTER DETAILS ON E-DRAWING SERIES.

KEY NOTES:

1. GROUND BUSS BAR, HOFFMAN: DGTB216 OR EQUAL.
2. CONTINUOUS GROUND CABLE, DO NOT CUT.
3. WALL MOUNTED TRANSFORMER.

THIS DRAWING MAY HAVE BEEN MODIFIED FROM ITS ORIGINAL SIZE. ALL SCALE NOTATIONS INDICATED ARE BASED ON 11"x17" FORMAT DRAWINGS

ISSUE	YY-MM-DD	REVISION
2	21-01-15	FOR CONSTRUCTION
1	20-10-15	FOR TENDER

Association of Professional Engineers & Geoscientists of Saskatchewan
CERTIFICATE OF AUTHORIZATION
MPE Engineering Ltd.
Number C1334
Permission to Consult held by:

Discipline	Sk. Reg. No.	Signature
ELECTRICAL	32675	

PROFESSIONAL ENGINEER
R.G. OSTIE
MEMBER 32675
2021-01-22
YR. MN. DAY.
SASKATCHEWAN

MPE Engineering Ltd.

ENGLISH RIVER ENTERPRISES PROPERTY MANAGEMENT LP

WASTEWATER TREATMENT PLANT
ELECTRICAL
SINGLE LINE DIAGRAM

DESIGNED	R.G.O	JOB	7603-002-00
DRAWN	T.S.	SCALE	N.T.S.
DATE	NOVEMBER 2020	DRAWING	E2.1

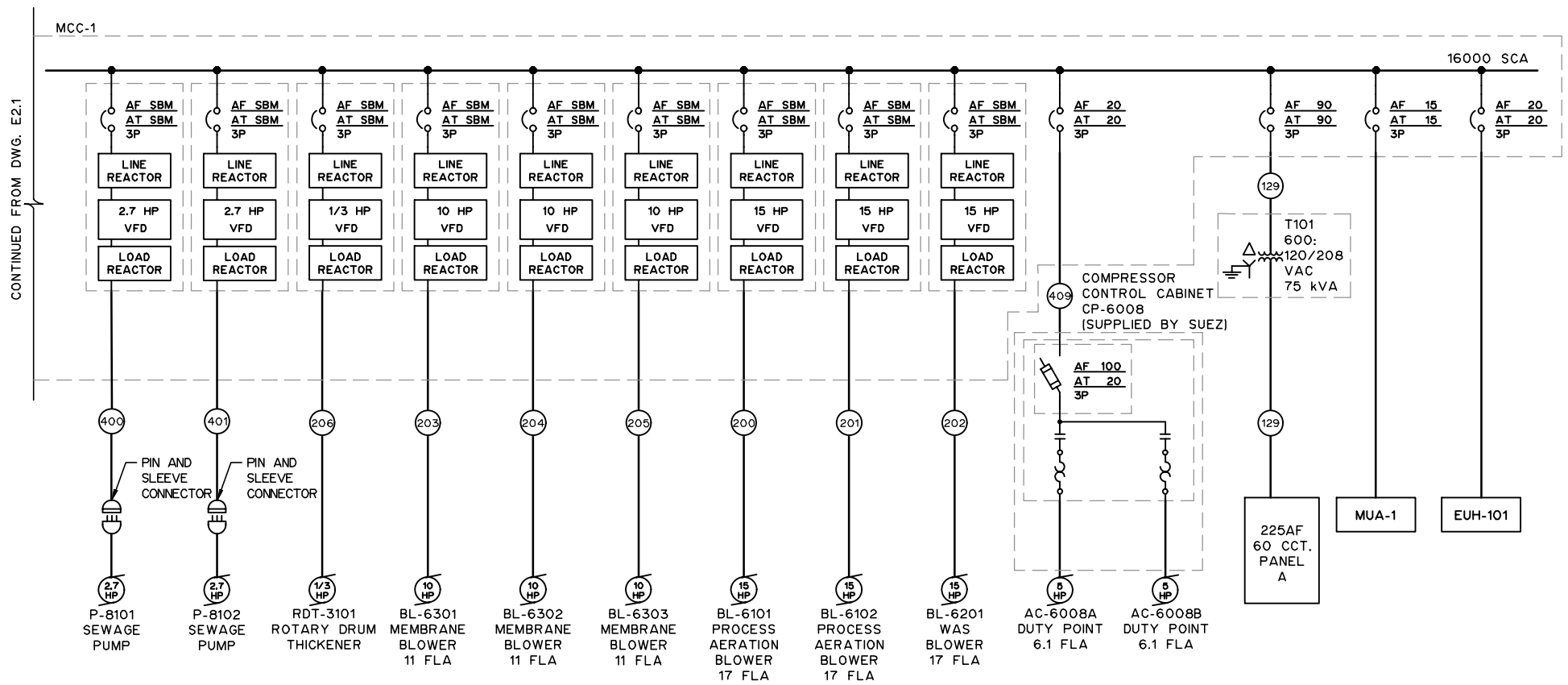

NOTES:

1. FOR INFORMATION REGARDING GENERAL NOTES, UTILITIES, ABBREVIATIONS AND SYMBOLS, REFER TO THE LEGEND DRAWINGS.
2. SBM = SIZED BY MANUFACTURER. SIZE OVER CURRENT DEVICE AND CABLING AS PER MANUFACTURERS RECOMMENDATIONS.
3. (--) SEE CONDUIT AND CABLE SCHEDULES ON E-DRAWINGS SERIES.
4. SEE MCC LINE UP FOR PROPOSED MCC LAYOUT AND DIMENSIONS.
5. SEE MOTOR STARTER DETAILS ON E-DRAWING SERIES.

THIS DRAWING MAY HAVE BEEN MODIFIED FROM ITS ORIGINAL SIZE. ALL SCALE NOTATIONS INDICATED ARE BASED ON 11"x17" FORMAT DRAWINGS

ISSUE	YY-MM-DD	REVISION
2	21-01-15	FOR CONSTRUCTION
1	20-10-15	FOR TENDER

Association of Professional Engineers & Geoscientists of Saskatchewan
CERTIFICATE OF AUTHORIZATION
MPE Engineering Ltd.
Number C1334
Permission to Consult held by:

Discipline	Sk. Reg. No.	Signature
ELECTRICAL	32675	

PROFESSIONAL ENGINEER
R.G. DESTIE
MEMBER 32675
2021-01-22
YR. MN. DAY
SASKATCHEWAN

MPE Engineering Ltd.

ENGLISH RIVER ENTERPRISES PROPERTY MANAGEMENT LP

WASTEWATER TREATMENT PLANT
ELECTRICAL
SINGLE LINE DIAGRAM

DESIGNED	R.G.O	JOB	7603-002-00
DRAWN	T.S.	SCALE	N.T.S.
DATE	NOVEMBER 2020	DRAWING	E2.2

	PANEL: A LOCATION: ELECTRICAL ROOM 120/208V 3PH 4W 225A							
DESCRIPTION	LOAD (W)	TRIP AMPS	BRK. No.	PHASE	BRK. No.	TRIP AMPS	LOAD (W)	DESCRIPTION
LAB, CONTROL, MECHANICAL, WASHROOM AND ELECTRICAL ROOMS LIGHTING		15	1	A	2	15		WASHROOM, MECHANICAL AND ELECTICAL ROOMS RECEPTACLES
TREATMENT AND HEADWORKS ROOMS LIGHTING		15	3	B	4	15		STAIRWELL, LAB AND CONTROL ROOMS RECEPTACLES
STAIRWELL AND LOWER LEVEL INTERIOR LIGHTING		15	5	C	6	15		TREATMENT ROOM RECEPTACLES
AREA LIGHTING		15	7	A	8	15		EXTERIOR RECEPTACLES
HVAC MAINTENANCE RECEPTACLES		20	9	B	10	15		EXTERIOR RECEPTACLES
LOWER LEVEL RECEPTACLES CCT 2		15	11	C	12	15		LOWER LEVEL RECEPTACLES CCT 1
			13	A	14	20		LAB REFRIGERATOR RECEPTACLE
			15	B	16			
HRV-101 HEAT RECOVERY VENTILATOR		15	17	C	18	15		TP-7300 TRANSFER PUMP
UVR 5155-2 ULTRAVIOLET REACTOR (FUTURE)		15	19	A	20	15		UVR 5155-1 ULTRAVIOLET REACTOR
			21	B	22			
AC-101 AIR CONDITIONER	1980	20	23	C	24	15		LAB RECEPTACLES 1
			25	A	26	15		LAB RECEPTACLES 2
AC-102 AIR CONDITIONER	4680	30	27	B	28	15		LAB RECEPTACLES 3
			29	C	30	15		LAB RECEPTACLES 4
P-4911B SUMP PUMP RECEPTACLES		20	31	A	32	20		P-4911A SUMP PUMP RECEPTACLES
UH-201 AND UH-202 UNIT HEATER		15	33	B	34	20	4000	EUH-110 ELECTRIC UNIT HEATER
LABORATORY DISHWASHER		20	35	C	36			
			37	A	38	15		HOT WATER HEATER
UH-101, UH-102 AND UH-103 UNIT HEATERS		15	39	B	40	15	1100	SF-201 AERATION TANK SUPPLY FAN
F-101 FURNACE		15	41	C	42			
EF-201 MEMBRANE TANK EXHAUST FAN	50	15	43	A	44	15	1100	SF-202 EFFLUENT TANK SUPPLY FAN
OVERHEAD DOOR OPERATOR		15	45	B	46			
OVERHEAD DOOR OPERATOR		15	47	C	48	15	1100	SF-203 WET WELL TANK SUPPLY FAN
			49	A	50			
RFS-5900 REFRIDGERATED SAMPLER		15	51	B	52			
RFS-2900 REFRIDGERATED SAMPLER		15	53	C	54	60		GEN-9910 GENERATOR BREAKER PANEL
PERIMETER GATE OPERATOR	746	15	55	A	56			
			57	B	58	30	4800	UPS-101 PLANT UNINTERRUPTABLE POWER SUPPLY
			59	C	60			
SEPTAGE RECEIVING STATION SUBPANEL		50	61	A	62			
			63	B	64			
P7141A / P7141B CHEMICAL PUMP		15	65	C	66			
P7541A / P7541B CHEMICAL PUMP		15	67	A	68			
P7641A / P7641B CHEMICAL PUMP (FUTURE)		15	69	B	70			
P7741A / P7741B CHEMICAL PUMP		15	71	C	72			
DR-6009A / DR-6009B AIR DRYERS	400	15	73	A	74			
			75	B	76			
			77	C	78			
			79	A	80			
			81	B	82			
			83	C	84			

SEE NOTES 2 AND 3

	PANEL: UPS LOCATION: ELECRICAL ROOM 120/208V 1PH 3W 60A							
DESCRIPTION	LOAD (W)	TRIP AMPS	BRK. No.	PHASE	BRK. No.	TRIP AMPS	LOAD (W)	DESCRIPTION
MAIN CONTROL PANEL CP-1		15	1	A	2	15		SCADA PC RECEPTACLE
REMOTE I/O PANEL CP-11		15	3	B	4	15		INTERNET PC RECEPTACLE
REMOTE I/O PANEL CP-12		15	5	C	6			
PLANT CONTROL PANEL CP-2		15	7	A	8			
ACCESS CONTROL SYSTEM POWER SUPPLY (ASC PSU)		15	9	B	10			
			11	C	12			
			13	A	14			
			15	B	16			
			17	C	18			
			19	A	20			
			21	B	22			
			23	C	24			

SEE NOTES 2 AND 3

NOTES:

1. FOR INFORMATION REGARDING GENERAL NOTES, UTILITIES, ABBREVIATIONS AND SYMBOLS, REFER TO THE LEGEND DRAWINGS.
2. CONTRACTOR IS RESPONSIBLE FOR PROVIDING PROPERLY SIZED WIRING AND BREAKERS BETWEEN ALL BREAKERS SHOWN AND THE EQUIPMENT INDICATED FOR CONNECTIONS NOT INDICATED IN THE CABLE AND CONDUIT SCHEDULE.
3. MINIMUM WIRING SHALL BE No.12 AWG.

THIS DRAWING MAY HAVE BEEN MODIFIED FROM ITS ORIGINAL SIZE. ALL SCALE NOTATIONS INDICATED ARE BASED ON 11"x17" FORMAT DRAWINGS

ISSUE	YY-MM-DD	REVISION
2	21-01-15	FOR CONSTRUCTION
1	20-10-15	FOR TENDER

Association of Professional Engineers & Geoscientists of Saskatchewan
CERTIFICATE OF AUTHORIZATION
MPE Engineering Ltd.
Number C1334
Permission to Consult held by:

Discipline	Sk. Reg. No.	Signature
ELECTRICAL	32675	

PROFESSIONAL ENGINEER
R.G. OESTIE
MEMBER 32675
2021-01-22
YR. MN. DAY.
SASKATCHEWAN

MPE Engineering Ltd.

ENGLISH RIVER ENTERPRISES PROPERTY MANAGEMENT LP

WASTEWATER TREATMENT PLANT
ELECTRICAL
PANEL A AND UPS PANEL SCHEDULES

DESIGNED	R.G.O	JOB	7603-002-00
DRAWN	T.S.	SCALE	N.T.S.
DATE	NOVEMBER 2020	DRAWING	E2.3

LUMINAIRE SCHEDULE

TAG	DESCRIPTION	MANUFACTURER/MODEL (OR APPROVED EQUIVALENT)	MOUNTING HEIGHT	LAMPS	LENS	FIXTURE LUMEN OUTPUT	COLOUR TEMPERATURE	MOUNTING	VOLT	LIFESPAN	REMARKS
A1	LED STRIP LIGHT	COLUMBIA LIGHTING / LCL4-40HL-EU	3500/4100/5100 / 5500 AFF	LED	N/A	5411	4000K	FLUSH W/ CEILING	120 VAC	50,000 HRS	
A2	FLAT PANEL LED	22FP4240C	3050 AFF	LED	N/A	4465	4000K	T-BAR CEILING	120 VAC		
A3	FLAT PANEL LED	22FP2540HE	3050 AFF	LED	N/A	2551	4000K	T-BAR CEILING	120 VAC		
B	LED HAZARDOUS LOCATION STRIP LIGHT	COLUMBIA LIGHTING / HEM4-40HL-DFA-EU	3500 AFF	LED	DEEP FROSTED ACRYLIC	5800	4000K	FLUSH TO CEILING	120 VAC	60,000 HRS	CLASS 1, DIVISION 2, GROUPS A, B, C, D
C	LED DOWNLIGHT	PRESSCOILITE / LBP6-6LBP11L40KWH	3050 AFF	LED	N/A	800	4000K	CEILING	120 VAC	60,000 HRS	
D	LED WALL PACK	RAB DESIGN / AWL-LED26-A-4K-BRZ-PC	3000 AFF	LED	CLEAR TEMPERED GLASS	3566	4000K	WALL	120 VAC	100,000 HRS	C/W PHOTOCELL FOR OUTDOOR LOCATIONS
F	LED POLE LIGHT	VPL/80L-180/5K7/3/UNV/x/DB/7PR	4000 ABOVE SLAB	LED	ACRYLIC, TYPE III DISTRIBUTION	22246	4000K	POLE	120 VAC	60,000 HRS	POLE TO BE AS PER DETAIL 13 ON DRAWING E5.3
EM-A1	EMERGENCY BATTERY PACK WITH TWO HEADS	AIMLITE / EBST12-2L	2500 AFF	LED	N/A			WALL	120 VAC / 12 VDC		
EM-A2	DOUBLE REMOTE HEAD	AIMLITE / RMMD-2-12-6-LA-WHT	2500 AFF	LED	N/A			WALL	120 VAC / 12 VDC		
EM-B1	HAZARDOUS LOCATION EMERGENCY BATTERY PACK WITH TWO HEADS	AIMLITE / EBZN2-12-050-2MW-6WLA	2500 AFF	LED	N/A			WALL	120 VAC / 12 VDC		CLASS 1, DIVISION 2, GROUPS A, B, C, D
EM-C1	WET LOCATION EMERGENCY BATTERY PACK WITH TWO HEADS	AIMLITE / EBN-12-50-6WLA-WHT	2500 AFF	LED	N/A			WALL	120 VAC / 12 VDC		
EM-C2	WET LOCATION DOUBLE REMOTE HEAD	AIMLITE / RMN-2-12-6W-LA-WHT	2500 AFF	LED	N/A			WALL	120 VAC / 12 VDC		
EM-D	WET LOCATION EXIT SIGN AND BATTERY PACK WITH TWO HEADS	AIMLITE / CRPN-12-36-1-WHT-W-6WLA									
EX-A	ILLUMINATED EXIT SIGN	AIMLITE / RPSP-1-WHT-BAT	2500 AFF	LED	N/A			WALL	120 VAC / 12 VDC		
EX-C	HAZARDOUS LOCATION ILLUMINATED EXIT	AIMLITE / RPHZ-1-W-1-1-CD	102 ABOVE DOOR	LED	N/A			WALL	120 VAC / 12 VDC		CLASS 1, DIVISION 2, GROUPS A, B, C, D

MECHANICAL SCHEDULE

TAG	DESCRIPTION	LOCATION	LOAD	VOLTAGE	PHASE	FEEDER	STARTER	CCT BRK (AMPS)	CCT No.	CONTROL	INTERLOCKS	REMARKS
EF-101	EXHAUST FAN	TREATMENT ROOM	1120 W	600 VAC	3	12 AWG	FVNR	15	MCC	CONTINUOUS OPERATION	DM-EF-101, MUA-101	EXPLOSION PROOF / ZONE 2
EF-102	EXHAUST FAN	HEADWORKS	190 W	600 VAC	3	12 AWG	FVNR	15	MCC	REMOTE CONTROL STATION	DM-EF-102	EXPLOSION PROOF / ZONE 2
EF-201	EXHAUST FAN	TREATMENT ROOM	80 W	120 VAC	1	12 AWG		15	A 43	MANUAL SWITCH		
SF-201	SUPPLY FAN	BUILDING EXTERIOR	1120 W	208 VAC	1	12 AWG	MANUAL STARTER	15	A 40, 42	MANUAL SWITCH		
SF-202	SUPPLY FAN	BUILDING EXTERIOR	1120 W	208 VAC	1	12 AWG	MANUAL STARTER	15	A 44, 46	MANUAL SWITCH		
SF-203	SUPPLY FAN	BUILDING EXTERIOR	1120 W	208 VAC	1	12 AWG	MANUAL STARTER	15	A 48, 50	MANUAL SWITCH		
MUA-101	MAKEUP AIR HANDLING UNIT	BUILDING EXTERIOR	5600 W	600 VAC	3	12 AWG		15	MCC	CONTINUOUS OPERATION	EF-101	
F-101	FURNACE	MECHANICAL ROOM	300 W	120 VAC	1	12 AWG		15	A 41	REMOTE THERMOSTAT	T-120	
HRV-101	HEAT RECOVERY VENTILATOR	MECHANICAL ROOM	150 W	120 VAC	1	12 AWG		15	A 17	CONTINUOUS OPERATION		
AC-101	AIR CONDITIONER	BUILDING EXTERIOR	1.976 kW	208 VAC	1	12 AWG		20	A 23, 25	REMOTE THERMOSTAT	T-120	
AC-102	AIR CONDITIONER CONDENSER	BUILDING EXTERIOR	4.68 kW	208 VAC	1	10 AWG		30	A 27, 29	REMOTE THERMOSTAT	T-112	
	AIR CONDITIONER EVAPORATOR	ELECTRICAL ROOM	270 W	208 VAC	1	10 AWG						
UH-101	UNIT HEATER	TREATMENT ROOM	186 W	120 VAC	1	12 AWG		15	A 39	REMOTE THERMOSTAT	T-101	
UH-102	UNIT HEATER	TREATMENT ROOM	186 W	120 VAC	1	12 AWG		15	A 39	REMOTE THERMOSTAT	T-102	
UH-103	UNIT HEATER	TREATMENT ROOM	186 W	120 VAC	1	12 AWG		15	A 39	REMOTE THERMOSTAT	T-103	
UH-201	UNIT HEATER	PUMP ROOM	186 W	120 VAC	1	12 AWG		15	A 33	REMOTE THERMOSTAT	T-105	
UH-202	UNIT HEATER	PUMP ROOM	186 W	120 VAC	1	12 AWG		15	A 33	REMOTE THERMOSTAT	T-201	
EUH-101	ELECTRIC UNIT HEATER	HEADWORKS ROOM	15 kW	600 VAC	3	12 AWG		20	MCC	REMOTE THERMOSTAT	T-202	
EUH-110	WALL FAN HEATER	STAIRWAY	4 kW	208 VAC	1	12 AWG		20	A 34, 36	INEGRAL CONTROL		
HWH-101	HOT WATER HEATER	MECHANICAL ROOM		120 VAC	1	12 AWG		15	A 38	INEGRAL CONTROL		
T-101	REMOTE THERMOSTAT	TREATMENT ROOM		24 VAC	1	14 AWG					UH-101	DIVISION 16 TO SUPPLY AND TERMINATE THERMOSTAT WIRING
T-102	REMOTE THERMOSTAT	TREATMENT ROOM		24 VAC	1	14 AWG					UH-102	DIVISION 16 TO SUPPLY AND TERMINATE THERMOSTAT WIRING
T-103	REMOTE THERMOSTAT	TREATMENT ROOM		24 VAC	1	14 AWG					UH-103	DIVISION 16 TO SUPPLY AND TERMINATE THERMOSTAT WIRING
T-105	REMOTE THERMOSTAT	HEADWORKS ROOM		24 VAC	1	14 AWG					EUH-105	DIVISION 16 TO SUPPLY AND TERMINATE THERMOSTAT WIRING
T-112	REMOTE THERMOSTAT	ELECTRICAL ROOM		24 VAC	1	14 AWG					AC-102	DIVISION 16 TO SUPPLY AND TERMINATE THERMOSTAT WIRING
T-120	REMOTE THERMOSTAT	LAB/CONTROL ROOM		24 VAC	1	14 AWG					F-101, AC-101	DIVISION 16 TO SUPPLY AND TERMINATE THERMOSTAT WIRING
T-201	REMOTE THERMOSTAT	PUMP ROOM		24 VAC	1	14 AWG					UH-201	DIVISION 16 TO SUPPLY AND TERMINATE THERMOSTAT WIRING
T-202	REMOTE THERMOSTAT	PUMP ROOM		24 VAC	1	14 AWG					UH-202	DIVISION 16 TO SUPPLY AND TERMINATE THERMOSTAT WIRING
DM-EF-101	ELECTRIC DAMPER	TREATMENT ROOM	6.5 W	120 VAC	1	14 AWG			MCC		EF-101	
DM-EF-102	ELECTRIC DAMPER	HEADWORKS ROOM	6.5 W	120 VAC	1	14 AWG			MCC		EF-102, DM-102	
DM-102	ELECTRIC DAMPER	HEADWORKS ROOM	6.5 W	120 VAC	1	14 AWG			MCC		EF-102, DM-EF-102	

NOTES:

1. FOR INFORMATION REGARDING GENERAL NOTES, UTILITIES, ABBREVIATIONS AND SYMBOLS, REFER TO THE LEGEND DRAWINGS.

THIS DRAWING MAY HAVE BEEN MODIFIED FROM ITS ORIGINAL SIZE. ALL SCALE NOTATIONS INDICATED ARE BASED ON 11"x17" FORMAT DRAWINGS

ISSUE	YY-MM-DD	REVISION
2	21-01-15	FOR CONSTRUCTION
1	20-10-15	FOR TENDER

Association of Professional Engineers & Geoscientists of Saskatchewan
CERTIFICATE OF AUTHORIZATION
MPE Engineering Ltd.
Number C1334
Permission to Consult held by:

Discipline	Sk. Reg. No.	Signature
ELECTRICAL	32675	

PROFESSIONAL ENGINEER
R.G. DESTIE
MEMBER 32675
2021-01-22
YR. MN. DAY.
SASKATCHEWAN

MPE Engineering Ltd.

ENGLISH RIVER ENTERPRISES PROPERTY MANAGEMENT LP

WASTEWATER TREATMENT PLANT
ELECTRICAL
LUMINAIRE AND MECHANICAL SCHEDULES

DESIGNED	R.G.O.	JOB	7603-002-00
DRAWN	T.S.	SCALE	N.T.S.
DATE	NOVEMBER 2020	DRAWING	E2.4

CONDUIT AND CABLE SCHEDULE

COND. No.	COND. TAG	DESCRIPTION	LOCATION	CONDUIT SIZE AND TYPE	TAG / FROM	TO	WIRE TYPE	No. OF WIRES	WIRE SIZE	REMARKS
100	A	GROUND	WWTP EXTERIOR	N/A	GROUND GRID	MAIN BREAKER	BARE COPPER	1	6 AWG	GROUND GRID
101	A	SECONDARY SERVICE CONDUCTORS	WWTP EXTERIOR	2-63? DB2 IN CONCRETE DUCT BANK	SERVICE TRANSFORMER	SERVICE ENTRANCE SPLITTER	R90 AL	4 IN EACH	250 KCMIL	600 VAC POWER
	B			2-53? RIGID STEEL	SERVICE ENTRANCE SPLITTER	MAIN BREAKER	R90	4 IN EACH	3/0 AWG	600 VAC POWER
102	A	GENERATOR	WWTP EXTERIOR	TECK	GEN 9910	ATS 9919	R90	4	250 KCMIL	600 VAC POWER
	B			TECK			R90	4	14 AWG	GENERATOR START SIGNAL (2 SPARE)
	D			TECK		CP-2	R90	6	14 AWG	120 VAC STATUS
	E						R90	3	6 AWG	60A BREAKER PANEL
	F			TECK		NETWORK RACK DATA PATCH PANEL	1-SHIELDED CAT 6 ETHERNET			ETHERNET/IP COMMUNICATIONS
103	A	AUTOMATIC TRANSFER SWITCH	ELECTRICAL ROOM	-	ATS 9919	GENERATOR	-	-	-	SEE GENERATOR
	B			TECK		CP-2	R90	5	14 AWG	24 VDC STATUS (2 SPARE)
104	A	ACTIVE HARMONIC FILTER	ELECTRICAL ROOM	1-63? RPVC IN SLAB	AHF 101	MCC-1	R90	4	4/0 AWG	600 VAC POWER
	B			1-35? RPVC IN SLAB			R90	6	10 AWG	CURRENT TRANSFORMER
	C			TECK		CP-2	R90	2	14 AWG	24 VDC STATUS
105	A	SURGE PROTECTION DEVICE (SPD)	ELECTRICAL ROOM	TECK	SPD 101	CP-2	R90	2	14 AWG	24 VDC STATUS
106	A	POWER QUALITY MONITOR	ELECTRICAL ROOM	TECK	PQM 101	CP-2	R90	2	14 AWG	24 VDC STATUS
	B			TECK		NETWORK RACK DATA PATCH PANEL	1-SHIELDED CAT 6 ETHERNET			ETHERNET COMMUNICATIONS
107	A	UNINTERRUPTABLE POWER SUPPLY	ELECTRICAL ROOM	TECK	UPS 101	CP-2	R90	4	14 AWG	24 VDC STATUS
	B			TECK		PANEL A	R90	3	8 AWG	120/208 VAC 1PH POWER
	C			TECK		PANEL UPS	R90	3	8 AWG	120/208 VAC 1PH POWER
108	A	ACCESS CONTROL SYSTEM POWER SUPPLY - ACS PSU	ELECTRICAL ROOM	TECK	ACS PSU	PANEL UPS	R90	2	12 AWG	120 VAC POWER
109	A	ACCESS CONTROL SYSTEM (ACS) MASTER CONTROLLER	ELECTRICAL ROOM	1-27? EMT	ZS 9911	CP-2	R90	6	14 AWG	24 VDC STATUS AND CONTROL
	B			1-21? EMT	ACS MASTER	ACS PSU	R90	2	14 AWG	24 VDC POWER
	C			TECK		NETWORK RACK DATA PATCH PANEL	1-SHIELDED CAT 6 ETHERNET			ETHERNET COMMUNICATIONS
	D			1-21? EMT		ACS SLAVE 1	BELDEN	1-PAIR	18 AWG	RS 485 COMMUNICATIONS
	E		STAIRWELL	1-27? RPVC - TRANSITION TO 1-27? EMT IN OFFICE AREAS		DOOR 101	HONEYWELL 3206	6	22 AWG	CARD READER
							HONEYWELL 3115	4	18 AWG	ELECTRIC STRIKE
							HONEYWELL 3102	2	22 AWG	DOOR CONTACT
							HONEYWELL 3104	4	22 AWG	MOTION RTE
	F		TREATMENT ROOM	1-27? RPVC - TRANSITION TO 1-27? EMT IN OFFICE AREAS		DOOR 103	HONEYWELL 3206	6	22 AWG	CARD READER
							HONEYWELL 3115	4	18 AWG	ELECTRIC STRIKE
							HONEYWELL 3102	2	22 AWG	DOOR CONTACT
							HONEYWELL 3104	4	22 AWG	MOTION RTE
110	A	ACCESS CONTROL SYSTEM (ACS) SLAVE CONTROLLER	ELECTRICAL ROOM	1-21? EMT	ACS SLAVE 1	ACS PSU	R90	2	14 AWG	24 VDC POWER
	B			1-21? EMT		ACS MASTER	BELDEN	1-PAIR	18 AWG	RS 485 COMMUNICATIONS
	C		TREATMENT ROOM	1-27? RPVC		DOOR 106	HONEYWELL 3206	6	22 AWG	CARD READER
							HONEYWELL 3115	4	18 AWG	ELECTRIC STRIKE
							HONEYWELL 3102	2	22 AWG	DOOR CONTACT
							HONEYWELL 3104	4	22 AWG	MOTION RTE
	D		TREATMENT ROOM	1-27? RPVC		DOOR 113	HONEYWELL 3206	6	22 AWG	CARD READER
							HONEYWELL 3115	4	18 AWG	ELECTRIC STRIKE
							HONEYWELL 3102	2	22 AWG	DOOR CONTACT
							HONEYWELL 3104	4	22 AWG	MOTION RTE
111	A	ACCESS CONTROL SYSTEM (ACS) SLAVE CONTROLLER	ELECTRICAL ROOM	1-21? EMT	ACS SLAVE 2	ACS PSU	R90	2	14 AWG	24 VDC POWER
	B			1-21? EMT		ACS SLAVE 2	BELDEN	1-PAIR	18 AWG	RS 485 COMMUNICATIONS
	C		HEADWORKS	1-27? RIGID ALUMINUM		DOOR 105	HONEYWELL 3206	6	22 AWG	CARD READER
							R90	2	14 AWG	PNEUMATIC STRIKE
							HONEYWELL 3102	2	22 AWG	DOOR CONTACT
							HONEYWELL 3102	2	22 AWG	PUSH TO EXIT BUTTON

NOTES:

1. FOR INFORMATION REGARDING GENERAL NOTES, UTILITIES, ABBREVIATIONS AND SYMBOLS, REFER TO THE LEGEND DRAWINGS.
2. THE CONDUIT AND CABLE SCHEDULE IS INTENDED TO SHOW THE MAJORITY OF THE POWER AND INSTRUMENTATION CABLE RUNS. INSTALL AND CONNECT ALL CABLES AND CONDUIT TO PROVIDE A COMPLETE AND OPERATIONAL SYSTEM.
3. SEE ELECTRICAL PANEL AND MECHANICAL EQUIPMENT SCHEDULES FOR ADDITIONAL WIRING REQUIREMENTS.
4. LIKE VOLTAGE WIRING CAN BE COMBINED IN COMMON CONDUIT PROVIDING MINIMUM 25% SPARE IN ACCOUNTED FOR IN ADD IN TO CEC CONDUIT FILL REQUIREMENTS. SEPARATE CONDUITS ARE REQUIRED FOR 120VAC, 24VDC, ANALOG SIGNALS, COMMUNICATION.
5. ALL IN CONCRETE SLAB RIGID ALUMINUM (ALUM) CONDUIT TO HAVE OUTSIDE OF CONDUIT COVERED WITH CORROSION PROTECTIVE COATING BITUMASTIC, ASPHALT BASED PAINT OR PVC COATING.
6. IN CONCRETE SLAB CONDUITS TO BE RPVC OR RIGID ALUMINUM.
7. IN CEILING CONDUITS TO BE EMT.
8. SURFACE MOUNT CONDUITS TO BE RPVC AND ARE ONLY PERMITTED FOR VERTICAL RUNS INTO CEILING SPACE AND HORIZONTAL RUNS LESS THAN 600. INSTALL ALL CONDUITS IN WALLS, CEILINGS AND FLOORS UNLESS OTHERWISE INDICATED.
9. ALL CABLING SIZE BASED ON 75° TERMINATION TEMPERATURE.
10. PROVIDE AND INSTALL APPROPRIATELY SIZED GROUND CABLE FOR ALL CABLE RUNS.
11. ALL CABLES ARE TO BE COPPER UNLESS OTHERWISE NOTED.
12. CONTRACTOR TO LABEL ALL CONTROL AND INSTRUMENTATION WIRING AS PER DETAIL 3 ON E5.1.
13. CONTRACTOR TO LABEL ALL POWER CONDUIT AS PER DETAIL 4 ON E5.1.
14. WHERE CONDUIT AND CABLE IS MARKED FUTURE, CONTRACTOR IS TO INSTALL ONLY THE INDICATED CONDUIT BETWEEN THE FUTURE DEVICE AND THE CONDUIT SOURCE.

THIS DRAWING MAY HAVE BEEN MODIFIED FROM ITS ORIGINAL SIZE. ALL SCALE NOTATIONS INDICATED ARE BASED ON 11"x17" FORMAT DRAWINGS

ISSUE	YY-MM-DD	REVISION
2	21-01-15	FOR CONSTRUCTION
1	20-10-15	FOR TENDER

Association of Professional Engineers & Geoscientists of Saskatchewan
CERTIFICATE OF AUTHORIZATION
MPE Engineering Ltd.
Number C1334
Permission to Consult held by:
Discipline: ELECTRICAL — Sk. Reg. No.: 32675 — Signature

PROFESSIONAL ENGINEER
R.G. OFSTIE
MEMBER 32675
2021-01-22
YR. MN. DAY.
SASKATCHEWAN

MPE Engineering Ltd.

ENGLISH RIVER ENTERPRISES PROPERTY MANAGEMENT LP

WASTEWATER TREATMENT PLANT
ELECTRICAL
CABLE AND CONDUIT SCHEDULE

DESIGNED	R.G.O	JOB	7603-002-00
DRAWN	T.S.	SCALE	N.T.S.
DATE	NOVEMBER 2020	DRAWING	E2.5

CONDUIT AND CABLE SCHEDULE

COND. No.	COND. TAG	DESCRIPTION	LOCATION	CONDUIT SIZE AND TYPE	TAG / FROM	TO	WIRE TYPE	No. OF WIRES	WIRE SIZE	REMARKS
112	A	ACCESS CONTROL SYSTEM (ACS) SLAVE CONTROLLER	ELECTRICAL ROOM	1-21? EMT	ACS SLAVE 3	ACS PSU	R90	2	14 AWG	24 VDC POWER
	B			1-21? EMT		ACS SLAVE 6	BELDEN	1-PAIR	18 AWG	RS 485 COMMUNICATIONS
	C		HEADWORKS	1-21? RIGID ALUMINUM		OVERHEAD DOOR 104	HONEYWELL 3102	2	22 AWG	DOOR CONTACT
	D		TREATMENT ROOM	1-21? RPVC		OVERHEAD DOOR 102	HONEYWELL 3102	2	22 AWG	DOOR CONTACT
	E		LAB	1-21? RPVC - TRANSITION TO 1-21? EMT IN OFFICE AREAS		OFFICE MOTION DETECTOR	HONEYWELL 3104	4	22 AWG	MOTION DETECTOR
	F		OFFICE	1-21? RPVC - TRANSITION TO 1-21? EMT IN OFFICE AREAS		LAB MOTION DETECTOR	HONEYWELL 3104	4	22 AWG	MOTION MOTION DETECTOR
113	A	SMOKE DETECTOR	ELECTRICAL ROOM	1-21? RPVC	SD 9914C	CP-2	R90	2	14 AWG	24 VDC POWER
							R90	2	14 AWG	24 VDC STATUS
114	A	TEMPERATURE SWITCH HIGH	ELECTRICAL ROOM	1-21? RPVC	TSH 9915C	CP-2	R90	2	14 AWG	24 VDC STATUS
115	A	SMOKE DETECTOR	LABORATORY	1-21? EMT	SD 9914B	CP-2	R90	2	14 AWG	24 VDC POWER
							R90	2	14 AWG	24 VDC STATUS
116	A	TEMPERATURE SWITCH HIGH	LABORATORY	1-21? EMT	TSH 9915B	CP-2	R90	2	14 AWG	24 VDC STATUS
117	A	SMOKE DETECTOR	OFFICE	1-21? EMT	SD 9914D	CP-2	R90	2	14 AWG	24 VDC POWER
							R90	2	14 AWG	24 VDC STATUS
118	A	TEMPERATURE SWITCH HIGH	OFFICE	1-21? EMT	TSH 9915D	CP-2	R90	2	14 AWG	24 VDC STATUS
119	A	SMOKE DETECTOR	MECHANICAL ROOM	1-21? EMT	SD 9914A	CP-2	R90	2	14 AWG	24 VDC POWER
							R90	2	14 AWG	24 VDC STATUS
120	A	TEMPERATURE SWITCH HIGH	MECHANICAL ROOM	1-21? EMT	TSH 9915A	CP-2	R90	2	14 AWG	24 VDC STATUS
121	A	CONDUCTIVITY LEVEL SWITCH	MECHANICAL ROOM	1-21? EMT	LS 9917A RELAY	CP-2	R90	2	14 AWG	120 VAC POWER
	B			1-21? EMT			R90	2	14 AWG	24 VDC STATUS
	C			N/A		LS 9917A PROBES	PRE-MANUFACTURED CABLES			PROBE WIRING
124	A	TEMPERATURE TRANSMITTER	WWTP EXTERIOR	1-21? EMT	TT 9912	CP-2	BELDEN	1-PAIR	18 AWG	ANALOG STATUS - TEMPERATURE
125	A	MAKE UP AIR UNIT	WWTP EXTERIOR	TECK	MUA 101	MCC-1	SEE MECHANICAL SCHEDULE			
	B			TECK		CP-2	R90	3	14 AWG	24 VDC STATUS
126	A	EXHAUST FAN	WWTP EXTERIOR	TECK	EF 101	FVNR EF 101	SEE MECHANICAL SCHEDULE			
	B			TECK		CP-2	R90	3	14 AWG	24 VDC STATUS
127	A	EXHAUST FAN	WWTP EXTERIOR	TECK	EF 102	FVNR EF 102	SEE MECHANICAL SCHEDULE			
	B			TECK		CP-2	R90	3	14 AWG	24 VDC STATUS
128	A	PERIMETER GATE OPERATOR	WWTP EXTERIOR	TECK	PERIMETER GATE OPERATOR	PANEL A	R90	3	12 AWG	208 VAC POWER
	B			TECK		CP-2	R90	4	14 AWG	24 VAC CONTROL
	C			TECK		KEYPAD PEDESTAL	R90	2	14 AWG	24 VAC POWER
	D			TECK			BELDEN	1-PAIR	18 AWG	GATE OPEN COMMAND
	E			TECK		DETECTION LOOP 1	PRE-MANUFACTURED CABLE			VEHICLE DETECTION LOOP
	F			TECK		DETECTION LOOP 2	PRE-MANUFACTURED CABLE			VEHICLE DETECTION LOOP
	G			TECK		NETWORK RACK DATA PATCH PANEL	1-CAT 6 ETHERNET			ETHERNET COMMUNICATIONS (SPARE)
129	A	TRANSFORMER	ELECTRICAL ROOM	TECK	T-101	MCC-1	R90	3	3 AWG	600 VAC POWER
	B			TECK		PANEL A	R90	4	350 KCMIL	120/208 VAC POWER
130	A	SEPTAGE RECEIVING STATION	EXTERIOR	TECK	SEPTAGE RECEIVING STATION	PANEL A	R90	3	2 AWG	120/208 VAC POWER

CONDUIT AND CABLE SCHEDULE

COND. No.	COND. TAG	DESCRIPTION	LOCATION	CONDUIT SIZE AND TYPE	TAG / FROM	TO	WIRE TYPE	No. OF WIRES	WIRE SIZE	REMARKS
200	A	VARIABLE FREQUENCY DRIVE (VFD)	TREATMENT ROOM	1-35? RPVC IN SLAB	VFD 6101	BL 6101	R90	3	12 AWG	600 VAC POWER
	B			1-21? RPVC IN SLAB		ES 6101	R90	4	14 AWG	120 VAC EMERGENCY STOP STATUS
	C			TECK		NETWORK RACK DATA PATCH PANEL	1-SHEILDED CAT 6 ETHERNET			ETHERNET/IP COMMUNICATIONS
	D			TECK		CP-1	R90	2	14 AWG	120 VAC STATUS
	E	FLOW SWITCH LOW		1-35? RPVC IN SLAB	FSL 6101		R90	3	14 AWG	24 VDC STATUS AND POWER
201	A	VARIABLE FREQUENCY DRIVE (VFD)	TREATMENT ROOM	1-35? RPVC IN SLAB	VFD 6102	BL 6102	R90	3	12 AWG	600 VAC POWER
	B			1-21? RPVC IN SLAB		ES 6102	R90	4	14 AWG	120 VAC EMERGENCY STOP STATUS
	C			TECK		NETWORK RACK DATA PATCH PANEL	1-SHEILDED CAT 6 ETHERNET			ETHERNET/IP COMMUNICATIONS
	D			TECK		CP-1	R90	2	14 AWG	120 VAC STATUS
	E	FLOW SWITCH LOW		1-35? RPVC IN SLAB	FSL 6102		R90	3	14 AWG	24 VDC STATUS AND POWER
202	A	VARIABLE FREQUENCY DRIVE (VFD)	TREATMENT ROOM	1-35? RPVC IN SLAB	VFD 6201	BL 6201	R90	3	12 AWG	600 VAC POWER
	B			1-21? RPVC IN SLAB		ES 6201	R90	4	14 AWG	120 VAC EMERGENCY STOP STATUS
	C			TECK		NETWORK RACK DATA PATCH PANEL	1-SHEILDED CAT 6 ETHERNET			ETHERNET/IP COMMUNICATIONS
	D			TECK		CP-1	R90	2	14 AWG	120 VAC STATUS
	E	FLOW SWITCH LOW		1-35? RPVC IN SLAB	FSL 6201		R90	3	14 AWG	24 VDC STATUS AND POWER

NOTES:

1. FOR INFORMATION REGARDING GENERAL NOTES, UTILITIES, ABBREVIATIONS AND SYMBOLS, REFER TO THE LEGEND DRAWINGS.
2. THE CONDUIT AND CABLE SCHEDULE IS INTENDED TO SHOW THE MAJORITY OF THE POWER AND INSTRUMENTATION CABLE RUNS. INSTALL AND CONNECT ALL CABLES AND CONDUIT TO PROVIDE A COMPLETE AND OPERATIONAL SYSTEM.
3. SEE ELECTRICAL PANEL AND MECHANICAL EQUIPMENT SCHEDULES FOR ADDITIONAL WIRING REQUIREMENTS.
4. LIKE VOLTAGE WIRING CAN BE COMBINED IN COMMON CONDUIT PROVIDING MINIMUM 25% SPARE IN ACCOUNTED FOR IN ADD IN TO CEC CONDUIT FILL REQUIREMENTS. SEPARATE CONDUITS ARE REQUIRED FOR 120VAC, 24VDC, ANALOG SIGNALS, COMMUNICATION.
5. ALL IN CONCRETE SLAB RIGID ALUMINUM (ALUM) CONDUIT TO HAVE OUTSIDE OF CONDUIT COVERED WITH CORROSION PROTECTIVE COATING BITUMASTIC, ASPHALT BASED PAINT OR PVC COATING.
6. IN CONCRETE SLAB CONDUITS TO BE RPVC OR RIGID ALUMINUM.
7. IN CEILING CONDUITS TO BE EMT.
8. SURFACE MOUNT CONDUITS TO BE RPVC AND ARE ONLY PERMITTED FOR VERTICAL RUNS INTO CEILING SPACE AND HORIZONTAL RUNS LESS THAN 600. INSTALL ALL CONDUITS IN WALLS, CEILINGS AND FLOORS UNLESS OTHERWISE INDICATED.
9. ALL CABLING SIZE BASED ON 75° TERMINATION TEMPERATURE.
10. PROVIDE AND INSTALL APPROPRIATELY SIZED GROUND CABLE FOR ALL CABLE RUNS.
11. ALL CABLES ARE TO BE COPPER UNLESS OTHERWISE NOTED.
12. CONTRACTOR TO LABEL ALL CONTROL AND INSTRUMENTATION WIRING AS PER DETAIL 3 ON E5.1.
13. CONTRACTOR TO LABEL ALL POWER CONDUIT AS PER DETAIL 4 ON E5.1.
14. WHERE CONDUIT AND CABLE IS MARKED FUTURE, CONTRACTOR IS TO INSTALL ONLY THE INDICATED CONDUIT BETWEEN THE FUTURE DEVICE AND THE CONDUIT SOURCE.

THIS DRAWING MAY HAVE BEEN MODIFIED FROM ITS ORIGINAL SIZE. ALL SCALE NOTATIONS INDICATED ARE BASED ON 11"x17" FORMAT DRAWINGS

ISSUE	YY-MM-DD	REVISION
2	21-01-15	FOR CONSTRUCTION
1	20-10-15	FOR TENDER

Association of Professional Engineers & Geoscientists of Saskatchewan
CERTIFICATE OF AUTHORIZATION
MPE Engineering Ltd.
Number C1334
Permission to Consult held by:

Discipline	Sk. Reg. No.	Signature
ELECTRICAL	32675	

PROFESSIONAL ENGINEER
R.G. OFSTIE
MEMBER 32675
2021-01-22
YR. MN. DAY.
SASKATCHEWAN

MPE Engineering Ltd.

ENGLISH RIVER ENTERPRISES PROPERTY MANAGEMENT LP

WASTEWATER TREATMENT PLANT
ELECTRICAL
CABLE AND CONDUIT SCHEDULE

DESIGNED	R.G.O	JOB	7603-002-00
DRAWN	T.S.	SCALE	N.T.S.
DATE	NOVEMBER 2020	DRAWING	E2.6

CONDUIT AND CABLE SCHEDULE

COND. No.	COND. TAG	DESCRIPTION	LOCATION	CONDUIT SIZE AND TYPE	TAG / FROM	TO	WIRE TYPE	No. OF WIRES	WIRE SIZE	REMARKS
203	A	VARIABLE FREQUENCY DRIVE (VFD)	TREATMENT ROOM	1-35? RPVC IN SLAB	VFD 6301	BL 6301	R90	3	12 AWG	600 VAC POWER
	B			1-21? RPVC IN SLAB		ES 6301	R90	4	14 AWG	120 VAC EMERGENCY STOP STATUS
	C			TECK		NETWORK RACK DATA PATCH PANEL	1-SHEILDED CAT 6 ETHERNET			ETHERNET/IP COMMUNICATIONS
	D			TECK		CP-1	R90	2	14 AWG	120 VAC STATUS
	E	FLOW SWITCH LOW		1-35? RPVC IN SLAB	FSL 6301		R90	3	14 AWG	24 VDC STATUS AND POWER
204	A	VARIABLE FREQUENCY DRIVE (VFD)	TREATMENT ROOM	1-35? RPVC IN SLAB	VFD 6302	BL 6302	R90	3	12 AWG	600 VAC POWER
	B			1-21? RPVC IN SLAB		ES 6302	R90	4	14 AWG	120 VAC EMERGENCY STOP STATUS
	C			TECK		NETWORK RACK DATA PATCH PANEL	1-SHEILDED CAT 6 ETHERNET			ETHERNET/IP COMMUNICATIONS
	D			TECK		CP-1	R90	2	14 AWG	120 VAC STATUS
	E	FLOW SWITCH LOW		1-35? RPVC IN SLAB	FSL 6302		R90	3	14 AWG	24 VDC STATUS AND POWER
205	A	VARIABLE FREQUENCY DRIVE (VFD)	TREATMENT ROOM	1-35? RPVC IN SLAB	VFD 6303	BL 6303	R90	3	12 AWG	600 VAC POWER
	B			1-21? RPVC IN SLAB		ES 6303	R90	4	14 AWG	120 VAC EMERGENCY STOP STATUS
	C			TECK		NETWORK RACK DATA PATCH PANEL	1-SHEILDED CAT 6 ETHERNET			ETHERNET/IP COMMUNICATIONS
	D			TECK		CP-1	R90	2	14 AWG	120 VAC STATUS
	E	FLOW SWITCH LOW		1-35? RPVC IN SLAB	FSL 6303		R90	3	14 AWG	24 VDC STATUS AND POWER
206	A	VARIABLE FREQUENCY DRIVE (VFD)	TREATMENT ROOM	1-21? RPVC IN SLAB	VFD 3101	RDT 3101	R90	3	12 AWG	600 VAC POWER
	B			1-21? RPVC IN SLAB		ES 3101	R90	4	14 AWG	120 VAC EMERGENCY STOP STATUS
	C			TECK		NETWORK RACK DATA PATCH PANEL	1-SHEILDED CAT 6 ETHERNET			ETHERNET/IP COMMUNICATIONS
	D			TECK		CP-2	R90	2	14 AWG	120 VAC STATUS
207	A	MAGNETIC FLOW METER - REMOTE DISPLAY	TREATMENT ROOM	1-21? RPVC	FIT 3120	FE 3120	PRE-MANUFACTURED CABLE			ANALOG STATUS
	B			1-21? RPVC		CP-1	BELDEN	1-PAIR	18 AWG	HART STATUS - FLOW
	C			1-21? RPVC			R90	2	14 AWG	120 VAC POWER
208	A	PNUEMATIC FLOW VALVE (FV)	TREATMENT ROOM	1-21? RPVC IN SLAB	FV 3112	CP-1	R90	2	14 AWG	24 VDC CONTROL
	B			1-21? RPVC IN SLAB	ZS 3112		R90	4	14 AWG	24 VDC STATUS
209	A	PRESSURE SWITCH LOW (PSL)	TREATMENT ROOM	1-21? RPVC IN SLAB	PSL 3131	CP-2	R90	2	14 AWG	120 VAC STATUS
210	A	PNEUMATIC FLOW VALVE (FV)	TREATMENT ROOM	1-21? RPVC IN SLAB	FV 7360	CP-2	R90	2	14 AWG	24 VDC CONTROL
211	A	SOLENOID FLOW VALVE (FV)	TREATMENT ROOM	1-21? RPVC IN SLAB	FV 3168	CP-2	R90	2	14 AWG	24 VDC CONTROL
213	A	SMOKE DETECTOR	TREATMENT ROOM	TECK	SD 3414	CP-2	R90	2	14 AWG	24 VDC POWER
							R90	2	14 AWG	24 VDC STATUS
214	A	TEMPERATURE SWITCH HIGH	TREATMENT ROOM	TECK	TSH 3415	CP-2	R90	2	14 AWG	24 VDC STATUS
215	A	TEMPERATURE TRANSMITTER	TREATMENT ROOM	TECK	TT 3412	CP-2	BELDEN	1-PAIR	18 AWG	ANALOG STATUS
216	A	CONDUCTIVITY LEVEL SWITCH	TREATMENT ROOM	TECK	LS 3417 RELAY	CP-2	R90	2	14 AWG	120 VAC POWER
	B			TECK			R90	2	14 AWG	24 VDC STATUS
	C			N/A		LS 3417 PROBES	PRE-MANUFACTURED CABLES			PROBE WIRING
217	A	LEVEL SWITCH(S)	TREATMENT ROOM	TECK	LSH 3226 / LSHH 3226B	CP-2	R90	4	14 AWG	24 VDC STATUS
218	A	LEVEL INDICATING TRANSMITTER - REMOTE DISPLAY	TREATMENT ROOM	1-21? RPVC	LIT 3226	LE 3226	PRE-MANUFACTURED CABLE			ELEMENT CABLE - LEVEL
	B			TECK		CP-2	R90	2	14 AWG	24 VDC POWER
	C			TECK			BELDEN	1-PAIR	18 AWG	ANALOG STATUS - LEVEL
219	A	LEVEL SWITCH(S)	TREATMENT ROOM	TECK	LSH 8126 / LSHH 8126B	CP-2	R90	4	14 AWG	24 VDC STATUS
220	A	LEVEL INDICATING TRANSMITTER - REMOTE DISPLAY	TREATMENT ROOM	1-21? RPVC	LIT 8126	LE 8126	PRE-MANUFACTURED CABLE			ELEMENT CABLE - LEVEL
	B			TECK		CP-2	R90	2	14 AWG	24 VDC POWER
	C			TECK			BELDEN	1-PAIR	18 AWG	ANALOG STATUS - LEVEL
221	A	REFRIGERATED SAMPLER UNIT	TREATMENT ROOM	TECK	RFS 5900	PANEL A	R90	2	12 AWG	120 VAC POWER
	B			TECK		CP-2	R90	4	14 AWG	24 VDC STATUS AND CONTROL
222	A	LEVELTRANSMITTER	TREATMENT ROOM	TECK	LT 8126	CP-2	BELDEN	2	14 AWG	ANALOG STATUS - LEVEL
223	A	REFRIGERATED SAMPLER UNIT	TREATMENT ROOM	TECK	RFS 2900	PANEL A	R90	2	12 AWG	120 VAC POWER
	B			TECK		CP-2	R90	4	14 AWG	24 VDC STATUS AND CONTROL

NOTES:

1. FOR INFORMATION REGARDING GENERAL NOTES, UTILITIES, ABBREVIATIONS AND SYMBOLS, REFER TO THE LEGEND DRAWINGS.
2. THE CONDUIT AND CABLE SCHEDULE IS INTENDED TO SHOW THE MAJORITY OF THE POWER AND INSTRUMENTATION CABLE RUNS. INSTALL AND CONNECT ALL CABLES AND CONDUIT TO PROVIDE A COMPLETE AND OPERATIONAL SYSTEM.
3. SEE ELECTRICAL PANEL AND MECHANICAL EQUIPMENT SCHEDULES FOR ADDITIONAL WIRING REQUIREMENTS.
4. LIKE VOLTAGE WIRING CAN BE COMBINED IN COMMON CONDUIT PROVIDING MINIMUM 25% SPARE IN ACCOUNTED FOR IN ADD IN TO CEC CONDUIT FILL REQUIREMENTS. SEPARATE CONDUITS ARE REQUIRED FOR 120VAC, 24VDC, ANALOG SIGNALS, COMMUNICATION.
5. ALL IN CONCRETE SLAB RIGID ALUMINUM (ALUM) CONDUIT TO HAVE OUTSIDE OF CONDUIT COVERED WITH CORROSION PROTECTIVE COATING BITUMASTIC, ASPHALT BASED PAINT OR PVC COATING.
6. IN CONCRETE SLAB CONDUITS TO BE RPVC OR RIGID ALUMINUM.
7. IN CEILING CONDUITS TO BE EMT.
8. SURFACE MOUNT CONDUITS TO BE RPVC AND ARE ONLY PERMITTED FOR VERTICAL RUNS INTO CEILING SPACE AND HORIZONTAL RUNS LESS THAN 600. INSTALL ALL CONDUITS IN WALLS, CEILINGS AND FLOORS UNLESS OTHERWISE INDICATED.
9. ALL CABLING SIZE BASED ON 75° TERMINATION TEMPERATURE.
10. PROVIDE AND INSTALL APPROPRIATELY SIZED GROUND CABLE FOR ALL CABLE RUNS.
11. ALL CABLES ARE TO BE COPPER UNLESS OTHERWISE NOTED.
12. CONTRACTOR TO LABEL ALL CONTROL AND INSTRUMENTATION WIRING AS PER DETAIL 3 ON E5.1.
13. CONTRACTOR TO LABEL ALL POWER CONDUIT AS PER DETAIL 4 ON E5.1.
14. WHERE CONDUIT AND CABLE IS MARKED FUTURE, CONTRACTOR IS TO INSTALL ONLY THE INDICATED CONDUIT BETWEEN THE FUTURE DEVICE AND THE CONDUIT SOURCE.

THIS DRAWING MAY HAVE BEEN MODIFIED FROM ITS ORIGINAL SIZE. ALL SCALE NOTATIONS INDICATED ARE BASED ON 11"x17" FORMAT DRAWINGS

ISSUE	YY-MM-DD	REVISION
2	21-01-15	FOR CONSTRUCTION
1	20-10-15	FOR TENDER

Association of Professional Engineers & Geoscientists of Saskatchewan
CERTIFICATE OF AUTHORIZATION
MPE Engineering Ltd.
Number C1334
Permission to Consult held by:

Discipline	Sk. Reg. No.	Signature
ELECTRICAL	32675	

PROFESSIONAL ENGINEER
R.G. DESTIE
MEMBER 32675
2021-01-22
YR. MN. DAY.
SASKATCHEWAN

MPE Engineering Ltd.

ENGLISH RIVER ENTERPRISES
PROPERTY MANAGEMENT LP

WASTEWATER TREATMENT PLANT
ELECTRICAL
CABLE AND CONDUIT SCHEDULE

DESIGNED	R.G.O	JOB	7603-002-00
DRAWN	T.S.	SCALE	N.T.S.
DATE	NOVEMBER 2020	DRAWING	E2.7

CONDUIT AND CABLE SCHEDULE

COND. No.	COND. TAG	DESCRIPTION	LOCATION	CONDUIT SIZE AND TYPE	TAG / FROM	TO	WIRE TYPE	No. OF WIRES	WIRE SIZE	REMARKS
300	A	ROTARY DRUM THICKENER POLYMER SYSTEM	TREATMENT ROOM	1-21? RPVC IN SLAB	CP 7341	PANEL A	R90	2	12 AWG	120 VAC POWER
	B			1-27? RPVC IN SLAB		CP-2	R90	16	14 AWG	24 VDC STATUS AND CONTROL
	C			1-21? RPVC IN SLAB			BELDEN	3-PAIRS	18 AWG	ANALOG CONTROL
301	A	CHEMICAL METERING PUMP (SODIUM HYPOCHLORITE)	TREATMENT ROOM	TECK	P 7741A	PANEL A	R90	2	12 AWG	120 VAC POWER
	B			TECK		CP-1	R90	2	14 AWG	24 VDC STATUS
	C			TECK			BELDEN	1-PAIR	18 AWG	ANALOG CONTROL
302	A	CHEMICAL METERING PUMP (SODIUM HYPOCHLORITE)	TREATMENT ROOM	TECK	P 7741B	PANEL A	R90	2	12 AWG	120 VAC POWER
	B			TECK		CP-1	R90	2	14 AWG	24 VDC STATUS
	C			TECK			BELDEN	1-PAIR	18 AWG	ANALOG CONTROL
303	A	CHEMICAL METERING PUMP (CITRIC ACID)	TREATMENT ROOM	TECK	P 7541A	PANEL A	R90	2	12 AWG	120 VAC POWER
	B			TECK		CP-1	R90	2	14 AWG	24 VDC STATUS
	C			TECK			BELDEN	1-PAIR	18 AWG	ANALOG CONTROL
304	A	CHEMICAL METERING PUMP (CITRIC ACID)	TREATMENT ROOM	TECK	P 7541B	CP-1	R90	2	12 AWG	120 VAC POWER
	B			TECK			R90	2	14 AWG	24 VDC STATUS
	C			TECK			BELDEN	1-PAIR	18 AWG	ANALOG CONTROL
305	A	CHEMICAL METERING PUMP (ALUM)	TREATMENT ROOM	TECK	P 7141A	CP-1	R90	2	12 AWG	120 VAC POWER
	B			TECK			R90	2	14 AWG	24 VDC STATUS
	C			TECK			BELDEN	1-PAIR	18 AWG	ANALOG CONTROL
306	A	CHEMICAL METERING PUMP (ALUM)	TREATMENT ROOM	TECK	P 7141B	CP-1	R90	2	12 AWG	120 VAC POWER
	B			TECK			R90	2	14 AWG	24 VDC STATUS
	C			TECK			BELDEN	1-PAIR	18 AWG	ANALOG CONTROL
307	A	CHEMICAL METERING PUMP (SODIUM HYDROXIDE)	TREATMENT ROOM	TECK	P 7641A	CP-1	R90	2	12 AWG	120 VAC POWER (FUTURE)
	B			TECK			R90	2	14 AWG	24 VDC STATUS (FUTURE)
	C			TECK			BELDEN	1-PAIR	18 AWG	ANALOG CONTROL (FUTURE)
308	A	CHEMICAL METERING PUMP (SODIUM HYDROXIDE)	TREATMENT ROOM	TECK	P 7641A	CP-1	R90	2	12 AWG	120 VAC POWER (FUTURE)
	B			TECK			R90	2	14 AWG	24 VDC STATUS (FUTURE)
	C			TECK			BELDEN	1-PAIR	18 AWG	ANALOG CONTROL (FUTURE)
311	A	WEIGHT INDICATING TRANSMITTER - REMOTE DISPLAY	TREATMENT ROOM	TECK	WIT 7739 / 7539	WE 7739	PRE-MANUFACTURED CABLE			ELEMENT CABLE - LOAD CELLS
	B			TECK		WE 7539	PRE-MANUFACTURED CABLE			ELEMENT CABLE - LOAD CELLS
	C			TECK		CP-2	R90	2	14 AWG	120 VAC POWER
	D			TECK			BELDEN	2-PAIRS	18 AWG	ANALOG STATUS - WEIGHT
312	A	LEVEL SWITCH(S)	TREATMENT ROOM	TECK	LSL 7739	CP-1	R90	4	14 AWG	24 VDC POWER AND STATUS
313	A	LEVEL SWITCH(S)	TREATMENT ROOM	TECK	LSL 7539	RIO-1	R90	4	14 AWG	24 VDC POWER AND STATUS
314	A	WEIGHT INDICATING TRANSMITTER - REMOTE DISPLAY	TREATMENT ROOM	TECK	WIT 7132 / 7641	WE 7132	PRE-MANUFACTURED CABLE			ELEMENT CABLE - LOAD CELLS
	B			TECK		WE 7641	PRE-MANUFACTURED CABLE			ELEMENT CABLE - LOAD CELLS (FUTURE)
	C			TECK		CP-2	R90	2	14 AWG	120 VAC POWER
	D			TECK			BELDEN	2-PAIRS	18 AWG	ANALOG STATUS - WEIGHT
315	A	LEVEL SWITCH(S)	TREATMENT ROOM	TECK	LSL 7132	CP-1	R90	4	14 AWG	24 VDC POWER AND STATUS
316	A	LEVEL SWITCH(S)	TREATMENT ROOM	TECK	LSL 7641	CP-1	R90	4	14 AWG	24 VDC POWER AND STATUS (FUTURE)
317	A	MAGNETIC FLOW METER - REMOTE DISPLAY	TREATMENT ROOM	TECK	FIT 7120	FE 7120	PRE-MANUFACTURED CABLE			ANALOG STATUS
	B			TECK		CP-1	BELDEN	1-PAIR	18 AWG	HART STATUS - FLOW
	C			TECK			R90	2	14 AWG	120 VAC POWER
318	A	MAGNETIC FLOW METER - REMOTE DISPLAY	TREATMENT ROOM	TECK	FIT 7320	FE 7320	PRE-MANUFACTURED CABLE			ANALOG STATUS
	B			TECK		CP-2	BELDEN	1-PAIR	18 AWG	HART STATUS - FLOW
	C			TECK			R90	2	14 AWG	120 VAC POWER
320	A	LEVEL SWITCH(S)	TREATMENT ROOM	TECK	LSLL 7326	CP-2	R90	4	14 AWG	24 VDC POWER AND STATUS
321	A	WEIGHT INDICATING TRANSMITTER - REMOTE DISPLAY	TREATMENT ROOM	TECK	WIT 7339	WE 7339	PRE-MANUFACTURED CABLE			ELEMENT CABLE - LOAD CELLS
	B			TECK		CP-2	R90	2	14 AWG	120 VAC POWER
	C			TECK			BELDEN	1-PAIR	18 AWG	ANALOG STATUS - WEIGHT

NOTES:

1. FOR INFORMATION REGARDING GENERAL NOTES, UTILITIES, ABBREVIATIONS AND SYMBOLS, REFER TO THE LEGEND DRAWINGS.
2. THE CONDUIT AND CABLE SCHEDULE IS INTENDED TO SHOW THE MAJORITY OF THE POWER AND INSTRUMENTATION CABLE RUNS. INSTALL AND CONNECT ALL CABLES AND CONDUIT TO PROVIDE A COMPLETE AND OPERATIONAL SYSTEM.
3. SEE ELECTRICAL PANEL AND MECHANICAL EQUIPMENT SCHEDULES FOR ADDITIONAL WIRING REQUIREMENTS.
4. LIKE VOLTAGE WIRING CAN BE COMBINED IN COMMON CONDUIT PROVIDING MINIMUM 25% SPARE IN ACCOUNTED FOR IN ADD IN TO CEC CONDUIT FILL REQUIREMENTS. SEPARATE CONDUITS ARE REQUIRED FOR 120VAC, 24VDC, ANALOG SIGNALS, COMMUNICATION.
5. ALL IN CONCRETE SLAB RIGID ALUMINUM (ALUM) CONDUIT TO HAVE OUTSIDE OF CONDUIT COVERED WITH CORROSION PROTECTIVE COATING BITUMASTIC, ASPHALT BASED PAINT OR PVC COATING.
6. IN CONCRETE SLAB CONDUITS TO BE RPVC OR RIGID ALUMINUM.
7. IN CEILING CONDUITS TO BE EMT.
8. SURFACE MOUNT CONDUITS TO BE RPVC AND ARE ONLY PERMITTED FOR VERTICAL RUNS INTO CEILING SPACE AND HORIZONTAL RUNS LESS THAN 600. INSTALL ALL CONDUITS IN WALLS, CEILINGS AND FLOORS UNLESS OTHERWISE INDICATED.
9. ALL CABLING SIZE BASED ON 75° TERMINATION TEMPERATURE.
10. PROVIDE AND INSTALL APPROPRIATELY SIZED GROUND CABLE FOR ALL CABLE RUNS.
11. ALL CABLES ARE TO BE COPPER UNLESS OTHERWISE NOTED.
12. CONTRACTOR TO LABEL ALL CONTROL AND INSTRUMENTATION WIRING AS PER DETAIL 3 ON E5.1.
13. CONTRACTOR TO LABEL ALL POWER CONDUIT AS PER DETAIL 4 ON E5.1.
14. WHERE CONDUIT AND CABLE IS MARKED FUTURE, CONTRACTOR IS TO INSTALL ONLY THE INDICATED CONDUIT BETWEEN THE FUTURE DEVICE AND THE CONDUIT SOURCE.

THIS DRAWING MAY HAVE BEEN MODIFIED FROM ITS ORIGINAL SIZE. ALL SCALE NOTATIONS INDICATED ARE BASED ON 11"x17" FORMAT DRAWINGS

ISSUE	YY-MM-DD	REVISION
2	21-01-15	FOR CONSTRUCTION
1	20-10-15	FOR TENDER

Association of Professional Engineers & Geoscientists of Saskatchewan
CERTIFICATE OF AUTHORIZATION
MPE Engineering Ltd.
Number C1334
Permission to Consult held by:
Discipline: ELECTRICAL Sk. Reg. No.: 32675 Signature

PROFESSIONAL ENGINEER R.G. DESTE MEMBER 32675 2021-01-22 YR MN DAY SASKATCHEWAN

MPE Engineering Ltd.

ENGLISH RIVER ENTERPRISES PROPERTY MANAGEMENT LP

WASTEWATER TREATMENT PLANT
ELECTRICAL
CABLE AND CONDUIT SCHEDULE

DESIGNED	R.G.O	JOB	7603-002-00
DRAWN	T.S.	SCALE	N.T.S.
DATE	NOVEMBER 2020	DRAWING	E2.8

CONDUIT AND CABLE SCHEDULE

COND. No.	COND. TAG	DESCRIPTION	LOCATION	CONDUIT SIZE AND TYPE	TAG / FROM	TO	WIRE TYPE	No. OF WIRES	WIRE SIZE	REMARKS
400	A	VARIABLE FREQUENCY DRIVE WITH MINICAS (VFD)	EFFLUENT CHAMBER	N/A	P 8101	PIN AND SLEEVE RECEPTACLE	3C + 1-PAIR PUMP CABLE		10 AWG	600 VAC POWER AND ANALOG STATUS
	B			TECK	VFD 8101		R90	3	10 AWG	600 VAC POWER
	C			TECK			BELDEN	1-PAIR	18 AWG	0-12 VDC ANALOG PUMP SENSORS
	D			TECK		NETWORK RACK DATA PATCH PANEL	1-SHIELDED CAT 6 ETHERNET			ETHERNET/IP COMMUNICATIONS
	E			TECK		ES 8101	R90	4	14 AWG	120 VAC EMERGENCY STOP STATUS
	F			TECK		CP-2	R90	2	14 AWG	120 VAC STATUS
	G			TECK			R90	3	14 AWG	24 VDC STATUS
401	A	VARIABLE FREQUENCY DRIVE WITH MINICAS (VFD)	EFFLUENT CHAMBER	N/A	P 8102	PIN AND SLEEVE RECEPTACLE	3C + 1-PAIR PUMP CABLE		10 AWG	600 VAC POWER AND ANALOG STATUS
	B			TECK	VFD 8102		R90	3	10 AWG	600 VAC POWER
	C			TECK			BELDEN	1-PAIR	18 AWG	0-12 VDC ANALOG PUMP SENSORS
	D			TECK		NETWORK RACK DATA PATCH PANEL	1-SHIELDED CAT 6 ETHERNET			ETHERNET/IP COMMUNICATIONS
	E			TECK		ES 8102	R90	4	14 AWG	120 VAC EMERGENCY STOP STATUS
	F			TECK		CP-2	R90	2	14 AWG	120 VAC STATUS
	G			TECK			R90	3	14 AWG	24 VDC STATUS
402	A	VARIABLE FREQUENCY DRIVE WITH MINICAS (VFD)	EQUALIZATION CHAMBER	N/A	P 1101	PIN AND SLEEVE RECEPTACLE	3C + 1-PAIR PUMP CABLE		12 AWG	600 VAC POWER AND ANALOG STATUS
	B			TECK	VFD 1101		R90	3	12 AWG	600 VAC POWER
	C			TECK			BELDEN	1-PAIR	18 AWG	0-12 VDC ANALOG PUMP SENSORS
	D			TECK		NETWORK RACK DATA PATCH PANEL	1-SHIELDED CAT 6 ETHERNET			ETHERNET/IP COMMUNICATIONS
	E			TECK		ES 1101	R90	4	14 AWG	120 VAC EMERGENCY STOP STATUS
	F			TECK		CP-2	R90	2	14 AWG	120 VAC STATUS
	G			TECK			R90	3	14 AWG	24 VDC STATUS
403	A	VARIABLE FREQUENCY DRIVE WITH MINICAS (VFD)	EQUALIZATION CHAMBER	N/A	P 1102	PIN AND SLEEVE RECEPTACLE	3C + 1-PAIR PUMP CABLE		12 AWG	600 VAC POWER AND ANALOG STATUS
	B			TECK	VFD 1102		R90	3	12 AWG	600 VAC POWER
	C			TECK			BELDEN	1-PAIR	18 AWG	0-12 VDC ANALOG PUMP SENSORS
	D			TECK		NETWORK RACK DATA PATCH PANEL	1-SHIELDED CAT 6 ETHERNET			ETHERNET/IP COMMUNICATIONS
	E			TECK		ES 1102	R90	4	14 AWG	120 VAC EMERGENCY STOP STATUS
	F			TECK		CP-2	R90	2	14 AWG	120 VAC STATUS
	G			TECK			R90	3	14 AWG	24 VDC STATUS
404	A	FULL VOLTAGE NON REVERSING STARTER WITH MINICAS (FVNR)	EQUALIZATION CHAMBER	N/A	MX 1012	PIN AND SLEEVE RECEPTACLE	3C + 1-PAIR PUMP CABLE		12 AWG	600 VAC POWER AND ANALOG STATUS
	B			TECK	FVNR 1012		R90	3	12 AWG	600 VAC POWER
	C			TECK			BELDEN	1-PAIR	18 AWG	0-12 VDC ANALOG PUMP SENSORS
	D			TECK		ES 1102	R90	4	14 AWG	120 VAC EMERGENCY STOP STATUS
	E			TECK		CP-2	R90	4	14 AWG	120 VAC STATUS AND CONTROL
	F			TECK			R90	8	14 AWG	24 VDC STATUS
405	A	VARIABLE FREQUENCY DRIVE (VFD)	PUMP ROOM	TECK	VFD 4901-1	P 4901-1	R90	3	12 AWG	600 VAC POWER
	B			TECK		ES 4901-1	R90	4	14 AWG	120 VAC EMERGENCY STOP STATUS
	C			TECK		NETWORK RACK DATA PATCH PANEL	1-SHEILDED CAT 6 ETHERNET			ETHERNET/IP COMMUNICATIONS
	D			TECK		CP-11	R90	2	14 AWG	120 VAC STATUS
406	A	VARIABLE FREQUENCY DRIVE (VFD)	PUMP ROOM	TECK	VFD 4901-2	P 4901-2	R90	3	12 AWG	600 VAC POWER
	B			TECK		ES 4901-2	R90	4	14 AWG	120 VAC EMERGENCY STOP STATUS
	C			TECK		NETWORK RACK DATA PATCH PANEL	1-SHEILDED CAT 6 ETHERNET			ETHERNET/IP COMMUNICATIONS
	D			TECK		CP-12	R90	2	14 AWG	120 VAC STATUS
407	A	VARIABLE FREQUENCY DRIVE (VFD)	PUMP ROOM	TECK	VFD 4611-1	P 4611-1	R90	3	12 AWG	600 VAC POWER
	B			TECK		ES 4611-1	R90	4	14 AWG	120 VAC EMERGENCY STOP STATUS
	C			TECK		NETWORK RACK DATA PATCH PANEL	1-SHEILDED CAT 6 ETHERNET			ETHERNET/IP COMMUNICATIONS
	D			TECK		CP-11	R90	4	14 AWG	120 VAC STATUS
408	A	VARIABLE FREQUENCY DRIVE (VFD)	PUMP ROOM	TECK	VFD 4611-2	P 4611-2	R90	3	12 AWG	600 VAC POWER
	B			TECK		ES 4611-2	R90	4	14 AWG	120 VAC EMERGENCY STOP STATUS
	C			TECK		NETWORK RACK DATA PATCH PANEL	1-SHEILDED CAT 6 ETHERNET			ETHERNET/IP COMMUNICATIONS
	D			TECK		CP-12	R90	4	14 AWG	120 VAC STATUS
409	A	AIR COMPRESSOR CONTROL PANEL	PUMP ROOM	TECK	CP 6008	MCC-1	R90	3	10 AWG	600 VAC POWER
	B			TECK		AC 6008A	R90	3	12 AWG	600 VAC POWER
	C			TECK		AC 6008B	R90	3	12 AWG	600 VAC POWER
	D			TECK		CP-1	R90	4	14 AWG	120 VAC CONTROL
	E			TECK			R90	12	14 AWG	24 VDC STATUS
410	A	FULL VOLTAGE NON REVERSING STARTER WITH MINICAS (FVNR)	ANOIXIC CHAMBER	N/A	MX 3011	PIN AND SLEEVE RECEPTACLE	3C + 1-PAIR PUMP CABLE		12 AWG	600 VAC POWER AND ANALOG STATUS
	B			TECK	FVNR 3011		R90	3	12 AWG	600 VAC POWER
	C			TECK			BELDEN	1-PAIR	18 AWG	0-12 VDC ANALOG PUMP SENSORS
	D			TECK		ES 3011	R90	4	14 AWG	120 VAC EMERGENCY STOP STATUS
	E			TECK		CP-2	R90	4	14 AWG	120 VAC STATUS AND CONTROL
	F			TECK			R90	8	14 AWG	24 VDC STATUS
411	A	UV REACTOR CONTROL POWER PANEL (CPP)	UV AREA	TECK	CPP 5155-1	PANEL A	R90	2	12 AWG	208 VAC POWER
	B			TECK		CP-1	R90	10	14 AWG	24VDC STATUS AND CONTROL
	C			TECK			BELDEN	2-PAIR	18 AWG	ANALOG STATUS
	D			TECK		NETWORK RACK DATA PATCH PANEL	1-SHIELDED CAT 6 ETHERNET			ETHERNET COMMUNICATION
	E			TECK		UVR 5155-1	PRE-MANUFACTURED			REACTOR POWER SUPPLY
	F			TECK			PRE-MANUFACTURED			REACTOR CONTROL

NOTES:

1. FOR INFORMATION REGARDING GENERAL NOTES, UTILITIES, ABBREVIATIONS AND SYMBOLS, REFER TO THE LEGEND DRAWINGS.
2. THE CONDUIT AND CABLE SCHEDULE IS INTENDED TO SHOW THE MAJORITY OF THE POWER AND INSTRUMENTATION CABLE RUNS. INSTALL AND CONNECT ALL CABLES AND CONDUIT TO PROVIDE A COMPLETE AND OPERATIONAL SYSTEM.
3. SEE ELECTRICAL PANEL AND MECHANICAL EQUIPMENT SCHEDULES FOR ADDITIONAL WIRING REQUIREMENTS.
4. LIKE VOLTAGE WIRING CAN BE COMBINED IN COMMON CONDUIT PROVIDING MINIMUM 25% SPARE IN ACCOUNTED FOR IN ADD IN TO CEC CONDUIT FILL REQUIREMENTS. SEPARATE CONDUITS ARE REQUIRED FOR 120VAC, 24VDC, ANALOG SIGNALS, COMMUNICATION.
5. ALL IN CONCRETE SLAB RIGID ALUMINUM (ALUM) CONDUIT TO HAVE OUTSIDE OF CONDUIT COVERED WITH CORROSION PROTECTIVE COATING BITUMASTIC, ASPHALT BASED PAINT OR PVC COATING.
6. IN CONCRETE SLAB CONDUITS TO BE RPVC OR RIGID ALUMINUM.
7. IN CEILING CONDUITS TO BE EMT.
8. SURFACE MOUNT CONDUITS TO BE RPVC AND ARE ONLY PERMITTED FOR VERTICAL RUNS INTO CEILING SPACE AND HORIZONTAL RUNS LESS THAN 600. INSTALL ALL CONDUITS IN WALLS, CEILINGS AND FLOORS UNLESS OTHERWISE INDICATED.
9. ALL CABLING SIZE BASED ON 75° TERMINATION TEMPERATURE.
10. PROVIDE AND INSTALL APPROPRIATELY SIZED GROUND CABLE FOR ALL CABLE RUNS.
11. ALL CABLES ARE TO BE COPPER UNLESS OTHERWISE NOTED.
12. CONTRACTOR TO LABEL ALL CONTROL AND INSTRUMENTATION WIRING AS PER DETAIL 3 ON E5.1.
13. CONTRACTOR TO LABEL ALL POWER CONDUIT AS PER DETAIL 4 ON E5.1.
14. WHERE CONDUIT AND CABLE IS MARKED FUTURE, CONTRACTOR IS TO INSTALL ONLY THE INDICATED CONDUIT BETWEEN THE FUTURE DEVICE AND THE CONDUIT SOURCE.

THIS DRAWING MAY HAVE BEEN MODIFIED FROM ITS ORIGINAL SIZE. ALL SCALE NOTATIONS INDICATED ARE BASED ON 11"x17" FORMAT DRAWINGS

ISSUE	YY-MM-DD	REVISION
2	21-01-15	FOR CONSTRUCTION
1	20-10-15	FOR TENDER

Association of Professional Engineers & Geoscientists of Saskatchewan
CERTIFICATE OF AUTHORIZATION
MPE Engineering Ltd.
Number C1334
Permission to Consult held by:

Discipline	Sk. Reg. No.	Signature
ELECTRICAL	32675	

PROFESSIONAL ENGINEER
R.G. OFSTIE
MEMBER 32675
2021-01-22
YR. MN. DAY.
SASKATCHEWAN

MPE Engineering Ltd.

ENGLISH RIVER ENTERPRISES PROPERTY MANAGEMENT LP

WASTEWATER TREATMENT PLANT
ELECTRICAL
CABLE AND CONDUIT SCHEDULE

DESIGNED	R.G.O	JOB	7603-002-00
DRAWN	T.S.	SCALE	N.T.S.
DATE	NOVEMBER 2020	DRAWING	E2.9

CONDUIT AND CABLE SCHEDULE

COND. No.	COND. TAG	DESCRIPTION	LOCATION	CONDUIT SIZE AND TYPE	TAG / FROM	TO	WIRE TYPE	No. OF WIRES	WIRE SIZE	REMARKS
412	A	UV REACTOR CONTROL POWER PANEL (CPP)	UV AREA	TECK	CPP 5155-2	PANEL A	R90	2	12 AWG	208 VAC POWER (FUTURE)
	B			TECK		CP-1	R90	5	14 AWG	24VDC STATUS AND CONTROL (FUTURE)
	C			TECK			BELDEN	2-PAIR	18 AWG	ANALOG STATUS (FUTURE)
	D			TECK		NETWORK RACK DATA PATCH PANEL	1-SHIELDED CAT 6 ETHERNET			ETHERNET COMMUNICATION (FUTURE)
	E			TECK		UVR 5155-2	PRE-MANUFACTURED			REACTOR POWER SUPPLY (FUTURE)
	F			TECK			PRE-MANUFACTURED			REACTOR CONTROL (FUTURE)
413	A	PNUEMATIC FLOW VALVE (FV)	PUMP ROOM	TECK	FV 5102	CP-1	R90	2	14 AWG	24 VDC CONTROL
	B			TECK	ZS 5102		R90	4	14 AWG	24 VDC STATUS
414	A	LEVEL INDICATING TRANSMITTER - INTEGRAL DISPLAY	PUMP ROOM	TECK	LIT 7932	CP-1	BELDEN	1-PAIR	18 AWG	ANALOG STATUS - LEVEL
415	A	PNEUMATIC FLOW VALVE (FV)	PUMP ROOM	TECK	FV 7960	CP-1	R90	2	14 AWG	24 VDC CONTROL
416	A	TEMPERATURE TRANSMITTER	PUMP ROOM	TECK	TT 5108	CP-1	BELDEN	1-PAIR	18 AWG	ANALOG STATUS
417	A	MAGNETIC FLOW METER - REMOTE DISPLAY	PUMP ROOM	TECK	FIT 5155	FE 5155	PRE-MANUFACTURED CABLE			ANALOG STATUS
	B			TECK		CP-1	BELDEN	1-PAIR	18 AWG	HART STATUS - FLOW
	C			TECK			R90	2	14 AWG	120 VAC POWER
418	A	ANALYZER INDICATING TRANSMITTER - REMOTE DISPLAY	PUMP ROOM	TECK	AIT 4624 / AIT 4625	AE 4625	BELDEN	1-PAIR	18 AWG	ELEMENT CABLE - H2S
	B			TECK		AE 4624	BELDEN	1-PAIR	18 AWG	ELEMENT CABLE - METHANE
	C			TECK		BCN 4625	R90	2	14 AWG	12 VDC POWER
	D			TECK		HN 4625	R90	2	14 AWG	12 VDC POWER
	E			TECK		CP-2	R90	2	14 AWG	120 VAC POWER
	F			TECK			R90	6	14 AWG	24 VDC STATUS
	G			TECK			BELDEN	2-PAIR	18 AWG	ANALOG STATUS
419	A	SMOKE DETECTOR	PUMP ROOM	TECK	SD 4614	CP-2	R90	2	14 AWG	24 VDC POWER
							R90	2	14 AWG	24 VDC STATUS
420	A	TEMPERATURE SWITCH HIGH	PUMP ROOM	TECK	TSH 4615	CP-2	R90	2	14 AWG	24 VDC STATUS
421	A	TEMPERATURE TRANSMITTER	PUMP ROOM	TECK	TT 4612	CP-2	BELDEN	1-PAIR	18 AWG	ANALOG STATUS
422	A	CONDUCTIVITY LEVEL SWITCH	PUMP ROOM	TECK	LS 4617 RELAY	CP-2	R90	2	14 AWG	120 VAC POWER
	B			TECK			R90	2	14 AWG	24 VDC STATUS
	C			N/A		LS 4617 PROBES	PRE-MANUFACTURED CABLES			PROBE WIRING
423	A	PNEUMATIC FLOW VALVE (FV)	PUMP ROOM	TECK	FV 4612-1	CP-11	R90	2	14 AWG	24 VDC CONTROL
424	A	PNEUMATIC FLOW VALVE (FV)	PUMP ROOM	TECK	FV 4612-2	CP-12	R90	2	14 AWG	24 VDC CONTROL
425	A	PNEUMATIC FLOW VALVE (FV)	PUMP ROOM	TECK	FV 4613-1	CP-11	R90	2	14 AWG	24 VDC CONTROL
426	A	PNEUMATIC FLOW VALVE (FV)	PUMP ROOM	TECK	FV 4613-2	CP-12	R90	2	14 AWG	24 VDC CONTROL
427	A	PNUEMATIC FLOW VALVE (FV)	PUMP ROOM	TECK	FV 4611-1	CP-11	R90	2	14 AWG	24 VDC CONTROL
	B			TECK	ZS 4611-1		R90	4	14 AWG	24 VDC STATUS
428	A	PNUEMATIC FLOW VALVE (FV)	PUMP ROOM	TECK	FV 4611-2	CP-12	R90	2	14 AWG	24 VDC CONTROL
	B			TECK	ZS 4611-2		R90	4	14 AWG	24 VDC STATUS
429	A	PRESSURE SWITCH HIGH (PSH)	PUMP ROOM	TECK	PSH 4631A-1	CP-11	R90	2	14 AWG	120 VAC STATUS
430	A	PRESSURE SWITCH HIGH (PSH)	PUMP ROOM	TECK	PSH 4631A-2	CP-12	R90	2	14 AWG	120 VAC STATUS
431	A	PRESSURE SWITCH HIGH (PSH)	PUMP ROOM	TECK	PSH 4631B-1	CP-11	R90	2	14 AWG	120 VAC STATUS
432	A	PRESSURE SWITCH HIGH (PSH)	PUMP ROOM	TECK	PSH 4631B-2	CP-12	R90	2	14 AWG	120 VAC STATUS
433	A	PNEUMATIC FLOW VALVE (FV)	PUMP ROOM	TECK	FV 4637-1	CP-11	R90	2	14 AWG	24 VDC CONTROL
434	A	PNEUMATIC FLOW VALVE (FV)	PUMP ROOM	TECK	FV 4637-2	CP-12	R90	2	14 AWG	24 VDC CONTROL
435	A	ANALYZER INDICATING TRANSMITTER - REMOTE DISPLAY	PUMP ROOM	TECK	AIT 4637-1	AE 4637-1	PRE-MANUFACTURED CABLE			ELEMENT CABLE - TURBIDITY
	B			TECK		CP-11	R90	2	14 AWG	120 VAC POWER
	C			TECK			BELDEN	1-PAIR	18 AWG	ANALOG STATUS
436	A	ANALYZER INDICATING TRANSMITTER - REMOTE DISPLAY	PUMP ROOM	TECK	AIT 4637-2	AE 4637-2	PRE-MANUFACTURED CABLE			ELEMENT CABLE - TURBIDITY
	B			TECK		CP-12	R90	2	14 AWG	120 VAC POWER
	C			TECK			BELDEN	1-PAIR	18 AWG	ANALOG STATUS
437	A	MAGNETIC FLOW METER - INTEGRAL DISPLAY	PUMP ROOM	TECK	FIT 4620-1	FE 4620-1	BELDEN	1-PAIR	18 AWG	HART STATUS - FLOW
	B			TECK		CP-11	R90	2	14 AWG	120 VAC POWER
438	A	MAGNETIC FLOW METER - INTEGRAL DISPLAY	PUMP ROOM	TECK	FIT 4620-2	FE 4620-2	BELDEN	1-PAIR	18 AWG	HART STATUS - FLOW
	B			TECK		CP-12	R90	2	14 AWG	120 VAC POWER
439	A	PNUEMATIC FLOW VALVE (FV)	PUMP ROOM	TECK	FV 4701-1	CP-11	R90	2	14 AWG	24 VDC CONTROL
	B			TECK	ZS 4701-1		R90	4	14 AWG	24 VDC STATUS
440	A	PNUEMATIC FLOW VALVE (FV)	PUMP ROOM	TECK	FV 4701-2	CP-12	R90	2	14 AWG	24 VDC CONTROL
	B			TECK	ZS 4701-2		R90	4	14 AWG	24 VDC STATUS
441	A	PNEUMATIC FLOW CONTROL VALVE WITH LIMIT SWITCHES	TREATMENT ROOM	TECK	FCV 4601-1	CP-11	BELDEN	1-PAIR	18 AWG	ANALOG CONTROL
	B			TECK			R90	3	14 AWG	24 VDC STATUS
442	A	PNEUMATIC FLOW CONTROL VALVE WITH LIMIT SWITCHES	TREATMENT ROOM	TECK	FCV 4601-2	CP-12	BELDEN	1-PAIR	18 AWG	ANALOG CONTROL
	C			TECK			R90	3	14 AWG	24 VDC STATUS
443	A	PNEUMATIC FLOW VALVE (FV)	TREATMENT ROOM	1-21? RPVC IN SLAB	FV 6101-1	CP-11	R90	2	14 AWG	24 VDC CONTROL
	B				ZS 6101-1		R90	4	14 AWG	24 VDC STATUS
444	A	PNEUMATIC FLOW VALVE (FV)	TREATMENT ROOM	1-21? RPVC IN SLAB	FV 6101-2	CP-12	R90	2	14 AWG	24 VDC CONTROL
	B				ZS 6101-2		R90	4	14 AWG	24 VDC STATUS
445	A	PNEUMATIC FLOW VALVE (FV)	PUMP ROOM	TECK	FV 6001-1	CP-11	R90	2	14 AWG	24 VDC CONTROL
446	A	PNEUMATIC FLOW VALVE (FV)	PUMP ROOM	TECK	FV 6001-2	CP-12	R90	2	14 AWG	24 VDC CONTROL

NOTES:

1. FOR INFORMATION REGARDING GENERAL NOTES, UTILITIES, ABBREVIATIONS AND SYMBOLS, REFER TO THE LEGEND DRAWINGS.
2. THE CONDUIT AND CABLE SCHEDULE IS INTENDED TO SHOW THE MAJORITY OF THE POWER AND INSTRUMENTATION CABLE RUNS. INSTALL AND CONNECT ALL CABLES AND CONDUIT TO PROVIDE A COMPLETE AND OPERATIONAL SYSTEM.
3. SEE ELECTRICAL PANEL AND MECHANICAL EQUIPMENT SCHEDULES FOR ADDITIONAL WIRING REQUIREMENTS.
4. LIKE VOLTAGE WIRING CAN BE COMBINED IN COMMON CONDUIT PROVIDING MINIMUM 25% SPARE IN ACCOUNTED FOR IN ADD IN TO CEC CONDUIT FILL REQUIREMENTS. SEPARATE CONDUITS ARE REQUIRED FOR 120VAC, 24VDC, ANALOG SIGNALS, COMMUNICATION.
5. ALL IN CONCRETE SLAB RIGID ALUMINUM (ALUM) CONDUIT TO HAVE OUTSIDE OF CONDUIT COVERED WITH CORROSION PROTECTIVE COATING BITUMASTIC, ASPHALT BASED PAINT OR PVC COATING.
6. IN CONCRETE SLAB CONDUITS TO BE RPVC OR RIGID ALUMINUM.
7. IN CEILING CONDUITS TO BE EMT.
8. SURFACE MOUNT CONDUITS TO BE RPVC AND ARE ONLY PERMITTED FOR VERTICAL RUNS INTO CEILING SPACE AND HORIZONTAL RUNS LESS THAN 600. INSTALL ALL CONDUITS IN WALLS, CEILINGS AND FLOORS UNLESS OTHERWISE INDICATED.
9. ALL CABLING SIZE BASED ON 75° TERMINATION TEMPERATURE.
10. PROVIDE AND INSTALL APPROPRIATELY SIZED GROUND CABLE FOR ALL CABLE RUNS.
11. ALL CABLES ARE TO BE COPPER UNLESS OTHERWISE NOTED.
12. CONTRACTOR TO LABEL ALL CONTROL AND INSTRUMENTATION WIRING AS PER DETAIL 3 ON E5.1.
13. CONTRACTOR TO LABEL ALL POWER CONDUIT AS PER DETAIL 4 ON E5.1.
14. WHERE CONDUIT AND CABLE IS MARKED FUTURE, CONTRACTOR IS TO INSTALL ONLY THE INDICATED CONDUIT BETWEEN THE FUTURE DEVICE AND THE CONDUIT SOURCE.

THIS DRAWING MAY HAVE BEEN MODIFIED FROM ITS ORIGINAL SIZE. ALL SCALE NOTATIONS INDICATED ARE BASED ON 11"x17" FORMAT DRAWINGS

ISSUE	YY-MM-DD	REVISION
2	21-01-15	FOR CONSTRUCTION
1	20-10-15	FOR TENDER

Association of Professional Engineers & Geoscientists of Saskatchewan
CERTIFICATE OF AUTHORIZATION
MPE Engineering Ltd.
Number C1334
Permission to Consult held by:
Discipline: ELECTRICAL
Sk. Reg. No.: 32675
Signature

PROFESSIONAL ENGINEER
R.G. DESTE
MEMBER 32675
2021-01-22
YR. MN. DAY
SASKATCHEWAN

MPE Engineering Ltd.

ENGLISH RIVER ENTERPRISES
PROPERTY MANAGEMENT LP

WASTEWATER TREATMENT PLANT
ELECTRICAL
CABLE AND CONDUIT SCHEDULE

DESIGNED	R.G.O	JOB	7603-002-00
DRAWN	T.S.	SCALE	N.T.S.
DATE	NOVEMBER 2020	DRAWING	E2.10

CONDUIT AND CABLE SCHEDULE

COND. No.	COND. TAG	DESCRIPTION	LOCATION	CONDUIT SIZE AND TYPE	TAG / FROM	TO	WIRE TYPE	No. OF WIRES	WIRE SIZE	REMARKS
447	A	PNEUMATIC FLOW VALVE (FV)	PUMP ROOM	TECK	FV 1100	CP-12	R90	2	14 AWG	24 VDC CONTROL
448	A	PRESSURE INDICATING TRANSMITTER (PIT)	TREATMENT ROOM	1-21? RPVC IN SLAB - TRANSITION TO TECK IN PUMP ROOM	PIT 4632-1	CP-11	R90	2	14 AWG	ANALOG STATUS
449	A	PRESSURE INDICATING TRANSMITTER (PIT)	TREATMENT ROOM	1-21? RPVC IN SLAB - TRANSITION TO TECK IN PUMP ROOM	PIT 4632-2	CP-12	R90	2	14 AWG	ANALOG STATUS
450	A	LEVEL SWITCH(S)	TREATMENT ROOM	1-21? RPVC IN SLAB - TRANSITION TO TECK AT PUMP ROOM	LSH 4626-1 / LSHH 4626-1	CP-11	R90	4	14 AWG	24 VDC STATUS
451	A	LEVEL SWITCH(S)	TREATMENT ROOM	1-21? RPVC IN SLAB - TRANSITION TO TECK AT PUMP ROOM	LSH 4626-2 / LSHH 4626-2	CP-12	R90	4	14 AWG	24 VDC STATUS
461	A	LEVEL INDICATING TRANSMITTER - INTEGRAL DISPLAY	TREATMENT ROOM	1-21? RPVC IN SLAB - TRANSITION TO TECK AT PUMP ROOM	LIT 4626-1	CP-11	BELDEN	1-PAIR	18 AWG	ANALOG STATUS - LEVEL
462	A	LEVEL INDICATING TRANSMITTER - INTEGRAL DISPLAY	TREATMENT ROOM	1-21? RPVC IN SLAB - TRANSITION TO TECK AT PUMP ROOM	LIT 4626-2	CP-12	BELDEN	1-PAIR	18 AWG	ANALOG STATUS - LEVEL
463	A	PNEUMATIC FLOW VALVE (FV)	PUMP ROOM	TECK	FV 4901-1	CP-11	R90	2	14 AWG	24 VDC CONTROL
	B				ZS 4901-1		R90	4	14 AWG	24 VDC STATUS
464	A	PNEUMATIC FLOW VALVE (FV)	PUMP ROOM	TECK	FV 4901-2	CP-12	R90	2	14 AWG	24 VDC CONTROL
	B				ZS 4901-2		R90	4	14 AWG	24 VDC STATUS
465	A	MAGNETIC FLOW METER - REMOTE DISPLAY	PUMP ROOM	TECK	FIT 4901-1	FE 4901-1	PRE-MANUFACTURED CABLE			ANALOG STATUS
	B			TECK		CP-11	BELDEN	1-PAIR	18 AWG	HART STATUS - FLOW
	C			TECK			R90	2	14 AWG	120 VAC POWER
466	A	MAGNETIC FLOW METER - REMOTE DISPLAY	PUMP ROOM	TECK	FIT 4901-2	FE 4901-2	PRE-MANUFACTURED CABLE			ANALOG STATUS
	B			TECK		CP-12	BELDEN	1-PAIR	18 AWG	HART STATUS - FLOW
	C			TECK			R90	2	14 AWG	120 VAC POWER
467	A	PNEUMATIC FLOW VALVE WITH LIMIT SWITCHES	PUMP ROOM	TECK	FCV 4912	CP-1	R90	2	14 AWG	24 VDC CONTROL
	B			TECK			R90	4	14 AWG	24 VDC STATUS
468	A	PRESSURE LEVEL TRANSMITTER	BIOREACTOR 1	TECK	LT 3026-1	CP-1	BELDEN	1-PAIR	18 AWG	ANALOG STATUS - LEVEL
469	A	PRESSURE LEVEL TRANSMITTER	BIOREACTOR 2	TECK	LT 3026-2	CP-1	BELDEN	1-PAIR	18 AWG	ANALOG STATUS - LEVEL
470	A	ANALYZER INDICATING TRANSMITTER - REMOTE DISPLAY	BIOREACTOR 1	TECK	AIT 3041-1	AE 3041-1	PRE-MANUFACTURED CABLE			ELEMENT CABLE - DISSOLVED OXYGEN
	C			TECK		CP-1	R90	2	14 AWG	120 VAC POWER
	D			TECK			BELDEN	1-PAIR	18 AWG	ANALOG STATUS
471	A	ANALYZER INDICATING TRANSMITTER - REMOTE DISPLAY	BIOREACTOR 2	N/A	AIT 3041-2	AE 3041-2	PRE-MANUFACTURED CABLE			ELEMENT CABLE - DISSOLVED OXYGEN
	C			TECK		CP-1	R90	2	14 AWG	120 VAC POWER
	D			TECK			BELDEN	1-PAIR	18 AWG	ANALOG STATUS
472	A	LEVEL SWITCH(S)	BIOREACTOR 1	TECK	LSHH 3026-1	CP-1	R90	2	14 AWG	24 VDC STATUS
473	A	LEVEL SWITCH(S)	BIOREACTOR 2	TECK	LSHH 3026-2	CP-1	R90	2	14 AWG	24 VDC STATUS
474	A	PRESSURE SWITCH LOW (PSL)	PUMP ROOM	TECK	PSL 6031	CP-1	R90	2	14 AWG	24 VDC STATUS
475	A	PRESSURE SWITCH LOW LOW (PSLL)	PUMP ROOM	TECK	PSLL 6031	CP-1	R90	2	14 AWG	24 VDC STATUS
476	A	ANALYZER INDICATING TRANSMITTER - REMOTE DISPLAY	BIOREACTOR 1	1-21? RPVC	AIT 3042-1	AE 3042-1	PRE-MANUFACTURED CABLE			ELEMENT CABLE - pH & TEMPERATURE
	C			TECK		CP-1	R90	2	14 AWG	120 VAC POWER
	D			TECK			BELDEN	2-PAIR	18 AWG	ANALOG STATUS
478	A	ANALYZER INDICATING TRANSMITTER - REMOTE DISPLAY	BIOREACTOR 2	1-21? RPVC	AIT 3042-2	AE 3042-2	PRE-MANUFACTURED CABLE			ELEMENT CABLE - pH & TEMPERATURE
	C			TECK		CP-1	R90	2	14 AWG	120 VAC POWER
	D			TECK			BELDEN	2-PAIR	18 AWG	ANALOG STATUS

NOTES:

1. FOR INFORMATION REGARDING GENERAL NOTES, UTILITIES, ABBREVIATIONS AND SYMBOLS, REFER TO THE LEGEND DRAWINGS.
2. THE CONDUIT AND CABLE SCHEDULE IS INTENDED TO SHOW THE MAJORITY OF THE POWER AND INSTRUMENTATION CABLE RUNS. INSTALL AND CONNECT ALL CABLES AND CONDUIT TO PROVIDE A COMPLETE AND OPERATIONAL SYSTEM.
3. SEE ELECTRICAL PANEL AND MECHANICAL EQUIPMENT SCHEDULES FOR ADDITIONAL WIRING REQUIREMENTS.
4. LIKE VOLTAGE WIRING CAN BE COMBINED IN COMMON CONDUIT PROVIDING MINIMUM 25% SPARE IN ACCOUNTED FOR IN ADD IN TO CEC CONDUIT FILL REQUIREMENTS. SEPARATE CONDUITS ARE REQUIRED FOR 120VAC, 24VDC, ANALOG SIGNALS, COMMUNICATION.
5. ALL IN CONCRETE SLAB RIGID ALUMINUM (ALUM) CONDUIT TO HAVE OUTSIDE OF CONDUIT COVERED WITH CORROSION PROTECTIVE COATING BITUMASTIC, ASPHALT BASED PAINT OR PVC COATING.
6. IN CONCRETE SLAB CONDUITS TO BE RPVC OR RIGID ALUMINUM.
7. IN CEILING CONDUITS TO BE EMT.
8. SURFACE MOUNT CONDUITS TO BE RPVC AND ARE ONLY PERMITTED FOR VERTICAL RUNS INTO CEILING SPACE AND HORIZONTAL RUNS LESS THAN 600. INSTALL ALL CONDUITS IN WALLS, CEILINGS AND FLOORS UNLESS OTHERWISE INDICATED.
9. ALL CABLING SIZE BASED ON 75° TERMINATION TEMPERATURE.
10. PROVIDE AND INSTALL APPROPRIATELY SIZED GROUND CABLE FOR ALL CABLE RUNS.
11. ALL CABLES ARE TO BE COPPER UNLESS OTHERWISE NOTED.
12. CONTRACTOR TO LABEL ALL CONTROL AND INSTRUMENTATION WIRING AS PER DETAIL 3 ON E5.1.
13. CONTRACTOR TO LABEL ALL POWER CONDUIT AS PER DETAIL 4 ON E5.1.
14. WHERE CONDUIT AND CABLE IS MARKED FUTURE, CONTRACTOR IS TO INSTALL ONLY THE INDICATED CONDUIT BETWEEN THE FUTURE DEVICE AND THE CONDUIT SOURCE.

THIS DRAWING MAY HAVE BEEN MODIFIED FROM ITS ORIGINAL SIZE. ALL SCALE NOTATIONS INDICATED ARE BASED ON 11"x17" FORMAT DRAWINGS

ISSUE	YY-MM-DD	REVISION
2	21-01-15	FOR CONSTRUCTION
1	20-10-15	FOR TENDER

Association of Professional Engineers & Geoscientists of Saskatchewan
CERTIFICATE OF AUTHORIZATION
MPE Engineering Ltd.
Number C1334
Permission to Consult held by:

Discipline	Sk. Reg. No.	Signature
ELECTRICAL	32675	

PROFESSIONAL ENGINEER
R.G. OESTIE
MEMBER 32675
2021-01-22
YR. MN. DAY.
SASKATCHEWAN

MPE Engineering Ltd.

ENGLISH RIVER ENTERPRISES PROPERTY MANAGEMENT LP

WASTEWATER TREATMENT PLANT
ELECTRICAL
CABLE AND CONDUIT SCHEDULE

DESIGNED	R.G.O	JOB	7603-002-00
DRAWN	T.S.	SCALE	N.T.S.
DATE	NOVEMBER 2020	DRAWING	E2.11

CONDUIT AND CABLE SCHEDULE

COND. No.	COND. TAG	DESCRIPTION	LOCATION	CONDUIT SIZE AND TYPE	TAG / FROM	TO	WIRE TYPE	No. OF WIRES	WIRE SIZE	REMARKS
501	B	FULL VOLTAGE NON REVERSING STARTER (FVNR)	HEADWORKS	1-21? RIGID ALUMINUM IN SLAB	FVNR 2501A	DS 2501A	R90	3	12 AWG	600 VAC POWER
	D			1-21? RIGID ALUMINUM IN SLAB		ES 2501A	R90	4	14 AWG	120 VAC EMERGENCY STOP STATUS
	E			TECK		CP-1	R90	4	14 AWG	120 VAC STATUS AND CONTROL
	F			TECK			R90	4	14 AWG	24 VDC STATUS
502	B	FULL VOLTAGE NON REVERSING STARTER (FVNR)	HEADWORKS	1-21? RIGID ALUMINUM IN SLAB	FVNR 2501B	DS 2501B	R90	3	12 AWG	600 VAC POWER
	D			1-21? RIGID ALUMINUM IN SLAB		ES 2501B	R90	4	14 AWG	120 VAC EMERGENCY STOP STATUS
	E			TECK		CP-1	R90	4	14 AWG	120 VAC STATUS AND CONTROL
	F			TECK			R90	4	14 AWG	24 VDC STATUS
503	B	FULL VOLTAGE NON REVERSING STARTER (FVNR)	HEADWORKS	1-21? RIGID ALUMINUM IN SLAB	FVNR 2202A	SC 2202A	R90	3	12 AWG	600 VAC POWER
	D			1-21? RIGID ALUMINUM IN SLAB		ES 2202A	R90	4	14 AWG	120 VAC EMERGENCY STOP STATUS
	E			TECK		CP-1	R90	4	14 AWG	120 VAC STATUS AND CONTROL
	F			TECK			R90	4	14 AWG	24 VDC STATUS
504	B	FULL VOLTAGE NON REVERSING STARTER (FVNR)	HEADWORKS	1-21? RIGID ALUMINUM IN SLAB	FVNR 2202B	SC 2202B	R90	3	12 AWG	600 VAC POWER
	D			1-21? RIGID ALUMINUM IN SLAB		ES 2202B	R90	4	14 AWG	120 VAC EMERGENCY STOP STATUS
	E			TECK		CP-1	R90	4	14 AWG	120 VAC STATUS AND CONTROL
	F			TECK			R90	4	14 AWG	24 VDC STATUS
505	A	ANALYZER INDICATING TRANSMITTER - REMOTE DISPLAY	HEADWORKS	TECK	AIT 2224 / AIT 2225	AE 2225	BELDEN	1-PAIR	18 AWG	ELEMENT CABLE - H2S
	B			TECK		AE 2224	BELDEN	1-PAIR	18 AWG	ELEMENT CABLE - METHANE
	C			TECK		BCN 2225	R90	2	14 AWG	12 VDC POWER
	D			TECK		HN 2225	R90	2	14 AWG	12 VDC POWER
	E			TECK		CP-2	R90	2	14 AWG	120 VAC POWER
	F			TECK			R90	6	14 AWG	24 VDC STATUS
	G			TECK			BELDEN	2-PAIR	18 AWG	ANALOG STATUS
507	A	TEMPERATURE SWITCH HIGH	HEADWORKS	TECK	TSH 2215	CP-2	R90	2	14 AWG	24 VDC STATUS
508	A	TEMPERATURE TRANSMITTER	HEADWORKS	TECK	TT 2212	CP-2	BELDEN	1-PAIR	18 AWG	ANALOG STATUS
509	A	CONDUCTIVITY LEVEL SWITCH	HEADWORKS	TECK	LS 2217 RELAY	CP-2	R90	2	14 AWG	120 VAC POWER
	B			TECK			R90	2	14 AWG	24 VDC STATUS
	C			N/A		LS 2217 PROBES	PRE-MANUFACTURED CABLES			PROBE WIRING
510	A	ALARM BEACON	HEADWORKS	TECK	BCN 2225-1	CP-2	R90	2	14 AWG	120 VAC CONTROL
512	A	MAGNETIC FLOW METER - REMOTE DISPLAY	HEADWORKS	TECK	FIT 2101	FE 2101	PRE-MANUFACTURED CABLE			ANALOG STATUS
	B			TECK		CP-2	BELDEN	1-PAIR	18 AWG	HART STATUS - FLOW
	C			TECK			R90	2	14 AWG	120 VAC POWER
513	A	PNEUMATIC FLOW VALVE (FV)	HEADWORKS	TECK	FV 2268A	CP-1	R90	2	14 AWG	24 VDC CONTROL
514	A	PNEUMATIC FLOW VALVE (FV)	HEADWORKS	TECK	FV 2268B	CP-1	R90	2	14 AWG	24 VDC CONTROL
515	A	LEVEL SWITCH(S)	HEADWORKS	TECK	LSHH 2201A	CP-1	R90	2	14 AWG	24 VDC STATUS
516	A	LEVEL SWITCH(S)	HEADWORKS	TECK	LSHH 2201B	CP-1	R90	2	14 AWG	24 VDC STATUS
517	A	PNEUMATIC FLOW VALVE (FV)	HEADWORKS	TECK	FV 2269A	CP-1	R90	2	14 AWG	24 VDC CONTROL
518	A	PNEUMATIC FLOW VALVE (FV)	HEADWORKS	TECK	FV 2269B	CP-1	R90	2	14 AWG	24 VDC CONTROL
519	A	LEVEL SWITCH(S)	EQUALIZATION CHAMBER	TECK	LSHH 1126 / LSLL 1126	CP-2	R90	4	14 AWG	24 VDC STATUS
520	A	LEVEL INDICATING TRANSMITTER - REMOTE DISPLAY	EQUALIZATION CHAMBER	1-21? RIGID ALUMINUM	LIT 1126	LIT 1126	PRE-MANUFACTURED CABLE			ELEMENT CABLE - LEVEL
	B			TECK		CP-2	R90	2	14 AWG	24 VDC POWER
	C			TECK			BELDEN	1-PAIR	18 AWG	ANALOG STATUS - LEVEL
521	A	LEVEL SWITCH(S)	EQUALIZATION CHAMBER	TECK	LT 1126B	CP-2	BELDEN	1-PAIR	18 AWG	ANALOG STATUS - LEVEL

NOTES:

1. FOR INFORMATION REGARDING GENERAL NOTES, UTILITIES, ABBREVIATIONS AND SYMBOLS, REFER TO THE LEGEND DRAWINGS.
2. THE CONDUIT AND CABLE SCHEDULE IS INTENDED TO SHOW THE MAJORITY OF THE POWER AND INSTRUMENTATION CABLE RUNS. INSTALL AND CONNECT ALL CABLES AND CONDUIT TO PROVIDE A COMPLETE AND OPERATIONAL SYSTEM.
3. SEE ELECTRICAL PANEL AND MECHANICAL EQUIPMENT SCHEDULES FOR ADDITIONAL WIRING REQUIREMENTS.
4. LIKE VOLTAGE WIRING CAN BE COMBINED IN COMMON CONDUIT PROVIDING MINIMUM 25% SPARE IN ACCOUNTED FOR IN ADD IN TO CEC CONDUIT FILL REQUIREMENTS. SEPARATE CONDUITS ARE REQUIRED FOR 120VAC, 24VDC, ANALOG SIGNALS, COMMUNICATION.
5. ALL IN CONCRETE SLAB RIGID ALUMINUM (ALUM) CONDUIT TO HAVE OUTSIDE OF CONDUIT COVERED WITH CORROSION PROTECTIVE COATING BITUMASTIC, ASPHALT BASED PAINT OR PVC COATING.
6. IN CONCRETE SLAB CONDUITS TO BE RPVC OR RIGID ALUMINUM.
7. IN CEILING CONDUITS TO BE EMT.
8. SURFACE MOUNT CONDUITS TO BE RPVC AND ARE ONLY PERMITTED FOR VERTICAL RUNS INTO CEILING SPACE AND HORIZONTAL RUNS LESS THAN 600. INSTALL ALL CONDUITS IN WALLS, CEILINGS AND FLOORS UNLESS OTHERWISE INDICATED.
9. ALL CABLING SIZE BASED ON 75° TERMINATION TEMPERATURE.
10. PROVIDE AND INSTALL APPROPRIATELY SIZED GROUND CABLE FOR ALL CABLE RUNS.
11. ALL CABLES ARE TO BE COPPER UNLESS OTHERWISE NOTED.
12. CONTRACTOR TO LABEL ALL CONTROL AND INSTRUMENTATION WIRING AS PER DETAIL 3 ON E5.1.
13. CONTRACTOR TO LABEL ALL POWER CONDUIT AS PER DETAIL 4 ON E5.1.
14. WHERE CONDUIT AND CABLE IS MARKED FUTURE, CONTRACTOR IS TO INSTALL ONLY THE INDICATED CONDUIT BETWEEN THE FUTURE DEVICE AND THE CONDUIT SOURCE.

THIS DRAWING MAY HAVE BEEN MODIFIED FROM ITS ORIGINAL SIZE. ALL SCALE NOTATIONS INDICATED ARE BASED ON 11"x17" FORMAT DRAWINGS

ISSUE	YY-MM-DD	REVISION
2	21-01-15	FOR CONSTRUCTION
1	20-10-15	FOR TENDER

Association of Professional Engineers & Geoscientists of Saskatchewan
CERTIFICATE OF AUTHORIZATION
MPE Engineering Ltd.
Number C1334
Permission to Consult held by:

Discipline	Sk. Reg. No.	Signature
ELECTRICAL	32675	

PROFESSIONAL ENGINEER
R.G. DESTE
MEMBER 32675
2021-01-22
YR. MN. DAY.
SASKATCHEWAN

MPE Engineering Ltd.

ENGLISH RIVER ENTERPRISES
PROPERTY MANAGEMENT LP

WASTEWATER TREATMENT PLANT
ELECTRICAL
CABLE AND CONDUIT SCHEDULE

DESIGNED	R.G.O	JOB	7603-002-00
DRAWN	T.S.	SCALE	N.T.S.
DATE	NOVEMBER 2020	DRAWING	E2.12

CONDUIT AND CABLE SCHEDULE

COND. No.	COND. TAG	DESCRIPTION	LOCATION	CONDUIT SIZE AND TYPE	TAG / FROM	TO	WIRE TYPE	No. OF WIRES	WIRE SIZE	REMARKS
900	A	TELEPHONE AND INTERNET SERVICE	ELECTRICAL ROOM	1-53? RPVC	SASKTEL PEDESTAL	TELEPHONE DEMARCATION	PULL STRING			PULL STRING
	B			TECK	TELEPHONE DEMARCATION	NETWORK RACK DATA PATCH PANEL	2-CAT 6 ETHERNET			SEE E0.3 FOR DEVICE AND PORT DETAILS
901	A	CONTROL PANEL 1 NETWORK HEAD	ELECTRICAL ROOM	TECK	CP-1	NETWORK RACK DATA PATCH PANEL	1-SHIELDED CAT 6 ETHERNET			SEE E0.3 FOR DEVICE AND PORT DETAILS
902	A	CONTROL PANEL 1 NETWORK TAIL	ELECTRICAL ROOM	TECK	CP-1	NETWORK RACK DATA PATCH PANEL	1-SHIELDED CAT 6 ETHERNET			SEE E0.3 FOR DEVICE AND PORT DETAILS
903	A	CONTROL PANEL 2 NETWORK HEAD	ELECTRICAL ROOM	TECK	CP-2	NETWORK RACK DATA PATCH PANEL	2-SHIELDED CAT 6 ETHERNET			SEE E0.3 FOR DEVICE AND PORT DETAILS
904	A	CONTROL PANEL 11 NETWORK	PUMP ROOM	TECK	CP-11	CP-1	1-SHIELDED CAT 6 ETHERNET			SEE E0.3 FOR DEVICE AND PORT DETAILS
905	A	CONTROL PANEL 12 NETWORK	PUMP ROOM	TECK	CP-12	CP-1	1-SHIELDED CAT 6 ETHERNET			SEE E0.3 FOR DEVICE AND PORT DETAILS
906	A	CONTROL PANEL 11 TO 12 NETWORK	PUMP ROOM	TECK	CP-11	CP-12	1-SHIELDED CAT 6 ETHERNET			SEE E0.3 FOR DEVICE AND PORT DETAILS
907	A	WIRELESS ACCESS POINT	OFFICE	1-21? EMT	WAP-1	NETWORK RACK DATA PATCH PANEL	1-SHIELDED CAT 6 ETHERNET			SEE E0.3 FOR DEVICE AND PORT DETAILS
908	A	WIRELESS ACCESS POINT	TREATMENT ROOM	TECK	WAP-2	NETWORK RACK DATA PATCH PANEL	1-SHIELDED CAT 6 ETHERNET			SEE E0.3 FOR DEVICE AND PORT DETAILS
909	A	WIRELESS ACCESS POINT	PUMP ROOM	TECK	WAP-3	NETWORK RACK DATA PATCH PANEL	1-SHIELDED CAT 6 ETHERNET			SEE E0.3 FOR DEVICE AND PORT DETAILS
910	A	DEVICE BOX 1 - SCADA PC	OFFICE	1-27? EMT	DB-1	NETWORK RACK DATA PATCH PANEL	3-CAT 6 ETHERNET			SEE E0.3 FOR DEVICE AND PORT DETAILS
	B					TELEPHONE BIX	1-CAT 6 ETHERNET			SEE E0.3 FOR DEVICE AND PORT DETAILS
911	A	DEVICE BOX 2 - INTERNET PC	OFFICE	1-27? EMT	DB-2	NETWORK RACK DATA PATCH PANEL	3-CAT 6 ETHERNET			SEE E0.3 FOR DEVICE AND PORT DETAILS
	B					TELEPHONE BIX	1-CAT 6 ETHERNET			SEE E0.3 FOR DEVICE AND PORT DETAILS
912	A	DEVICE BOX 3 - PRINTER/FAX	OFFICE	1-21? EMT	DB-3	NETWORK RACK DATA PATCH PANEL	1-CAT 6 ETHERNET			SEE E0.3 FOR DEVICE AND PORT DETAILS
	B					TELEPHONE BIX	1-CAT 6 ETHERNET			SEE E0.3 FOR DEVICE AND PORT DETAILS
913	A	DEVICE BOX 4 - LABORATORY 1	LABORATORY	1-21? EMT	DB-4	TELEPHONE BIX	1-CAT 6 ETHERNET			SEE E0.3 FOR DEVICE AND PORT DETAILS
				1-21? EMT		NETWORK DATA RACK	2-CAT 6 ETHERNET			SEE E0.3 FOR DEVICE AND PORT DETAILS
914	A	DEVICE BOX 5 - LABORATORY 2	LABORATORY	1-21? EMT	DB-5	TELEPHONE BIX	1-CAT 6 ETHERNET			SEE E0.3 FOR DEVICE AND PORT DETAILS
				1-21? EMT		NETWORK DATA RACK	2-CAT 6 ETHERNET			SEE E0.3 FOR DEVICE AND PORT DETAILS
915	A	SEPTAGE RECEIVING STATION	EXTERIOR	TECK	SEPTAGE RECEIVING STATION CONTROL PANEL	NETWORK RACK DATA PATCH PANEL	2-CAT 6 ETHERNET			SEE E0.3 FOR DEVICE AND PORT DETAILS

NOTES:

1. FOR INFORMATION REGARDING GENERAL NOTES, UTILITIES, ABBREVIATIONS AND SYMBOLS, REFER TO THE LEGEND DRAWINGS.
2. THE CONDUIT AND CABLE SCHEDULE IS INTENDED TO SHOW THE MAJORITY OF THE POWER AND INSTRUMENTATION CABLE RUNS. INSTALL AND CONNECT ALL CABLES AND CONDUIT TO PROVIDE A COMPLETE AND OPERATIONAL SYSTEM.
3. SEE ELECTRICAL PANEL AND MECHANICAL EQUIPMENT SCHEDULES FOR ADDITIONAL WIRING REQUIREMENTS.
4. LIKE VOLTAGE WIRING CAN BE COMBINED IN COMMON CONDUIT PROVIDING MINIMUM 25% SPARE IN ACCOUNTED FOR IN ADD IN TO CEC CONDUIT FILL REQUIREMENTS. SEPARATE CONDUITS ARE REQUIRED FOR 120VAC, 24VDC, ANALOG SIGNALS, COMMUNICATION.
5. ALL IN CONCRETE SLAB RIGID ALUMINUM (ALUM) CONDUIT TO HAVE OUTSIDE OF CONDUIT COVERED WITH CORROSION PROTECTIVE COATING BITUMASTIC, ASPHALT BASED PAINT OR PVC COATING.
6. IN CONCRETE SLAB CONDUITS TO BE RPVC OR RIGID ALUMINUM.
7. IN CEILING CONDUITS TO BE EMT.
8. SURFACE MOUNT CONDUITS TO BE RPVC AND ARE ONLY PERMITTED FOR VERTICAL RUNS INTO CEILING SPACE AND HORIZONTAL RUNS LESS THAN 600. INSTALL ALL CONDUITS IN WALLS, CEILINGS AND FLOORS UNLESS OTHERWISE INDICATED.
9. ALL CABLING SIZE BASED ON 75° TERMINATION TEMPERATURE.
10. PROVIDE AND INSTALL APPROPRIATELY SIZED GROUND CABLE FOR ALL CABLE RUNS.
11. ALL CABLES ARE TO BE COPPER UNLESS OTHERWISE NOTED.
12. CONTRACTOR TO LABEL ALL CONTROL AND INSTRUMENTATION WIRING AS PER DETAIL 3 ON E5.1.
13. CONTRACTOR TO LABEL ALL POWER CONDUIT AS PER DETAIL 4 ON E5.1.
14. WHERE CONDUIT AND CABLE IS MARKED FUTURE, CONTRACTOR IS TO INSTALL ONLY THE INDICATED CONDUIT BETWEEN THE FUTURE DEVICE AND THE CONDUIT SOURCE.

THIS DRAWING MAY HAVE BEEN MODIFIED FROM ITS ORIGINAL SIZE. ALL SCALE NOTATIONS INDICATED ARE BASED ON 11"x17" FORMAT DRAWINGS

ISSUE	YY-MM-DD	REVISION
2	21-01-15	FOR CONSTRUCTION
1	20-10-15	FOR TENDER

Association of Professional Engineers & Geoscientists of Saskatchewan
CERTIFICATE OF AUTHORIZATION
MPE Engineering Ltd.
Number C1334
Permission to Consult held by:

Discipline	Sk. Reg. No.	Signature
ELECTRICAL	32675	

PROFESSIONAL ENGINEER
R.G. DESTIE
MEMBER 32675
2021-01-22
YR. MN. DAY.
SASKATCHEWAN

MPE Engineering Ltd.

ENGLISH RIVER ENTERPRISES PROPERTY MANAGEMENT LP

WASTEWATER TREATMENT PLANT
ELECTRICAL
CABLE AND CONDUIT SCHEDULE

DESIGNED	R.G.O	JOB	7603-002-00
DRAWN	T.S.	SCALE	N.T.S.
DATE	NOVEMBER 2020	DRAWING	E2.13

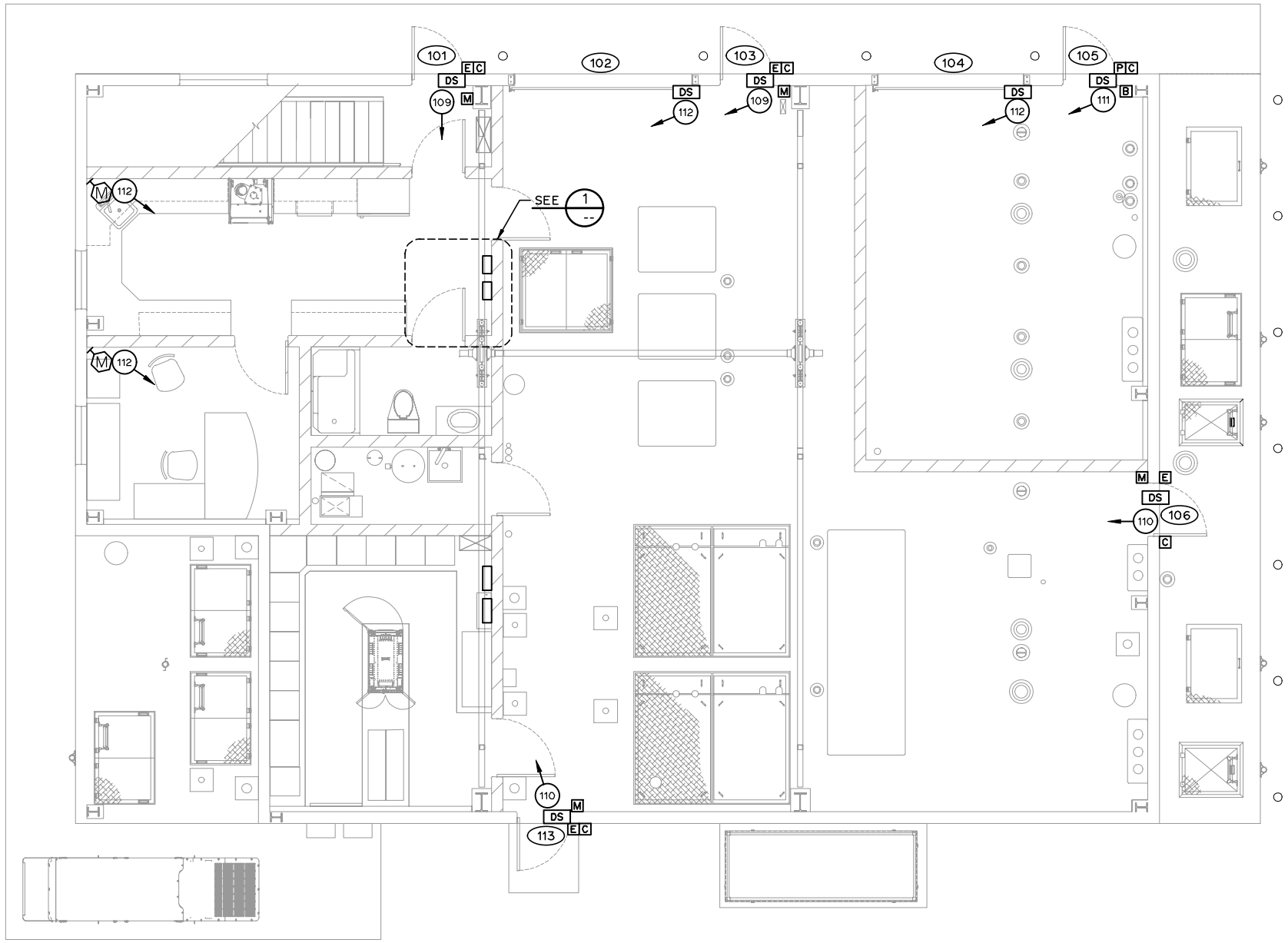

ACCESS CONTROL LAYOUT PLAN

SEE -- E3.2

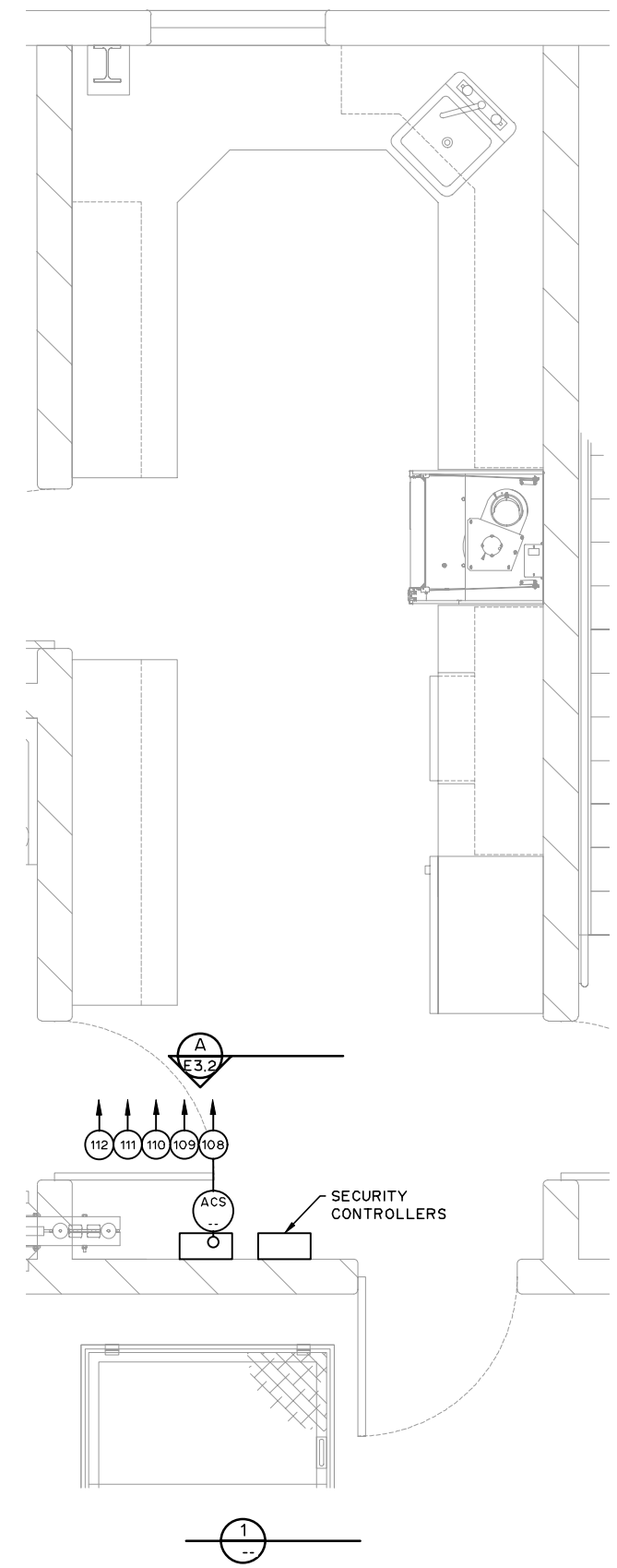

NOTES:

1. FOR INFORMATION REGARDING GENERAL NOTES, UTILITIES, ABBREVIATIONS AND SYMBOLS, REFER TO THE LEGEND DRAWINGS.
2. SBM = SIZED BY MANUFACTURER. SIZE OVER CURRENT DEVICE AND CABLING AS PER MANUFACTURERS RECOMMENDATIONS.
3. (--) SEE CONDUIT AND CABLE SCHEDULES ON E-DRAWINGS SERIES.
3. (XXX) DOOR TAG. REFER TO ARCHITECTURAL DRAWINGS
4. HEIGHT TO BE CONFIRMED ON SITE.

LEGEND:

C	WALL MOUNTED CARD READER
M	WALL MOUNTED MOTION SENSOR
DS	DOOR POSITION SWITCH (DOOR CONTACT)
E	ELECTRIC STRIKE
P	PNEUMATIC STRIKE
M	MOTION RTE
B	ZONE 2 RATED PUSH BUTTON RTE

THIS DRAWING MAY HAVE BEEN MODIFIED FROM ITS ORIGINAL SIZE. ALL SCALE NOTATIONS INDICATED ARE BASED ON 11"x17" FORMAT DRAWINGS

ISSUE	YY-MM-DD	REVISION
2	21-01-15	FOR CONSTRUCTION
1	20-10-15	FOR TENDER

Association of Professional Engineers & Geoscientists of Saskatchewan
CERTIFICATE OF AUTHORIZATION
MPE Engineering Ltd.
Number C1334
Permission to Consult held by:

Discipline	Sk. Reg. No.	Signature
ELECTRICAL	32675	

PROFESSIONAL ENGINEER
R.G. DESTIE
MEMBER 32675
2021-01-22
YR. MN. DAY
SASKATCHEWAN

MPE Engineering Ltd.

ENGLISH RIVER ENTERPRISES
PROPERTY MANAGEMENT LP

WASTEWATER TREATMENT PLANT
ELECTRICAL
ACCESS CONTROL LAYOUT

DESIGNED	R.G.O	JOB	7603-002-00
DRAWN	T.S.	SCALE	N.T.S.
DATE	NOVEMBER 2020	DRAWING	E3.1

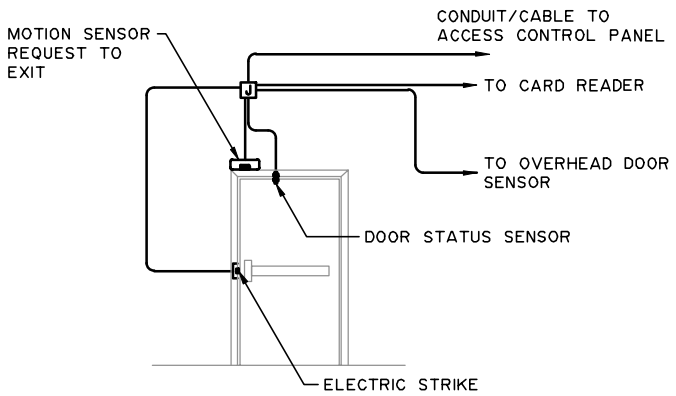

TYPICAL SINGLE DOOR SECURE SIDE

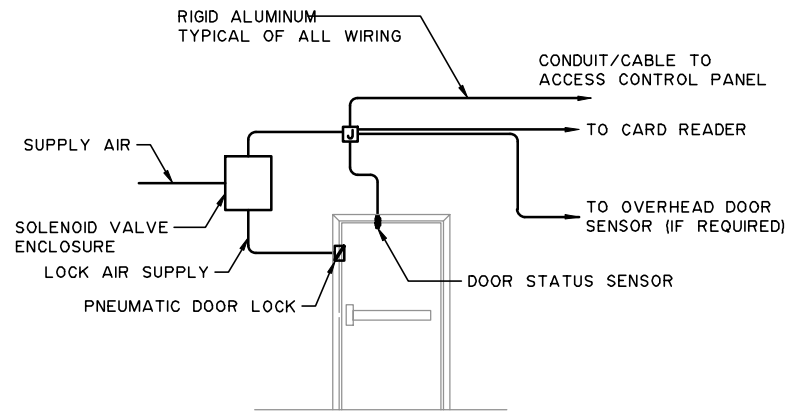

HEADWORKS SINGLE DOOR SECURE SIDE

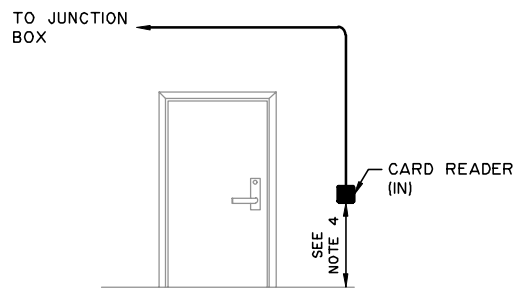

TYPICAL SINGLE DOOR PUBLIC SIDE

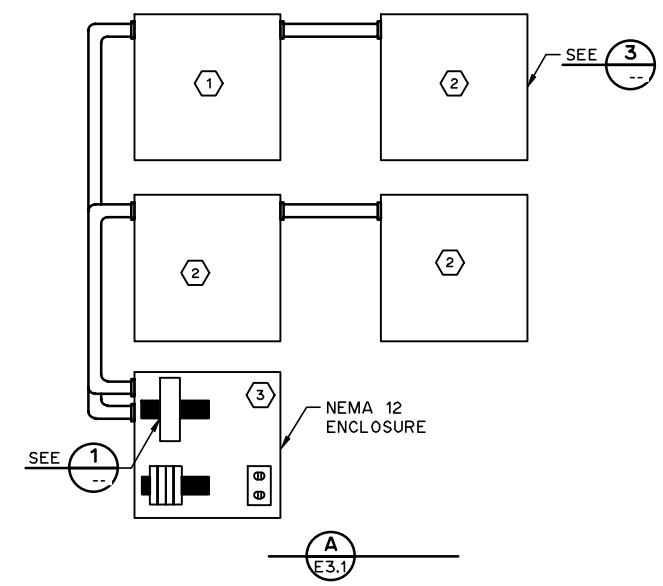

TYPICAL DOOR ACCESS CONTROL DETAIL

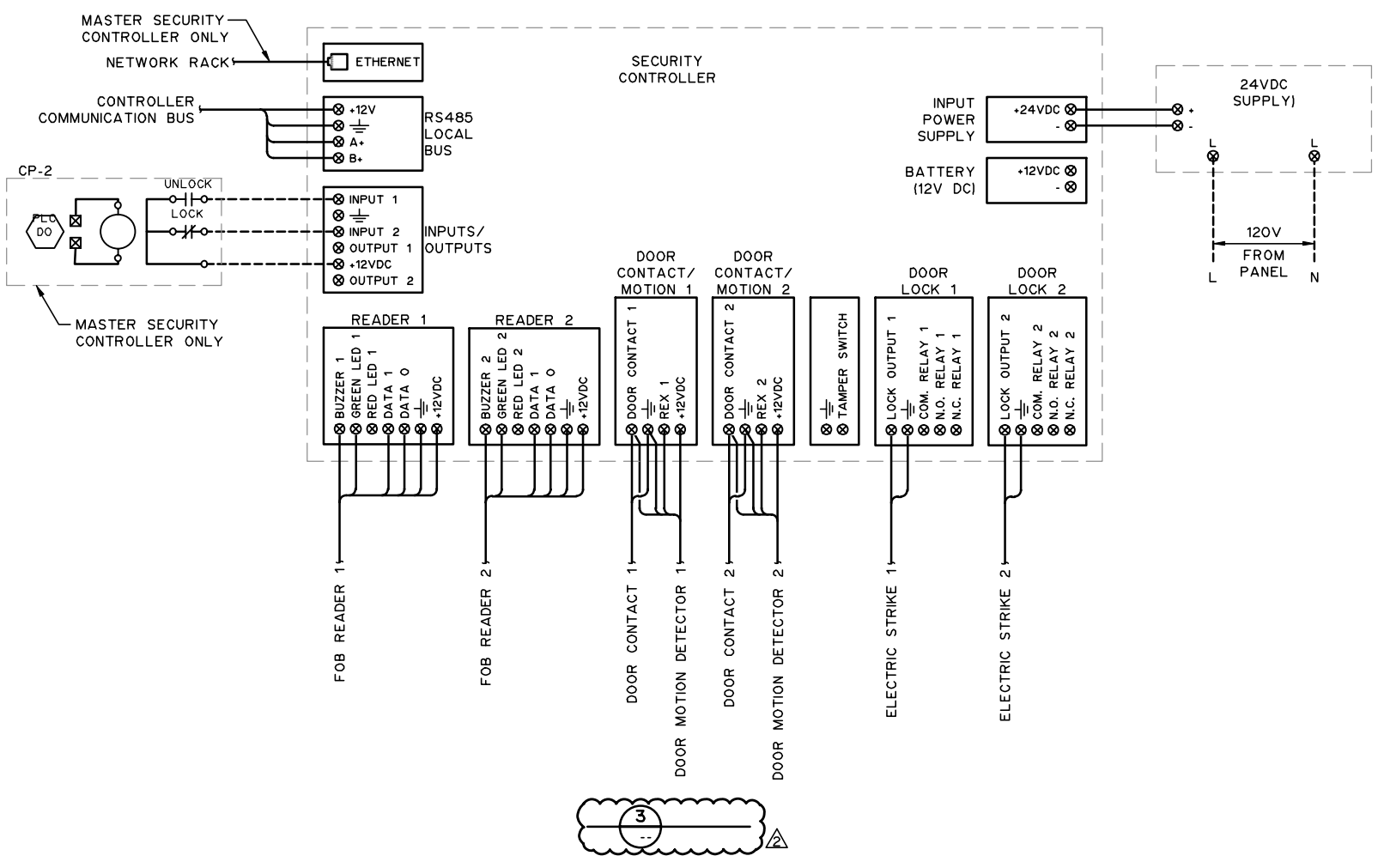

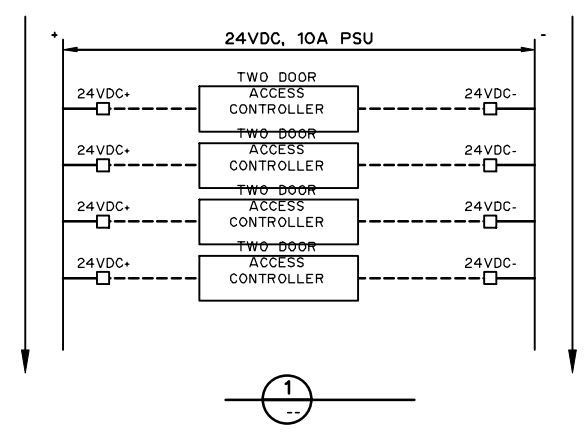

NOTES:

1. FOR INFORMATION REGARDING GENERAL NOTES, UTILITIES, ABBREVIATIONS AND SYMBOLS, REFER TO THE LEGEND DRAWINGS.
2. THIS DETAIL SHOWS CABLE REQUIREMENTS FOR SECURITY SYSTEM COMPONENTS ONLY. ARCHITECTURAL REQUIREMENTS AND DOOR HARDWARE MAY BE DIFFERENT THAN INDICATED. ELECTRICAL CONTRACTOR TO CONFIRM ALL ELECTRICAL ROUGH-IN MOUNTING HEIGHTS AND LOCATIONS FOR ACCESS CONTROL COMPONENTS. CONFIRM COMPATIBILITY WITH DOOR HARDWARE BEFORE ORDERING.
3. COORDINATE WIRING WITH DOOR HARDWARE INSTALLATION.
4. HEIGHT TO BE CONFIRMED ON SITE.
5. INSTALL 24VDC PSU INTO NEMA 12 ENCLOSURE C/W TERMINALS AND DIN RAIL AS REQUIRED.

KEY ITEMS:

1. MASTER 2 DOOR CONTROLLER
2. SLAVE 2 DOOR CONTROLLER
3. ACS POWER SUPPLY. SEE NOTE 5

THIS DRAWING MAY HAVE BEEN MODIFIED FROM ITS ORIGINAL SIZE. ALL SCALE NOTATIONS INDICATED ARE BASED ON 11"x17" FORMAT DRAWINGS

ISSUE	YY-MM-DD	REVISION
2	21-01-15	FOR CONSTRUCTION
1	20-10-15	FOR TENDER

Association of Professional Engineers & Geoscientists of Saskatchewan
CERTIFICATE OF AUTHORIZATION
MPE Engineering Ltd.
Number C1334
Permission to Consult held by:

Discipline	Sk. Reg. No.	Signature
ELECTRICAL	32675	

PROFESSIONAL ENGINEER R.G. OESTIE MEMBER 32675 2021-01-22 YR. MN. DAY. SASKATCHEWAN

MPE Engineering Ltd.

ENGLISH RIVER ENTERPRISES
PROPERTY MANAGEMENT LP

WASTEWATER TREATMENT PLANT
ELECTRICAL
ACCESS CONTROL DETAILS

DESIGNED	R.G.O	JOB	7603-002-00
DRAWN	T.S.	SCALE	N.T.S.
DATE	NOVEMBER 2020	DRAWING	E3.2

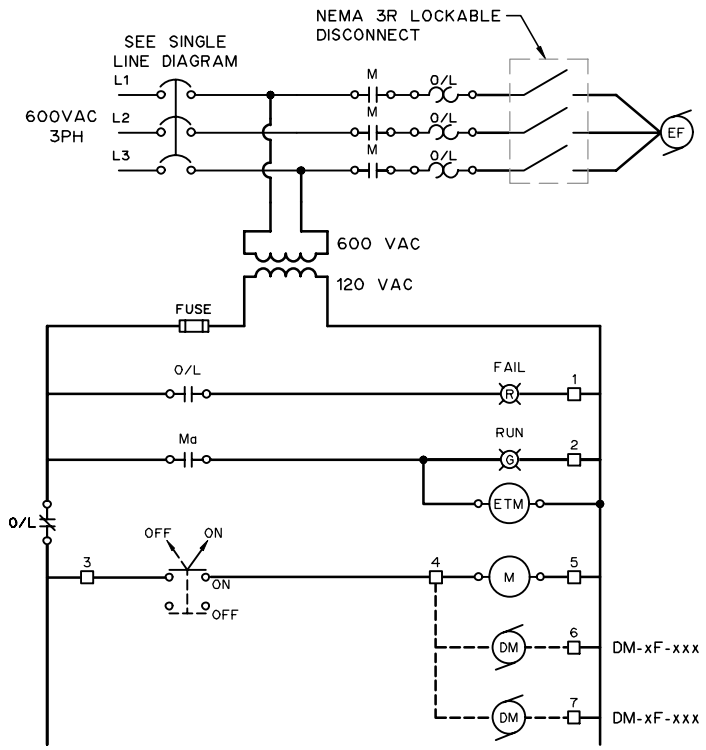

EF-101 EXHAUST FAN WIRING

xF TAG	LOAD (W)	DM TAG
EF-101	1119	DM-EF-101

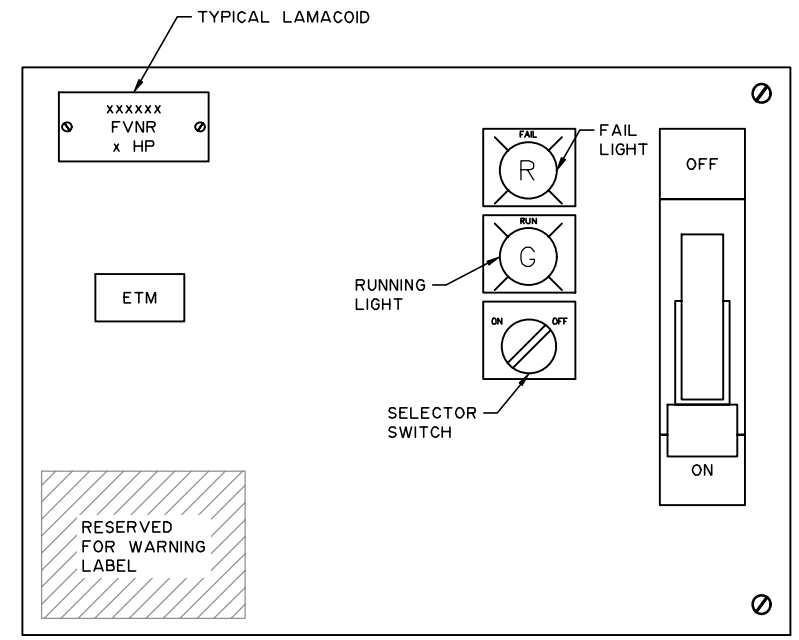

VOLTAGE NON REVERSING STARTER FRONT PANEL

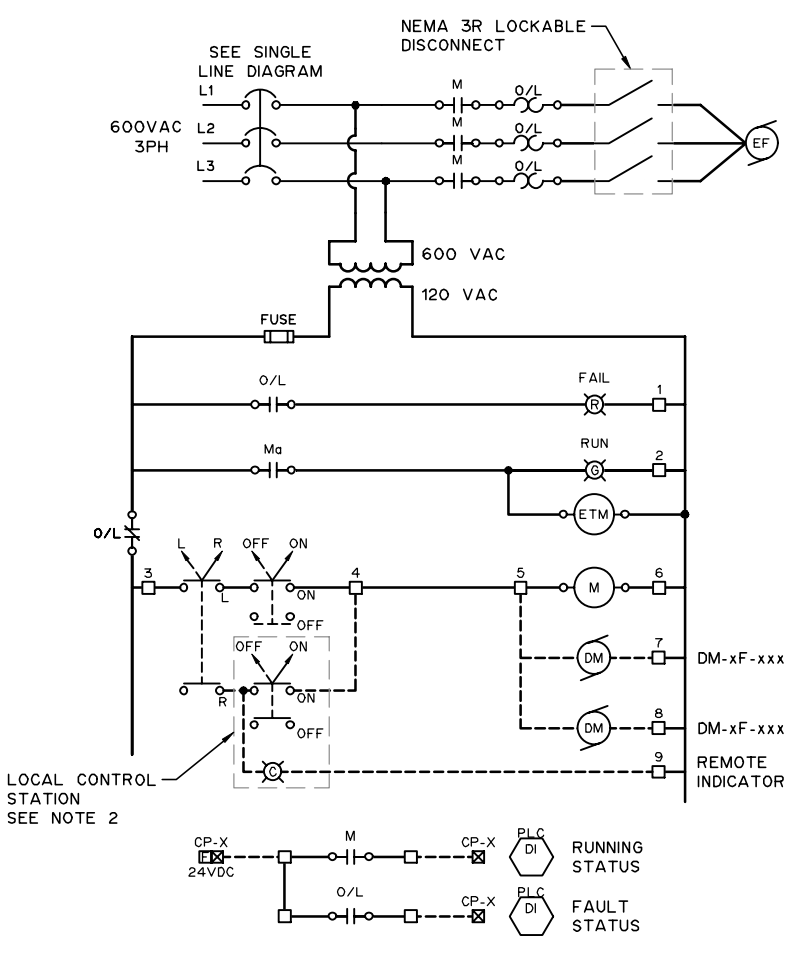

EF-102 EXHAUST FAN WIRING

xF TAG	LOAD (W)	DM TAG
EF-102	1119	DM-EF-102

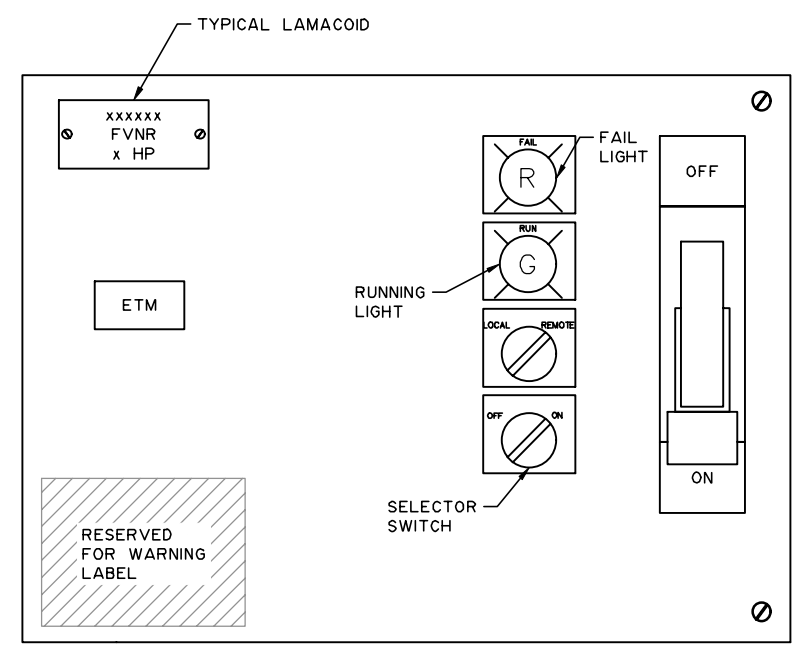

VOLTAGE NON REVERSING STARTER FRONT PANEL

NOTES:

1. FOR INFORMATION REGARDING GENERAL NOTES, UTILITIES, ABBREVIATIONS AND SYMBOLS, REFER TO THE LEGEND DRAWINGS.
2. MOUNT ON BUILDING EXTERIOR 1000 FROM HEADWORKS ENTRANCE.

THIS DRAWING MAY HAVE BEEN MODIFIED FROM ITS ORIGINAL SIZE. ALL SCALE NOTATIONS INDICATED ARE BASED ON 11"x17" FORMAT DRAWINGS

ISSUE	YY-MM-DD	REVISION
2	21-01-15	FOR CONSTRUCTION
1	20-10-15	FOR TENDER

Association of Professional Engineers & Geoscientists of Saskatchewan
CERTIFICATE OF AUTHORIZATION
MPE Engineering Ltd.
Number C1334
Permission to Consult held by:

Discipline	Sk. Reg. No.	Signature
ELECTRICAL	32675	

PROFESSIONAL ENGINEER
R.G. OFSTIE
MEMBER 32675
2021-01-22
YR. MN. DAY.
SASKATCHEWAN

MPE Engineering Ltd.

ENGLISH RIVER ENTERPRISES
PROPERTY MANAGEMENT LP

WASTEWATER TREATMENT PLANT
ELECTRICAL
SCHEMATICS

DESIGNED	R.G.O.	JOB	7603-002-00
DRAWN	T.S.	SCALE	N.T.S.
DATE	NOVEMBER 2020	DRAWING	E4.1

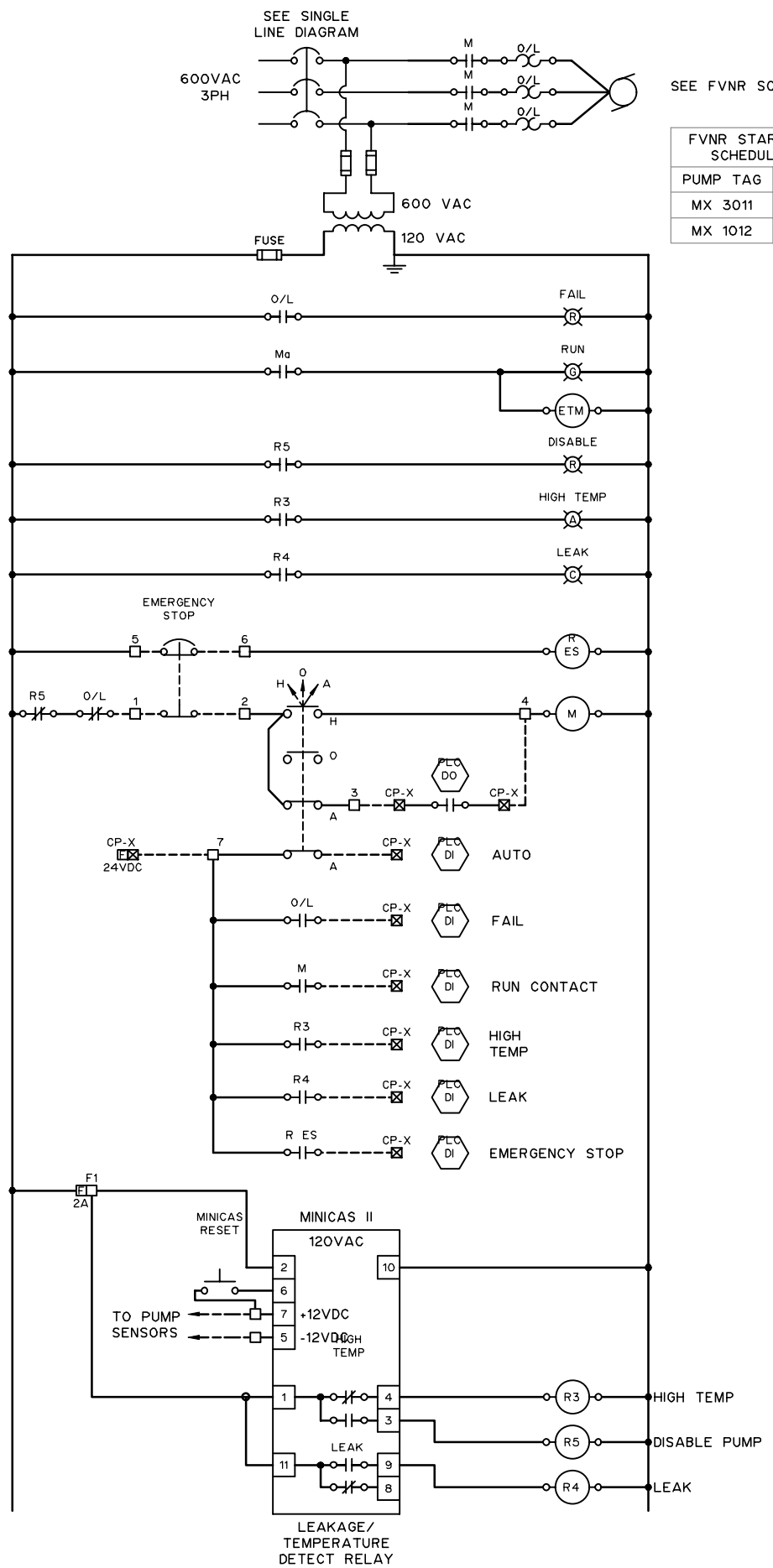

SEE FVNR SCHEDULE

FVNR STARTER SCHEDULE	
PUMP TAG	HP
MX 3011	2.4
MX 1012	2.4

TYPICAL FULL VOLTAGE NON REVERSING STARTER WITH MINICAS

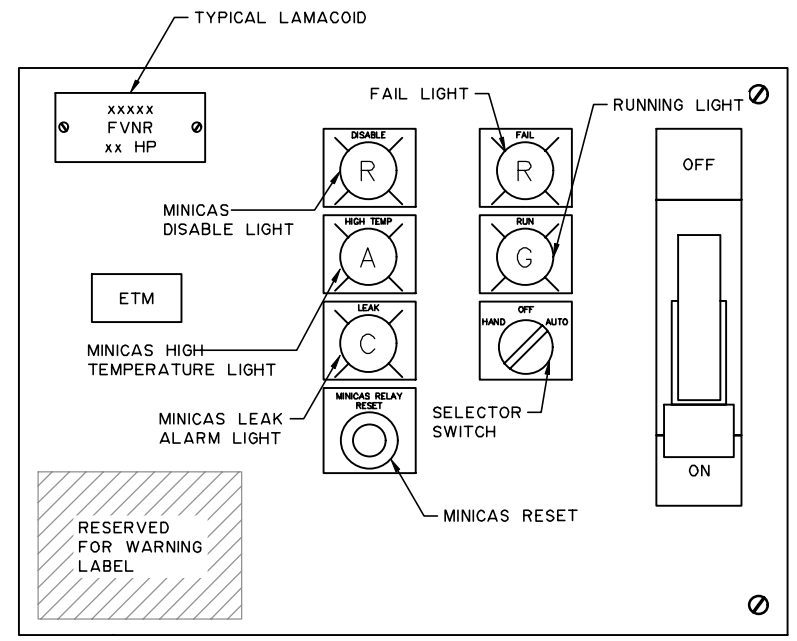

TYPICAL FULL VOLTAGE NON REVERSING STARTER WITH MINICAS FRONT PANEL

NOTES:

1. FOR INFORMATION REGARDING GENERAL NOTES, UTILITIES, ABBREVIATIONS AND SYMBOLS, REFER TO THE LEGEND DRAWINGS.

THIS DRAWING MAY HAVE BEEN MODIFIED FROM ITS ORIGINAL SIZE. ALL SCALE NOTATIONS INDICATED ARE BASED ON 11"x17" FORMAT DRAWINGS

ISSUE	YY-MM-DD	REVISION
2	21-01-15	FOR CONSTRUCTION
1	20-10-15	FOR TENDER

Association of Professional Engineers & Geoscientists of Saskatchewan
CERTIFICATE OF AUTHORIZATION
MPE Engineering Ltd.
Number C1334
Permission to Consult held by:

Discipline	Sk. Reg. No.	Signature
ELECTRICAL	32675	

PROFESSIONAL ENGINEER
R.G. DESTIE
MEMBER 32675
2021-01-22
YR. MN. DAY
SASKATCHEWAN

MPE Engineering Ltd.

ENGLISH RIVER ENTERPRISES
PROPERTY MANAGEMENT LP

WASTEWATER TREATMENT PLANT
ELECTRICAL
SCHEMATICS

DESIGNED	R.G.O.	JOB	7603-002-00
DRAWN	T.S.	SCALE	N.T.S.
DATE	NOVEMBER 2020	DRAWING	E4.2

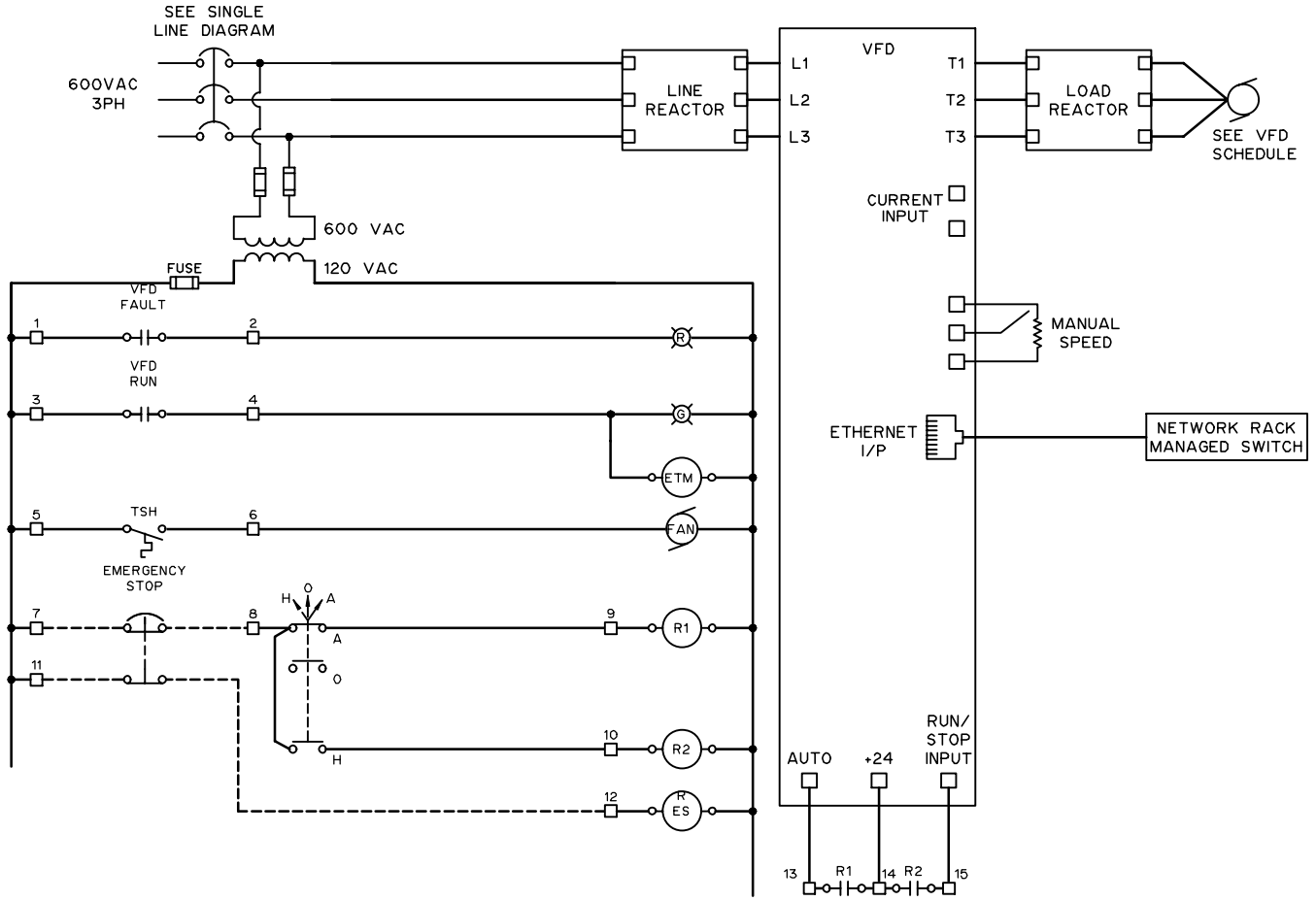

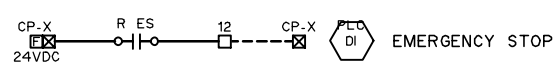

TYPICAL VFD WIRING

VFD SCHEDULE	
TAG	HP
BL 6301	10
BL 6302	10
BL 6303	10
BL 6201	15
BL 6101	15
BL 6102	15
P 4901-1	2.5
P 4901-2	2.5
RDT 3101	1/3

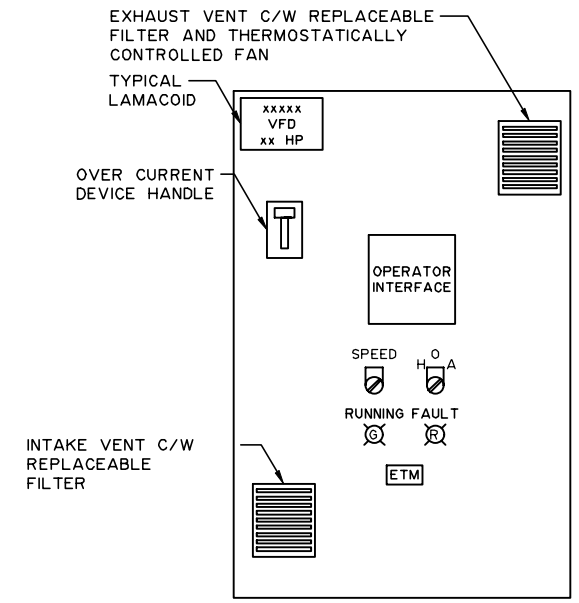

TYPICAL VFD FRONT PANEL

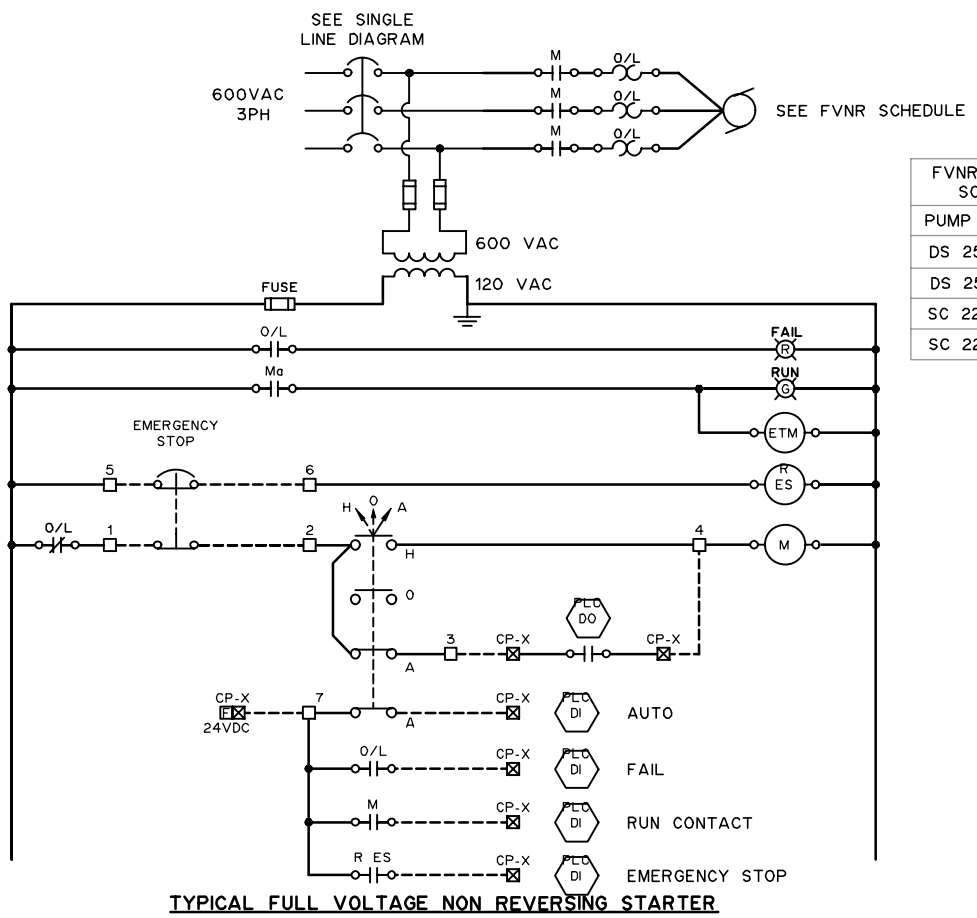

TYPICAL FULL VOLTAGE NON REVERSING STARTER

FVNR STARTER SCHEDULE	
PUMP TAG	HP
DS 2501A	1/2
DS 2501B	1/2
SC 2202A	1/2
SC 2202B	1/2

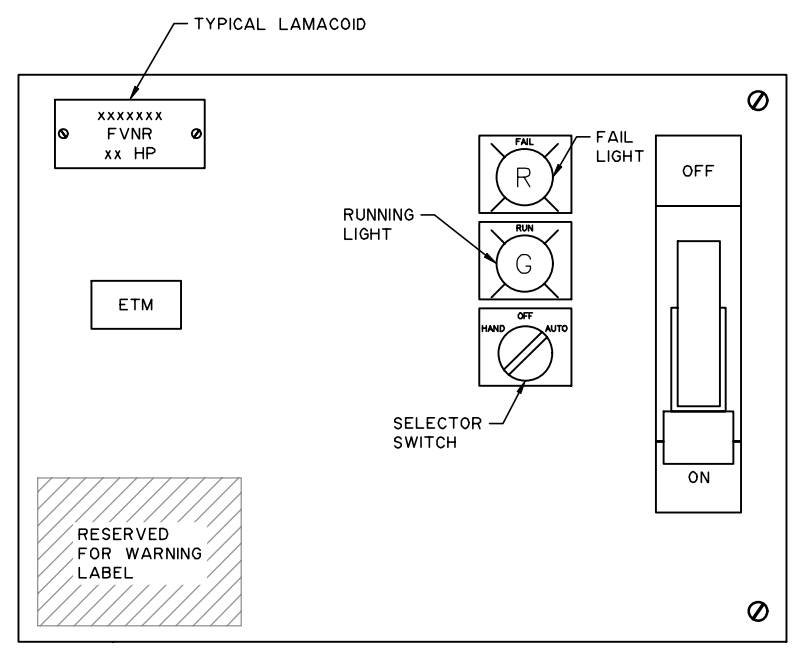

TYPICAL FULL VOLTAGE NON REVERSING STARTER FRONT PANEL

NOTES:

1. FOR INFORMATION REGARDING GENERAL NOTES, UTILITIES, ABBREVIATIONS AND SYMBOLS, REFER TO THE LEGEND DRAWINGS.

THIS DRAWING MAY HAVE BEEN MODIFIED FROM ITS ORIGINAL SIZE. ALL SCALE NOTATIONS INDICATED ARE BASED ON 11"x17" FORMAT DRAWINGS

ISSUE	YY-MM-DD	REVISION
2	21-01-15	FOR CONSTRUCTION
1	20-10-15	FOR TENDER

Association of Professional Engineers & Geoscientists of Saskatchewan
CERTIFICATE OF AUTHORIZATION
MPE Engineering Ltd.
Number C1334
Permission to Consult held by:

Discipline	SK. Reg. No.	Signature
ELECTRICAL	32675	

PROFESSIONAL ENGINEER
R.G. DESTIE
MEMBER 32675
2021-01-22
YR. MN. DAY
SASKATCHEWAN

MPE Engineering Ltd.

ENGLISH RIVER ENTERPRISES PROPERTY MANAGEMENT LP

WASTEWATER TREATMENT PLANT
ELECTRICAL
SCHEMATICS

DESIGNED	R.G.O.	JOB	7603-002-00
DRAWN	T.S.	SCALE	N.T.S.
DATE	NOVEMBER 2020	DRAWING	E4.3

VFD SCHEDULE	
TAG	HP
P 1101	2.7
P 1102	2.7
P 8101	2.7
P 8102	2.7

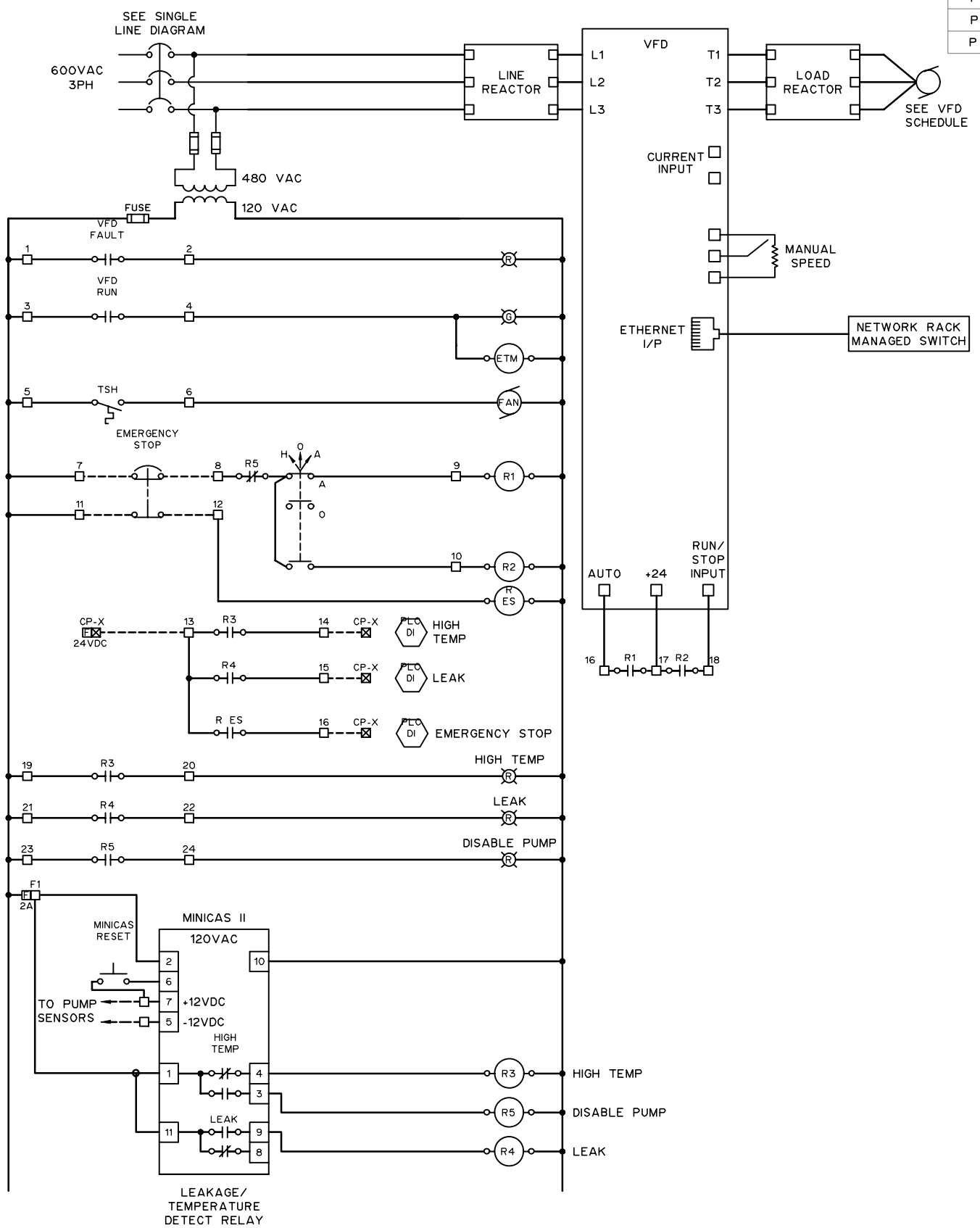

TYPICAL VFD WITH MINICAS WIRING

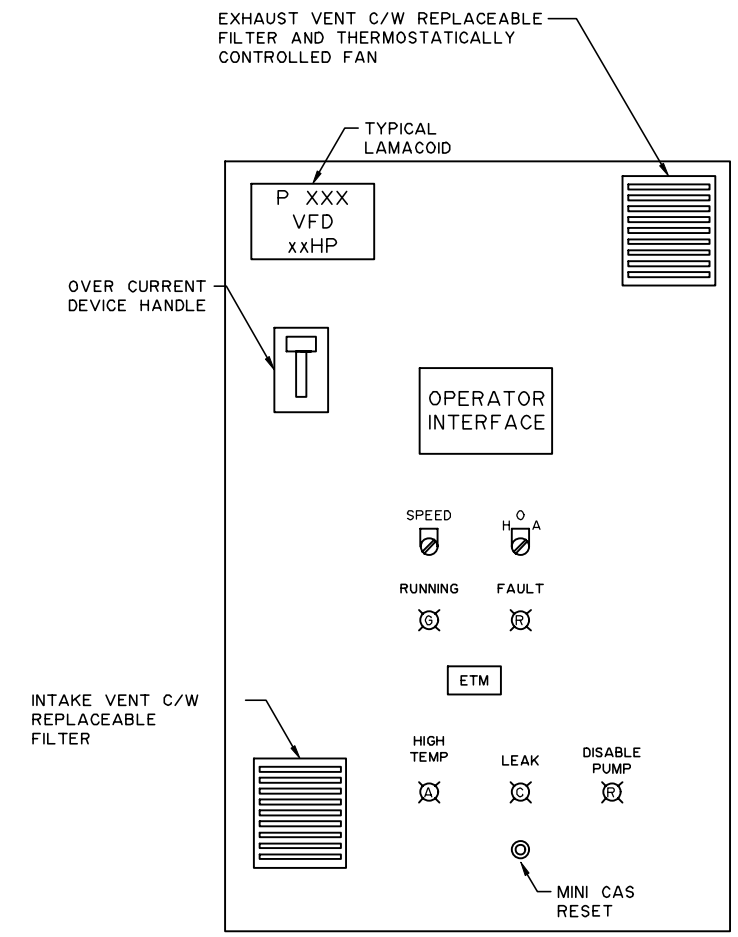

TYPICAL VFD WITH MINICAS FRONT PANEL

NOTES:

1. FOR INFORMATION REGARDING GENERAL NOTES, UTILITIES, ABBREVIATIONS AND SYMBOLS, REFER TO THE LEGEND DRAWINGS.

THIS DRAWING MAY HAVE BEEN MODIFIED FROM ITS ORIGINAL SIZE. ALL SCALE NOTATIONS INDICATED ARE BASED ON 11"x17" FORMAT DRAWINGS

ISSUE	YY-MM-DD	REVISION
2	21-01-15	FOR CONSTRUCTION
1	20-10-15	FOR TENDER

Association of Professional Engineers & Geoscientists of Saskatchewan
CERTIFICATE OF AUTHORIZATION
MPE Engineering Ltd.
Number C1334
Permission to Consult held by:

Discipline	Sk. Reg. No.	Signature
ELECTRICAL	32675	

PROFESSIONAL ENGINEER
R.G. OESTIE
MEMBER 32675
2021-01-22
YR. MN. DAY.
SASKATCHEWAN

MPE Engineering Ltd.

ENGLISH RIVER ENTERPRISES
PROPERTY MANAGEMENT LP

WASTEWATER TREATMENT PLANT
ELECTRICAL
SCHEMATICS

DESIGNED	R.G.O.	JOB	7603-002-00
DRAWN	T.S.	SCALE	N.T.S.
DATE	NOVEMBER 2020	DRAWING	E4.4

VFD SCHEDULE	
TAG	HP
P 4611-1	7.5
P 4611-2	7.5

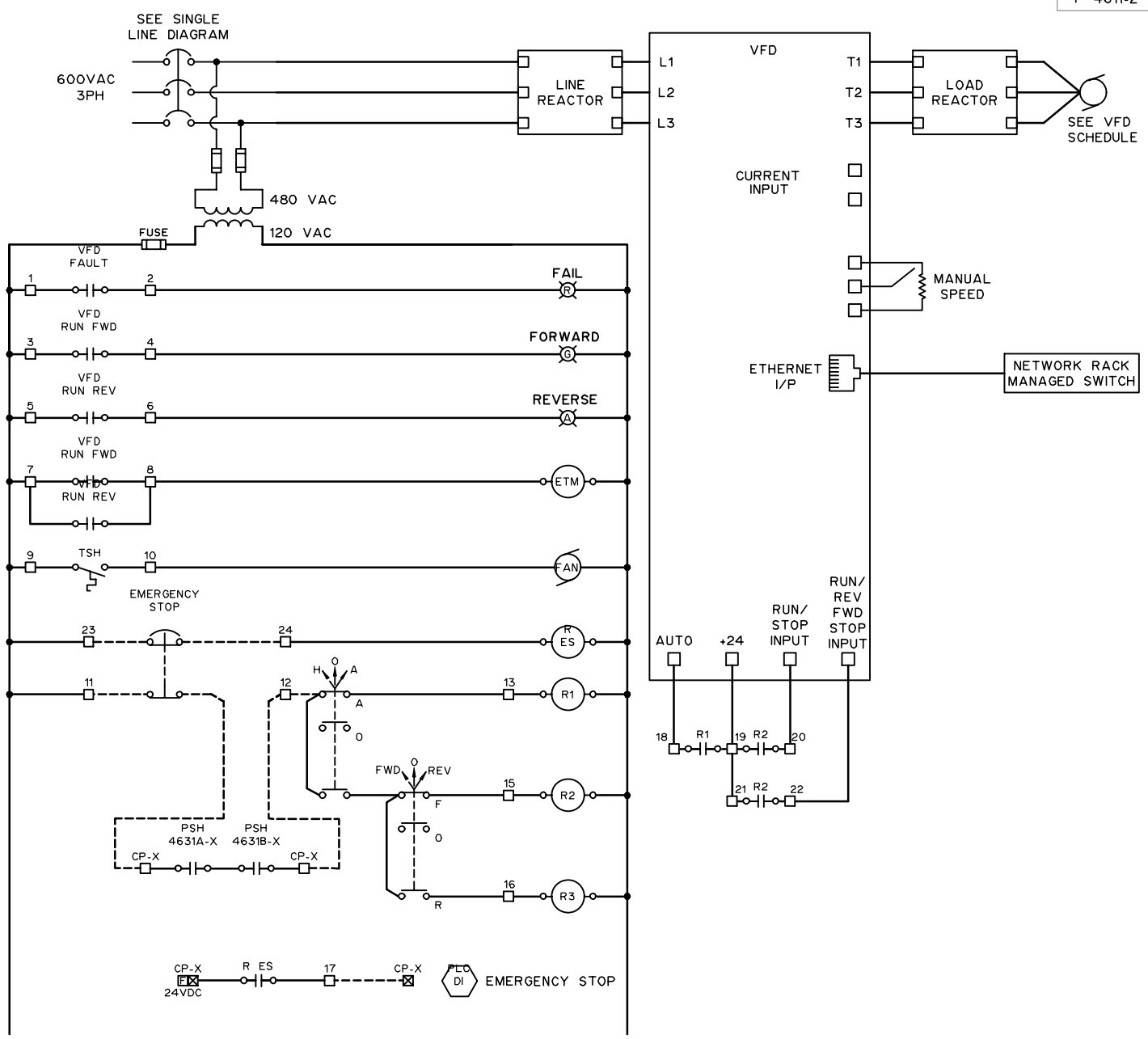

TYPICAL PERMEATE VFD WIRING

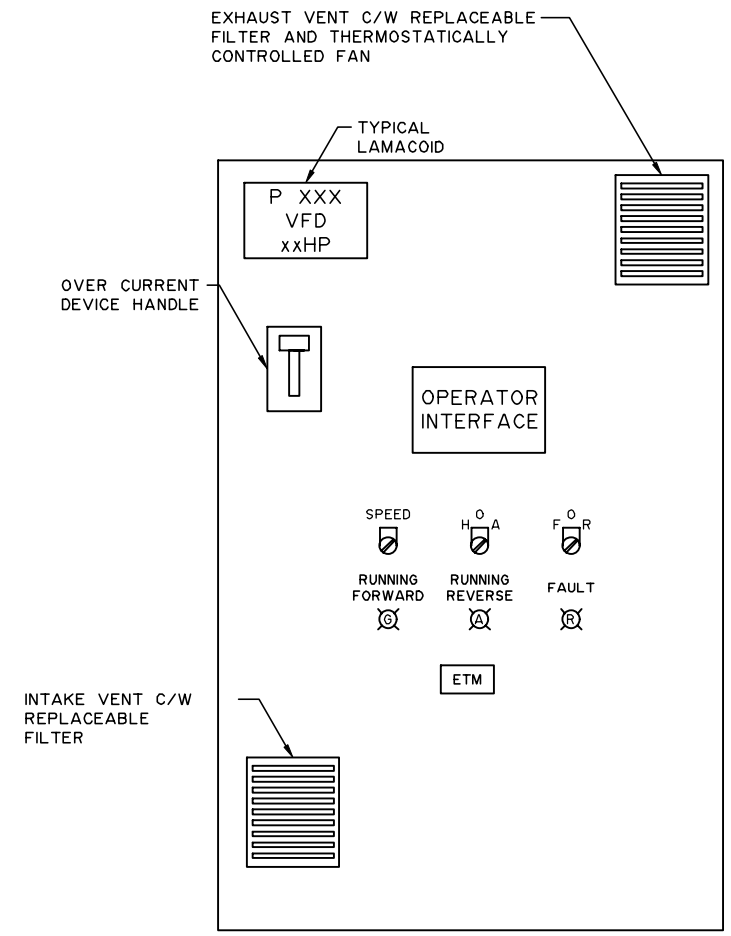

TYPICAL VFD WITH MINICAS FRONT PANEL

NOTES:

1. FOR INFORMATION REGARDING GENERAL NOTES, UTILITIES, ABBREVIATIONS AND SYMBOLS, REFER TO THE LEGEND DRAWINGS.

THIS DRAWING MAY HAVE BEEN MODIFIED FROM ITS ORIGINAL SIZE. ALL SCALE NOTATIONS INDICATED ARE BASED ON 11"x17" FORMAT DRAWINGS

ISSUE	YY-MM-DD	REVISION
2	21-01-15	FOR CONSTRUCTION
1	20-10-15	FOR TENDER

Association of Professional Engineers & Geoscientists of Saskatchewan
CERTIFICATE OF AUTHORIZATION
MPE Engineering Ltd.
Number C1334
Permission to Consult held by:
Discipline ELECTRICAL Sk. Reg. No. 32675 Signature

PROFESSIONAL ENGINEER R.G. DESTE MEMBER 32675 2021-01-22 YR. MN. DAY SASKATCHEWAN

MPE Engineering Ltd.

ENGLISH RIVER ENTERPRISES PROPERTY MANAGEMENT LP

WASTEWATER TREATMENT PLANT
ELECTRICAL
SCHEMATICS

DESIGNED	R.G.O.	JOB	7603-002-00
DRAWN	T.S.	SCALE	N.T.S.
DATE	NOVEMBER 2020	DRAWING	E4.5

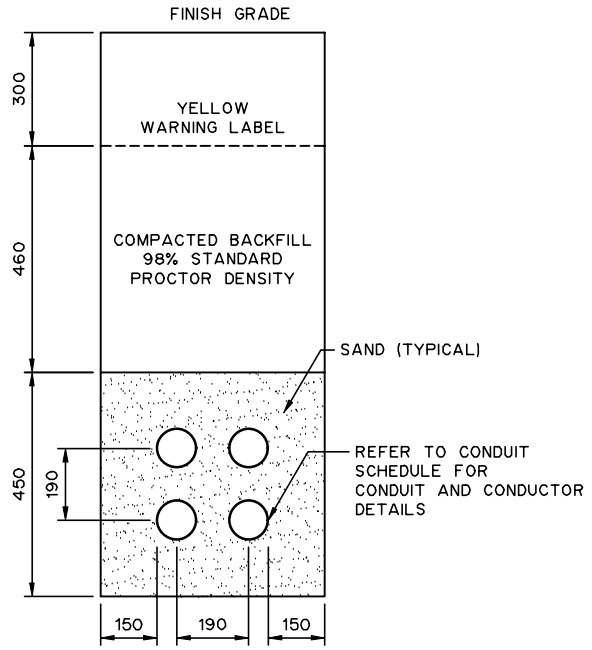

TYPICAL TRENCHING DETAIL

1 / E5.4

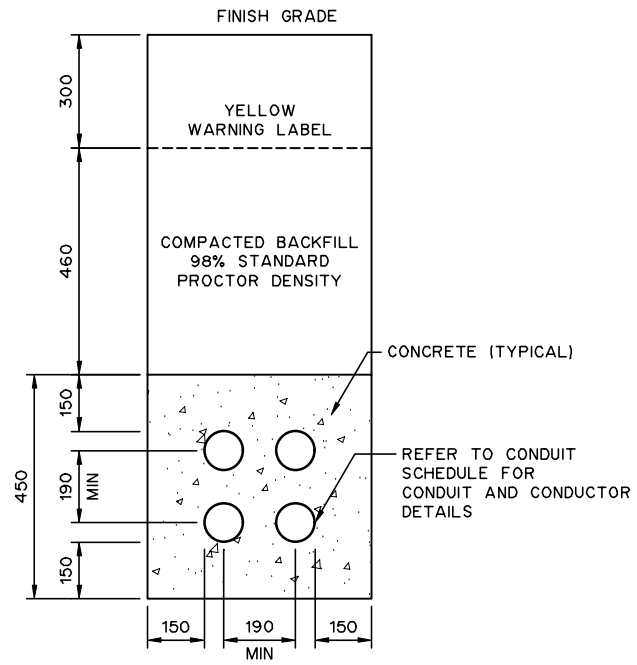

UTILITY POWER TRENCHING DETAIL

2 / E5.5

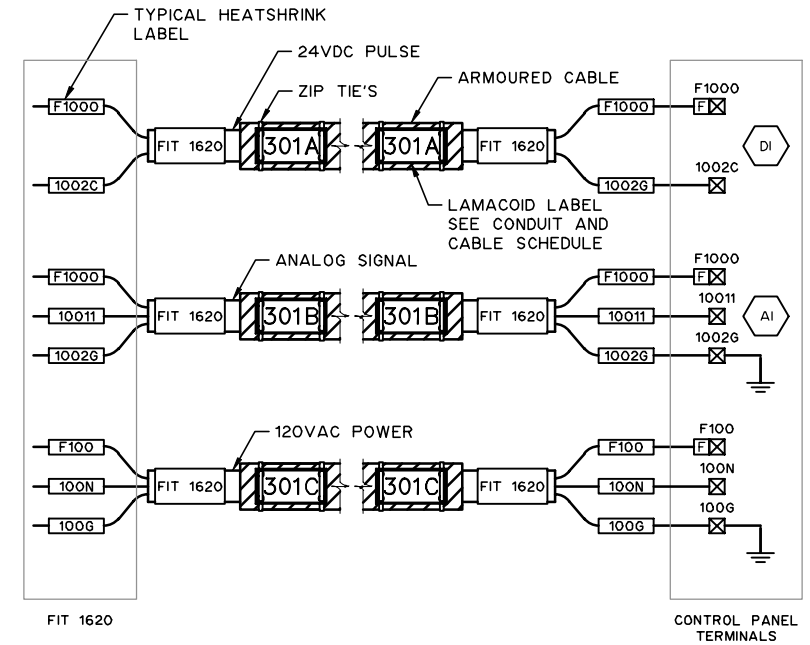

TYPICAL CONTROL AND INSTRUMENTATION WIRE LABELING

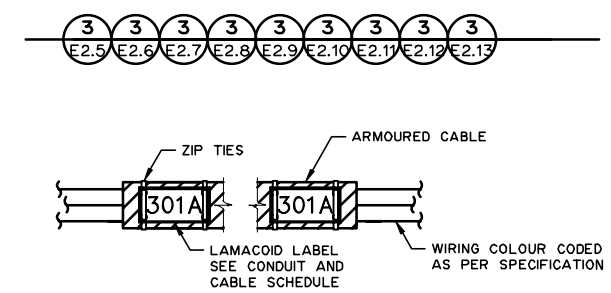

TYPICAL CONDUIT LABELLING

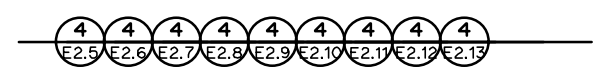

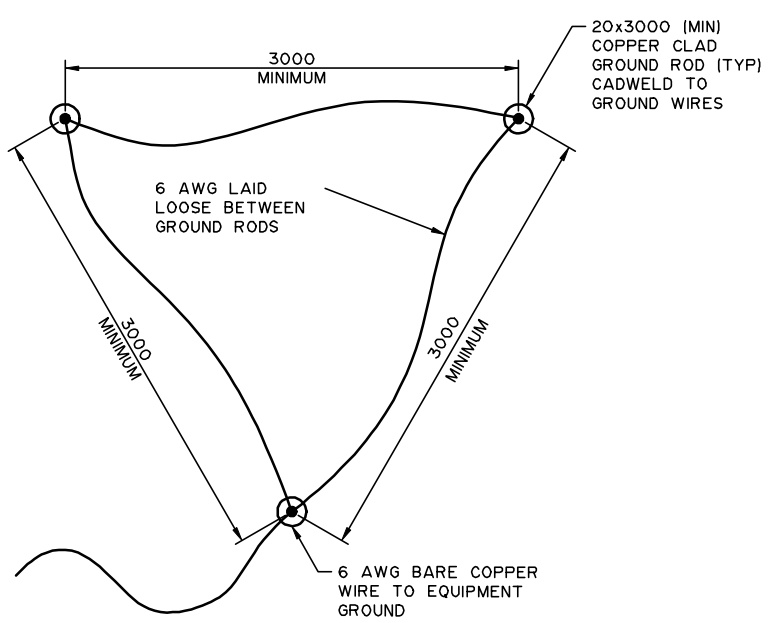

TYPICAL GROUND GRID DETAIL

5 / E0.2

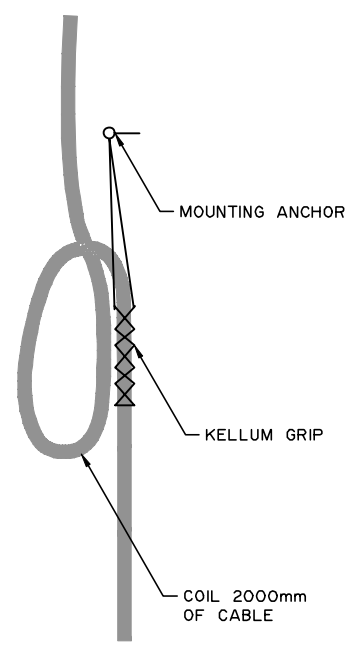

TYPICAL KELLUM GRIP DETAIL

6 / E5.7

NOTES:

1. FOR INFORMATION REGARDING GENERAL NOTES, UTILITIES, ABBREVIATIONS AND SYMBOLS, REFER TO THE LEGEND DRAWINGS.

THIS DRAWING MAY HAVE BEEN MODIFIED FROM ITS ORIGINAL SIZE. ALL SCALE NOTATIONS INDICATED ARE BASED ON 11"x17" FORMAT DRAWINGS

ISSUE	YY-MM-DD	REVISION
2	21-01-15	FOR CONSTRUCTION
1	20-10-15	FOR TENDER

Association of Professional Engineers & Geoscientists of Saskatchewan
CERTIFICATE OF AUTHORIZATION
MPE Engineering Ltd.
Number C1334
Permission to Consult held by:

Discipline	Sk. Reg. No.	Signature
ELECTRICAL	32675	

PROFESSIONAL ENGINEER
R.G. OESTIE
MEMBER 32675
2021-01-22
YR. MN. DAY.
SASKATCHEWAN

MPE Engineering Ltd.

ENGLISH RIVER ENTERPRISES
PROPERTY MANAGEMENT LP

WASTEWATER TREATMENT PLANT
ELECTRICAL
ELECTRICAL DETAILS

DESIGNED	R.G.O.	JOB	7603-002-00
DRAWN	T.S.	SCALE	N.T.S.
DATE	NOVEMBER 2020	DRAWING	E5.1

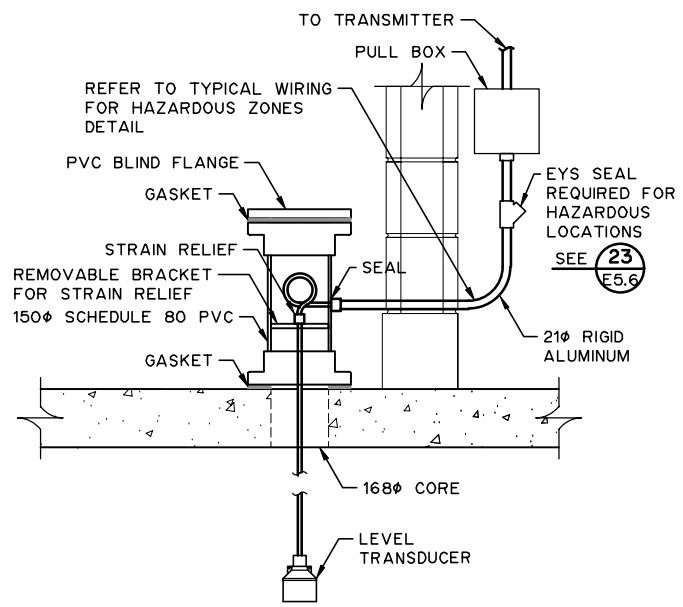

TYPICAL TRANSDUCER MOUNT THROUGH WALL

7 E1.6

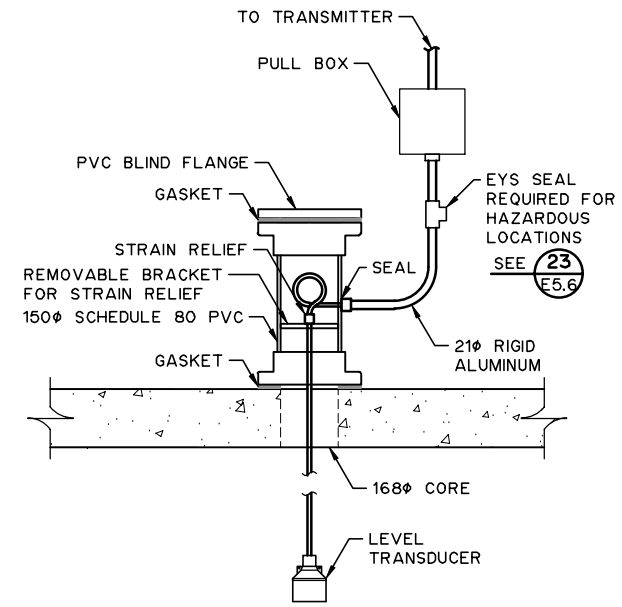

TYPICAL TRANSDUCER MOUNT FOR SLAB

8 E1.6

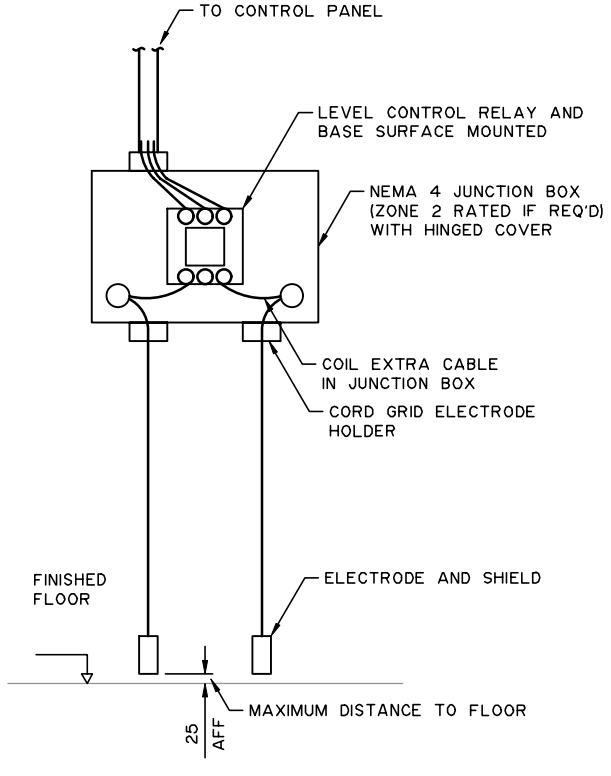

TYPICAL LEAK SWITCH DETAIL

9 E1.5 9 E1.6

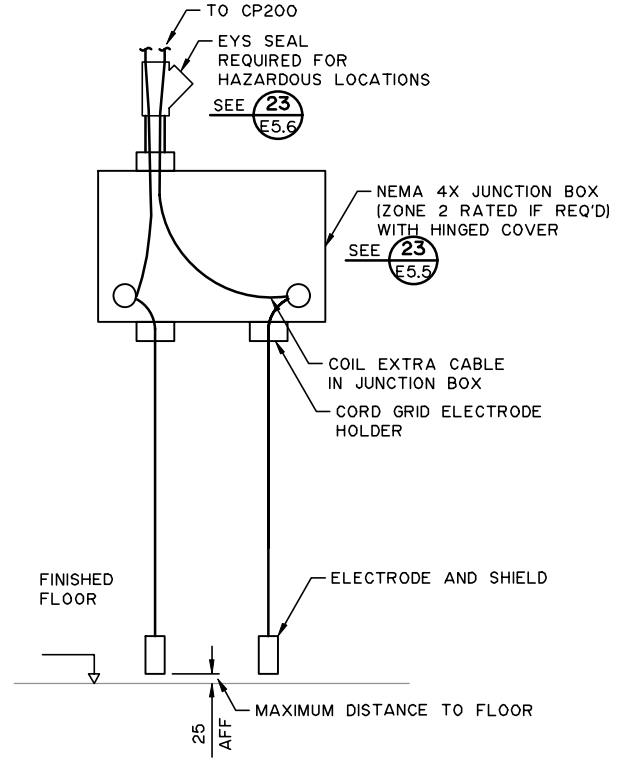

HEADWORKS LEAK SWITCH DETAIL

10 E1.6

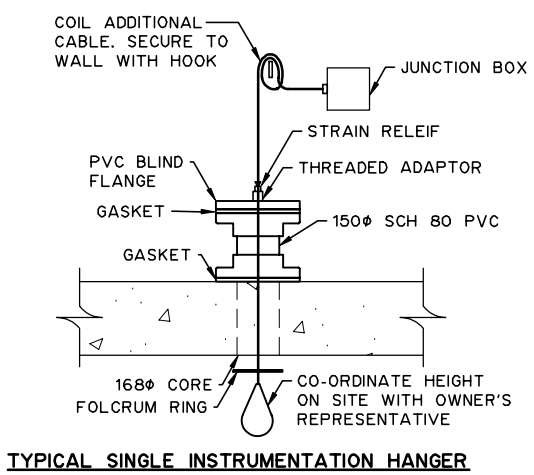

TYPICAL SINGLE INSTRUMENTATION HANGER

11 E1.6

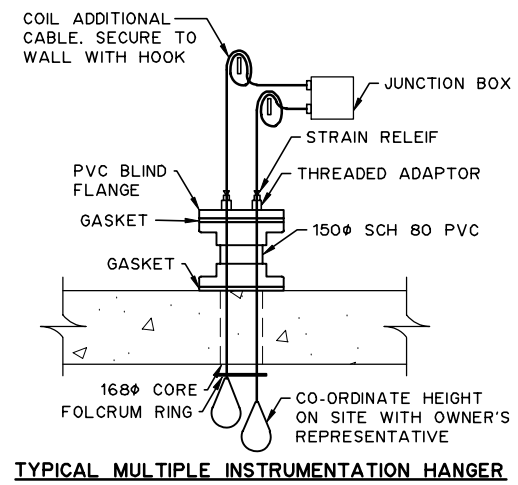

TYPICAL MULTIPLE INSTRUMENTATION HANGER

12 E1.6

NOTES:

1. FOR INFORMATION REGARDING GENERAL NOTES, UTILITIES, ABBREVIATIONS AND SYMBOLS, REFER TO THE LEGEND DRAWINGS.

THIS DRAWING MAY HAVE BEEN MODIFIED FROM ITS ORIGINAL SIZE. ALL SCALE NOTATIONS INDICATED ARE BASED ON 11"x17" FORMAT DRAWINGS

ISSUE	YY-MM-DD	REVISION
2	21-01-15	FOR CONSTRUCTION
1	20-10-15	FOR TENDER

Association of Professional Engineers & Geoscientists of Saskatchewan
CERTIFICATE OF AUTHORIZATION
MPE Engineering Ltd.
Number C1334
Permission to Consult held by:

Discipline	Sk. Reg. No.	Signature
ELECTRICAL	32675	

PROFESSIONAL ENGINEER
R.G. DESTIE
MEMBER 32675
2021-01-22
YR. MN. DAY
SASKATCHEWAN

MPE Engineering Ltd.

ENGLISH RIVER ENTERPRISES PROPERTY MANAGEMENT LP

WASTEWATER TREATMENT PLANT

ELECTRICAL

ELECTRICAL DETAILS

DESIGNED	R.G.O.	JOB	7603-002-00
DRAWN	T.S.	SCALE	N.T.S.
DATE	NOVEMBER 2020	DRAWING	E5.2

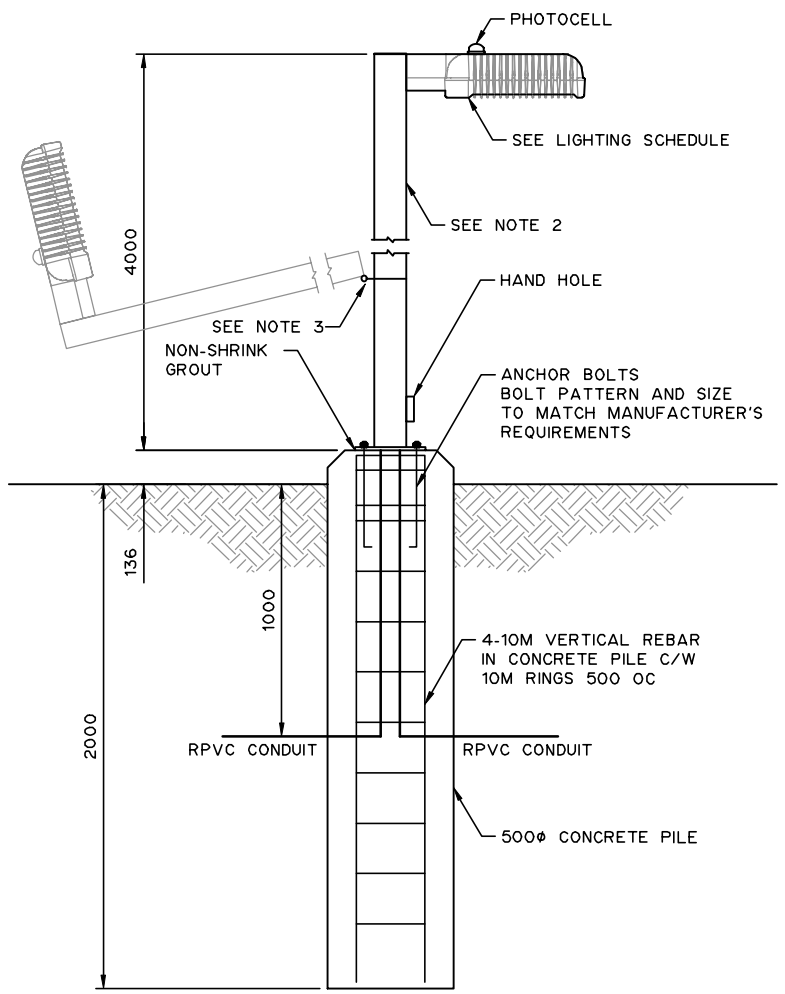

TYPICAL LIGHT STANDARD DETAIL

13
E0.2

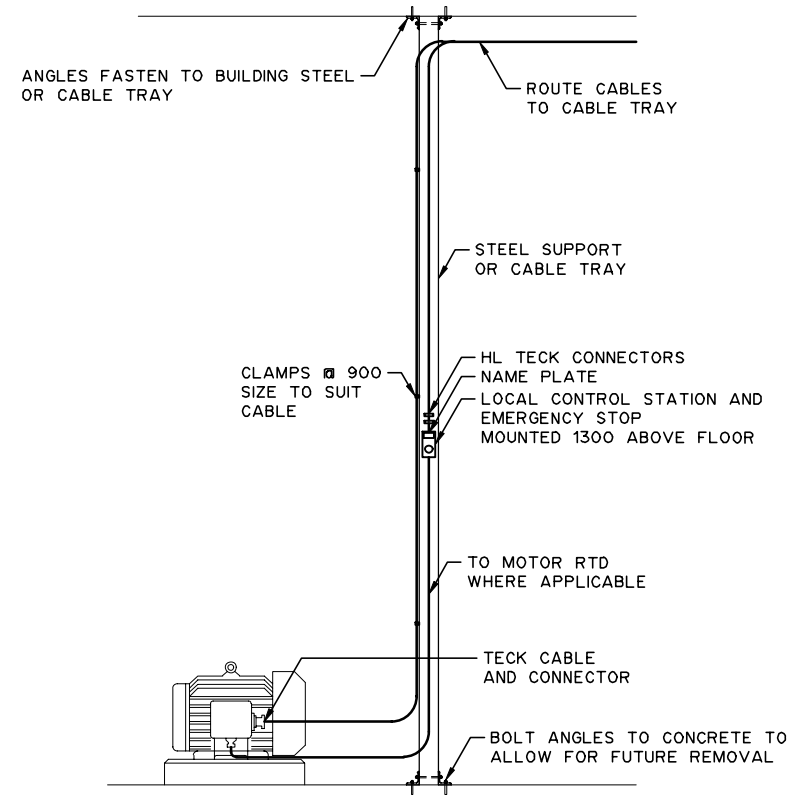

MOTOR CONNECTION SEPARATE POWER AND CONTROL CABLES DETAIL

14
E1.1

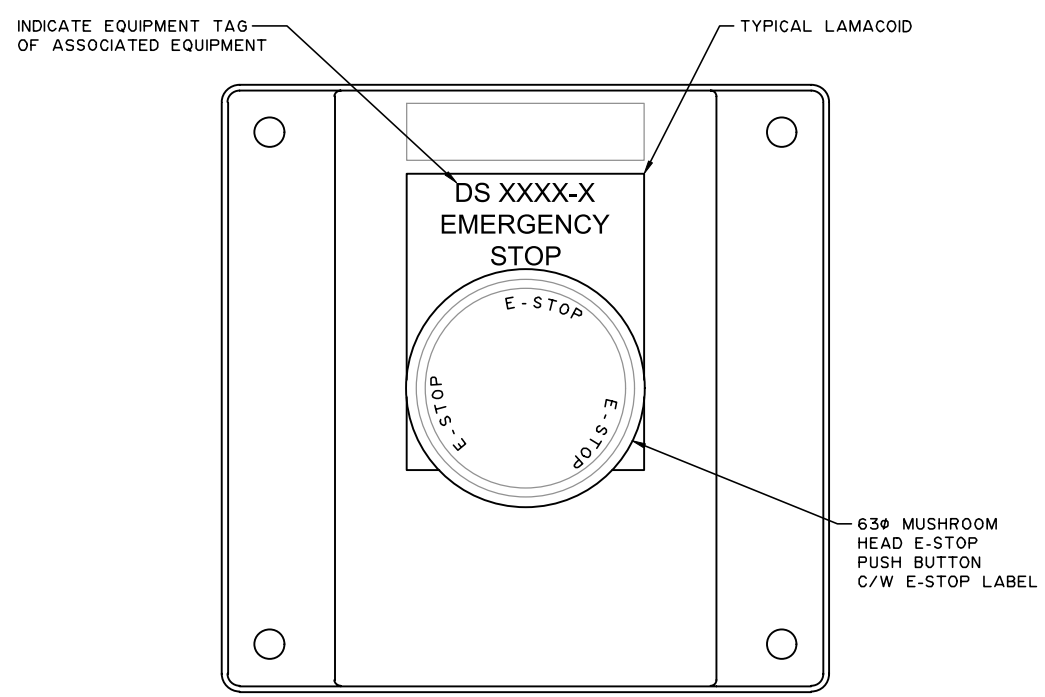

EMERGENCY STOP STATION DETAIL

15
E1.1

NOTES:

1. FOR INFORMATION REGARDING GENERAL NOTES, UTILITIES, ABBREVIATIONS AND SYMBOLS, REFER TO THE LEGEND DRAWINGS.
2. POLE TO BE CECO CE 5SQH SERIES HINGED POLE C/W ALL ACCESSORIES REQUIRED FOR A COMPLETE INSTALLATION. FINISH TO BE DARK BRONZE.
3. COORDINATE PIVOT DIRECTION TO AVOID INTERFERENCE WITH OTHER ELEMENTS.

THIS DRAWING MAY HAVE BEEN MODIFIED FROM ITS ORIGINAL SIZE. ALL SCALE NOTATIONS INDICATED ARE BASED ON 11"x17" FORMAT DRAWINGS

ISSUE	YY-MM-DD	REVISION
2	21-01-15	FOR CONSTRUCTION
1	20-10-15	FOR TENDER

Association of Professional Engineers & Geoscientists of Saskatchewan
CERTIFICATE OF AUTHORIZATION
MPE Engineering Ltd.
Number C1334
Permission to Consult held by:

Discipline	Sk. Reg. No.	Signature
ELECTRICAL	32675	

PROFESSIONAL ENGINEER
R.G. DESTIE
MEMBER 32675
2021-01-22
YR. MN. DAY.
SASKATCHEWAN

MPE Engineering Ltd.

ENGLISH RIVER ENTERPRISES PROPERTY MANAGEMENT LP

WASTEWATER TREATMENT PLANT
ELECTRICAL
ELECTRICAL DETAILS

DESIGNED	R.G.O.	JOB	7603-002-00
DRAWN	T.S.	SCALE	N.T.S.
DATE	NOVEMBER 2020	DRAWING	E5.3

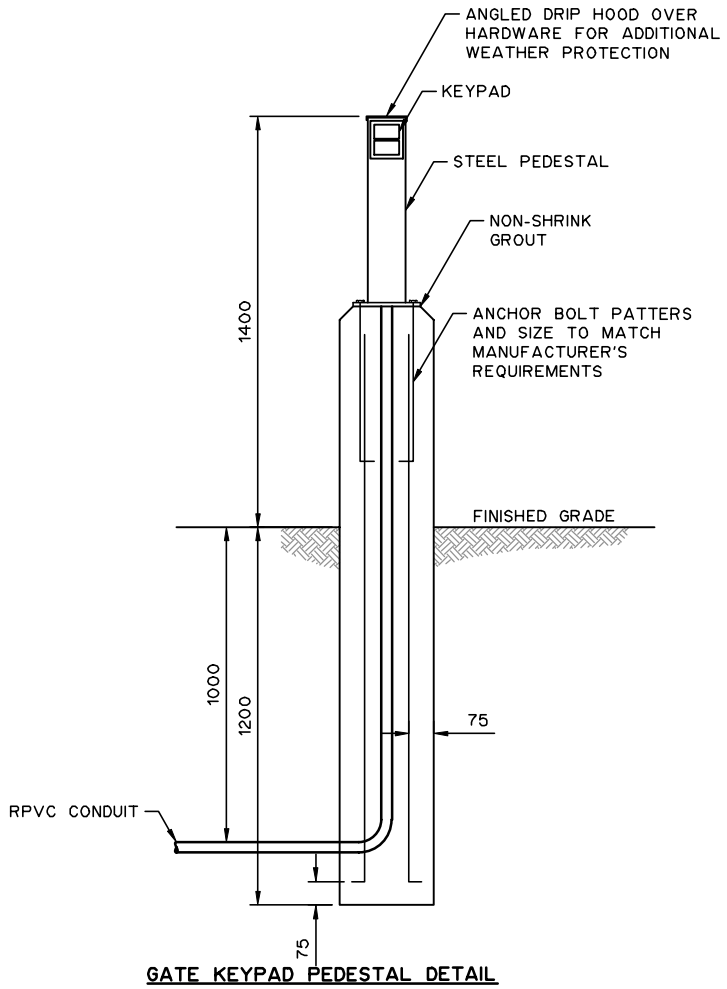

GATE KEYPAD PEDESTAL DETAIL

16 / E0.2

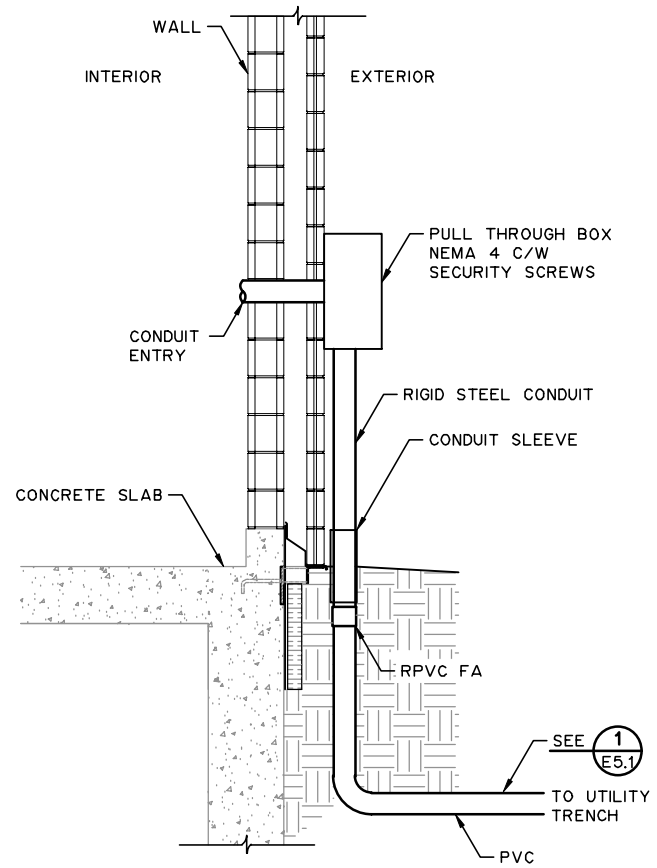

STANDARD CONDUIT ENTRY DETAIL

17 / E0.2

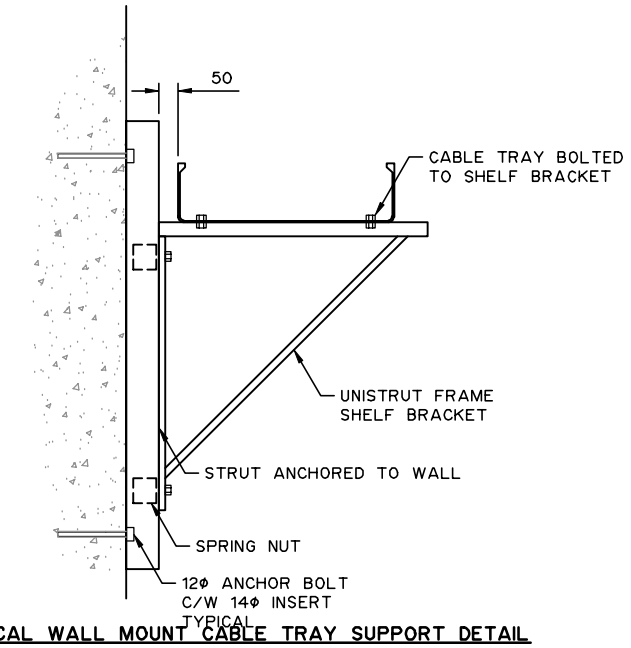

TYPICAL WALL MOUNT CABLE TRAY SUPPORT DETAIL

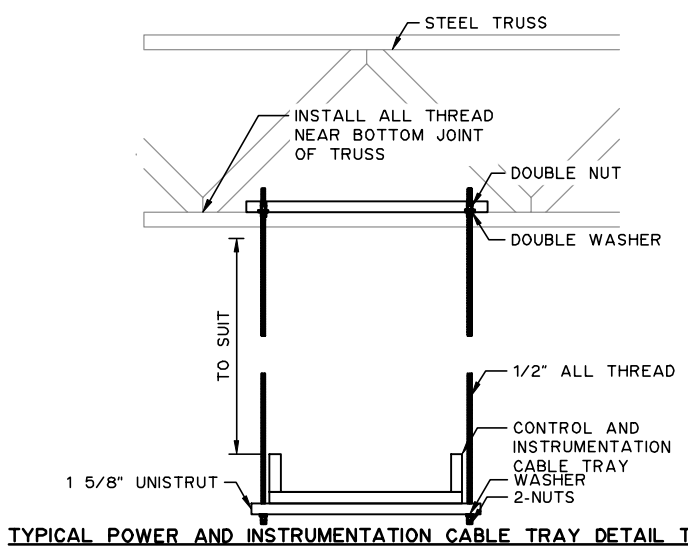

TYPICAL POWER AND INSTRUMENTATION CABLE TRAY DETAIL TYPE 1

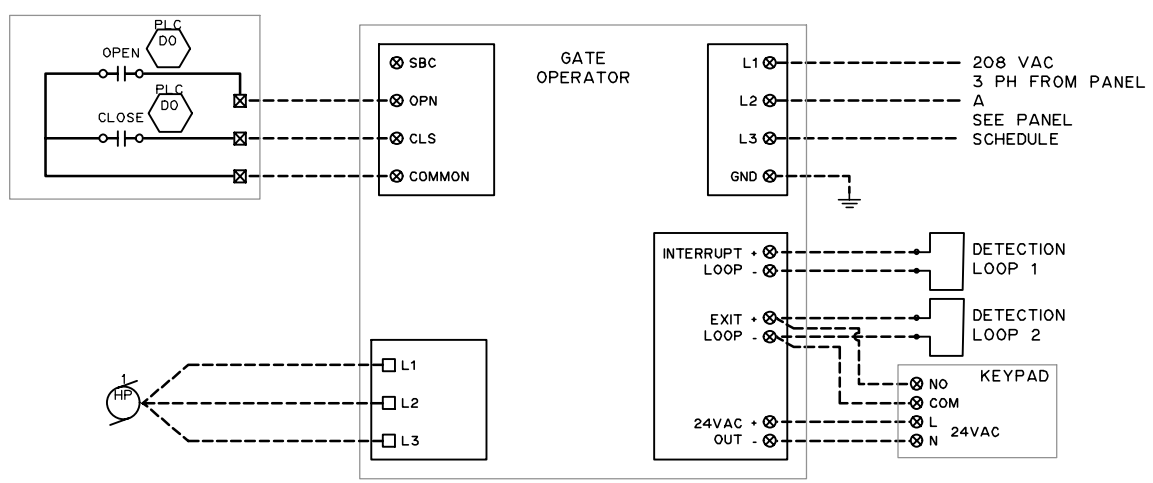

GATE OPERATOR WIRING DETAIL

18 / E0.1

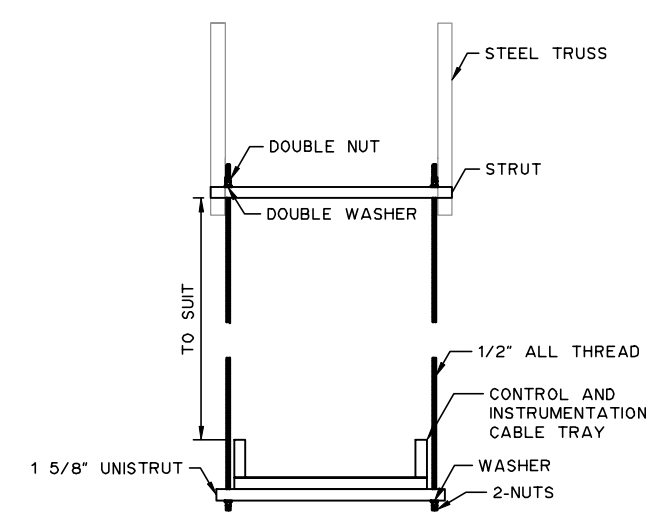

TYPICAL POWER AND INSTRUMENTATION CABLE TRAY DETAIL TYPE 2

19 / E1.1 19 / E1.2

NOTES:

1. FOR INFORMATION REGARDING GENERAL NOTES, UTILITIES, ABBREVIATIONS AND SYMBOLS, REFER TO THE LEGEND DRAWINGS.

THIS DRAWING MAY HAVE BEEN MODIFIED FROM ITS ORIGINAL SIZE. ALL SCALE NOTATIONS INDICATED ARE BASED ON 11"x17" FORMAT DRAWINGS

ISSUE	YY-MM-DD	REVISION
2	21-01-15	FOR CONSTRUCTION
1	20-10-15	FOR TENDER

Association of Professional Engineers & Geoscientists of Saskatchewan
CERTIFICATE OF AUTHORIZATION
MPE Engineering Ltd.
Number C1334
Permission to Consult held by:

Discipline	Sk. Reg. No.	Signature
ELECTRICAL	32675	

PROFESSIONAL ENGINEER
R.G. DESTIE
MEMBER 32675
2021-01-22
YR. MN. DAY
SASKATCHEWAN

MPE Engineering Ltd.

ENGLISH RIVER ENTERPRISES PROPERTY MANAGEMENT LP

WASTEWATER TREATMENT PLANT
ELECTRICAL
ELECTRICAL DETAILS

DESIGNED	R.G.O.	JOB	7603-002-00
DRAWN	T.S.	SCALE	N.T.S.
DATE	NOVEMBER 2020	DRAWING	E5.4

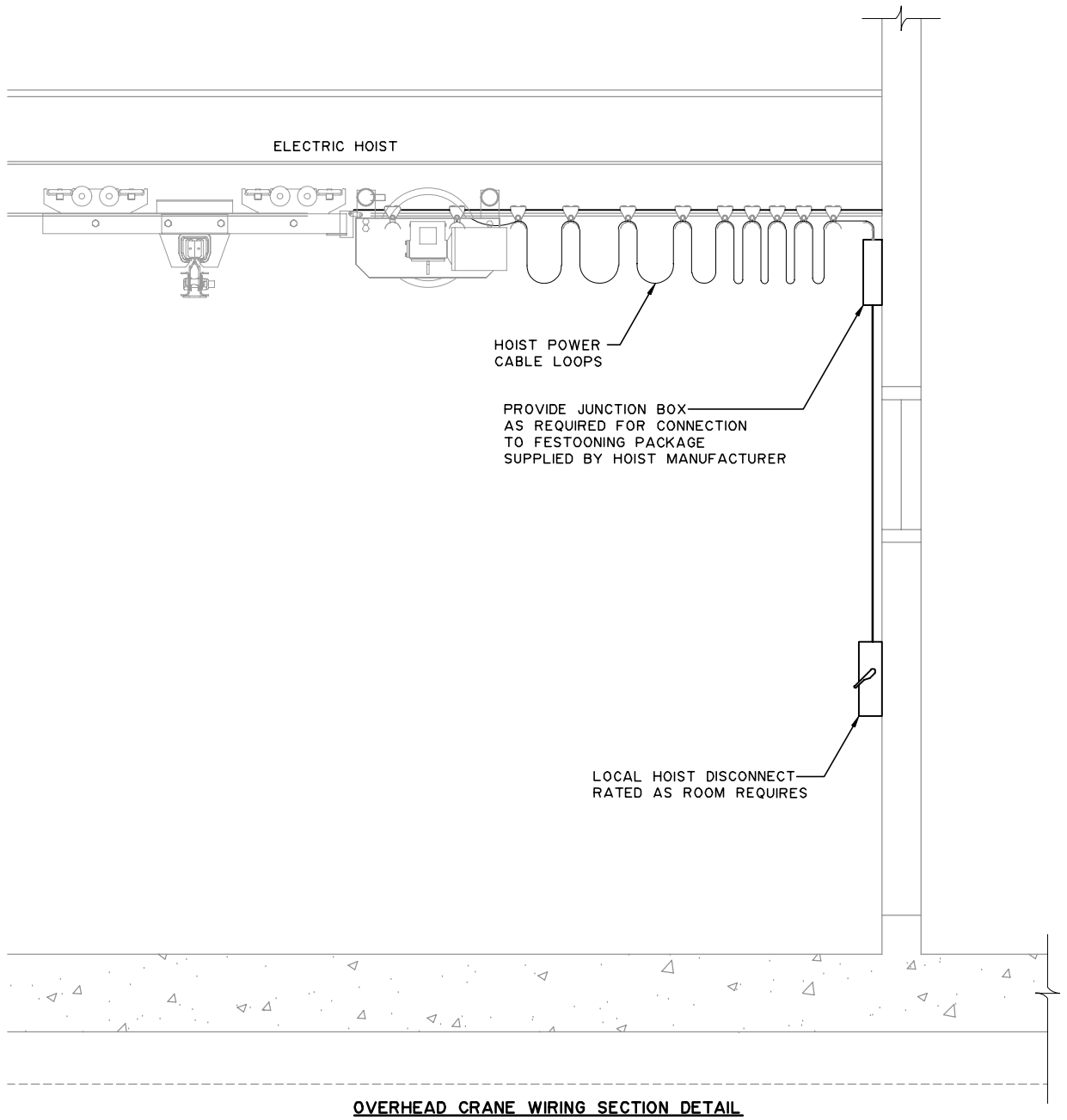

OVERHEAD CRANE WIRING SECTION DETAIL

20 / E1.2

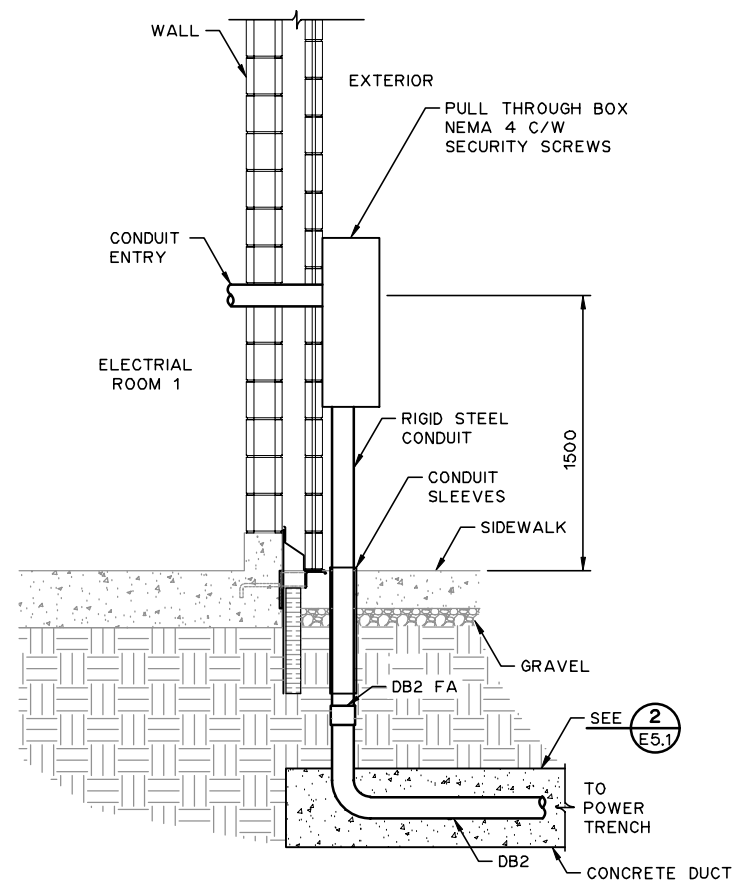

SERVICE ENTRANCE DETAIL

21 / E1.2 21 / E0.2

NOTES:

1. FOR INFORMATION REGARDING GENERAL NOTES, UTILITIES, ABBREVIATIONS AND SYMBOLS, REFER TO THE LEGEND DRAWINGS.

THIS DRAWING MAY HAVE BEEN MODIFIED FROM ITS ORIGINAL SIZE. ALL SCALE NOTATIONS INDICATED ARE BASED ON 11"x17" FORMAT DRAWINGS

ISSUE	YY-MM-DD	REVISION
2	21-01-15	FOR CONSTRUCTION
1	20-10-15	FOR TENDER

Association of Professional Engineers & Geoscientists of Saskatchewan
CERTIFICATE OF AUTHORIZATION
MPE Engineering Ltd.
Number C1334
Permission to Consult held by:

Discipline	Sk. Reg. No.	Signature
ELECTRICAL	32675	

PROFESSIONAL ENGINEER
R.G. OESTIE
MEMBER 32675
2021-01-22
YR. MN. DAY.
SASKATCHEWAN

MPE Engineering Ltd.

ENGLISH RIVER ENTERPRISES PROPERTY MANAGEMENT LP

WASTEWATER TREATMENT PLANT

ELECTRICAL

ELECTRICAL DETAILS

DESIGNED	R.G.O.	JOB	7603-002-00
DRAWN	T.S.	SCALE	N.T.S.
DATE	NOVEMBER 2020	DRAWING	E5.5

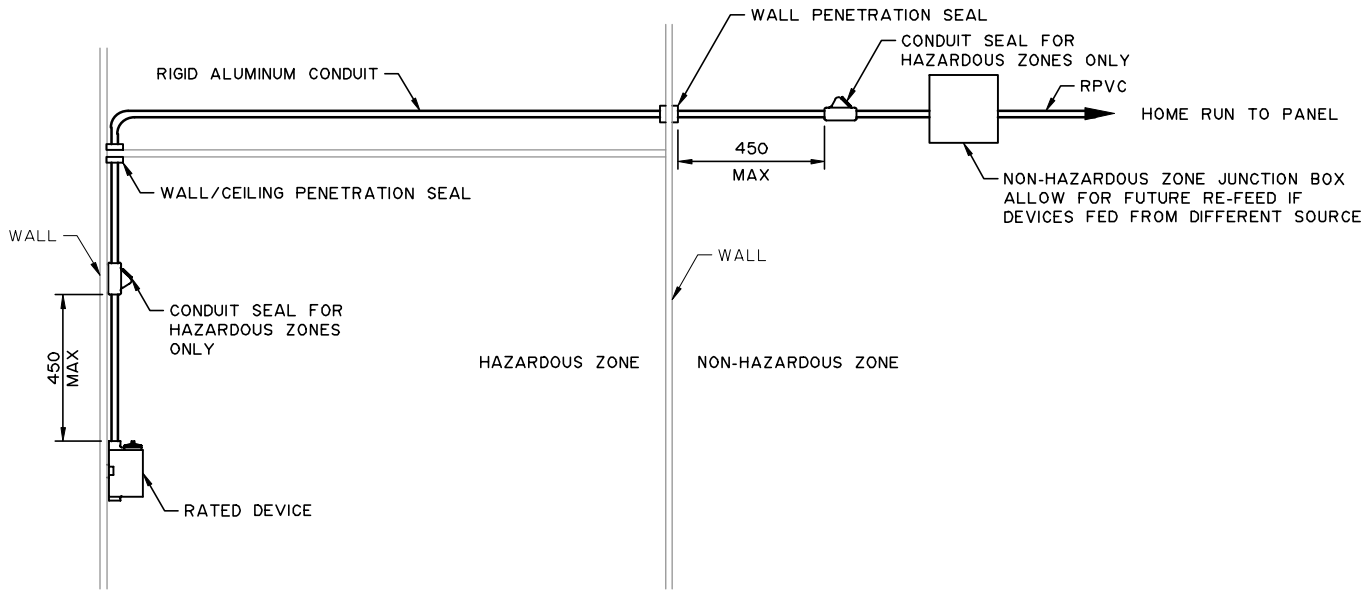

TYPICAL WIRING FOR HAZARDOUS ZONES DETAIL

22 E1.1 / 22 E1.2

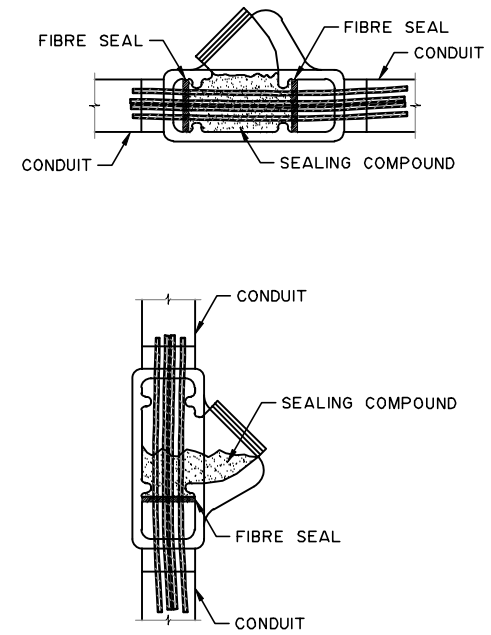

HAZARDOUS CONDUIT SEAL DETAIL

23 E5.2

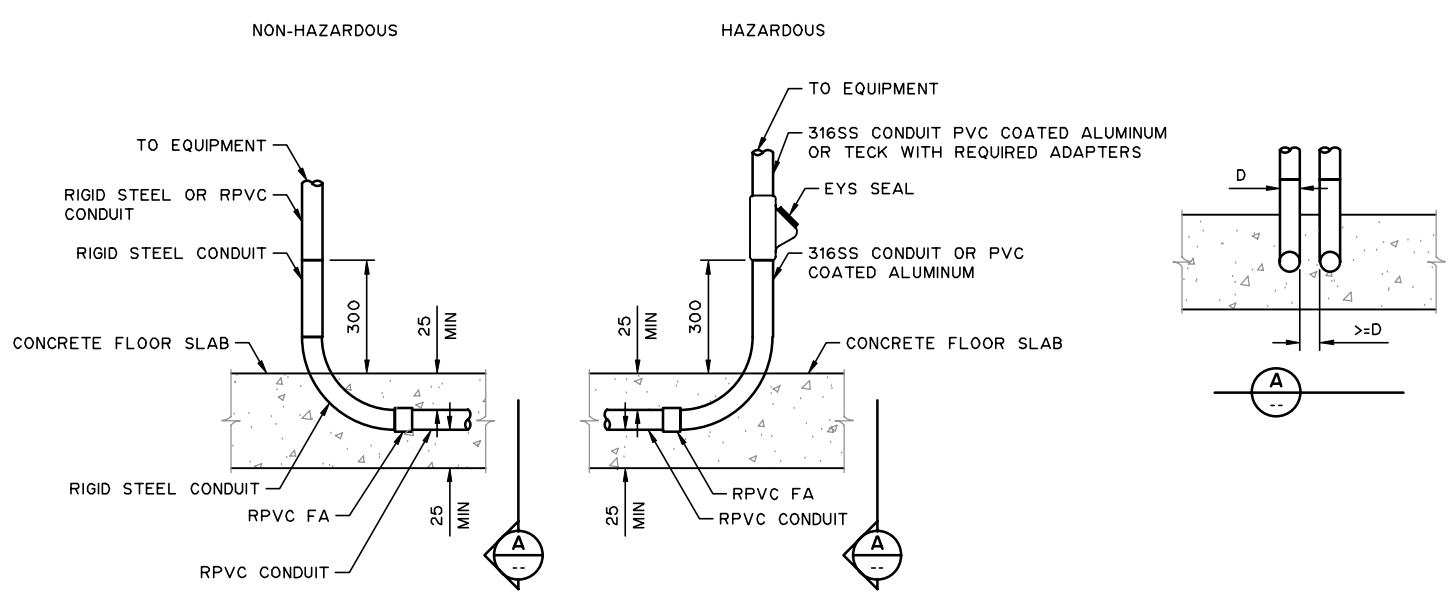

IN SLAB CONDUIT INSTALLATION FOR HAZARDOUS AND NON HAZARDOUS ZONES DETAIL

24 E1.1 / 24 E1.2

NOTES:

1. FOR INFORMATION REGARDING GENERAL NOTES, UTILITIES, ABBREVIATIONS AND SYMBOLS, REFER TO THE LEGEND DRAWINGS.

THIS DRAWING MAY HAVE BEEN MODIFIED FROM ITS ORIGINAL SIZE. ALL SCALE NOTATIONS INDICATED ARE BASED ON 11"x17" FORMAT DRAWINGS

ISSUE	YY-MM-DD	REVISION
2	21-01-15	FOR CONSTRUCTION
1	20-10-15	FOR TENDER

Association of Professional Engineers & Geoscientists of Saskatchewan
CERTIFICATE OF AUTHORIZATION
MPE Engineering Ltd.
Number C1334
Permission to Consult held by:

Discipline	Sk. Reg. No.	Signature
ELECTRICAL	32675	

PROFESSIONAL ENGINEER
R.G. DESTIE
MEMBER 32675
2021-01-22
YR. MN. DAY
SASKATCHEWAN

MPE Engineering Ltd.

ENGLISH RIVER ENTERPRISES PROPERTY MANAGEMENT LP

WASTEWATER TREATMENT PLANT
ELECTRICAL
ELECTRICAL DETAILS

DESIGNED	R.G.O.	JOB	7603-002-00
DRAWN	T.S.	SCALE	N.T.S.
DATE	NOVEMBER 2020	DRAWING	E5.6

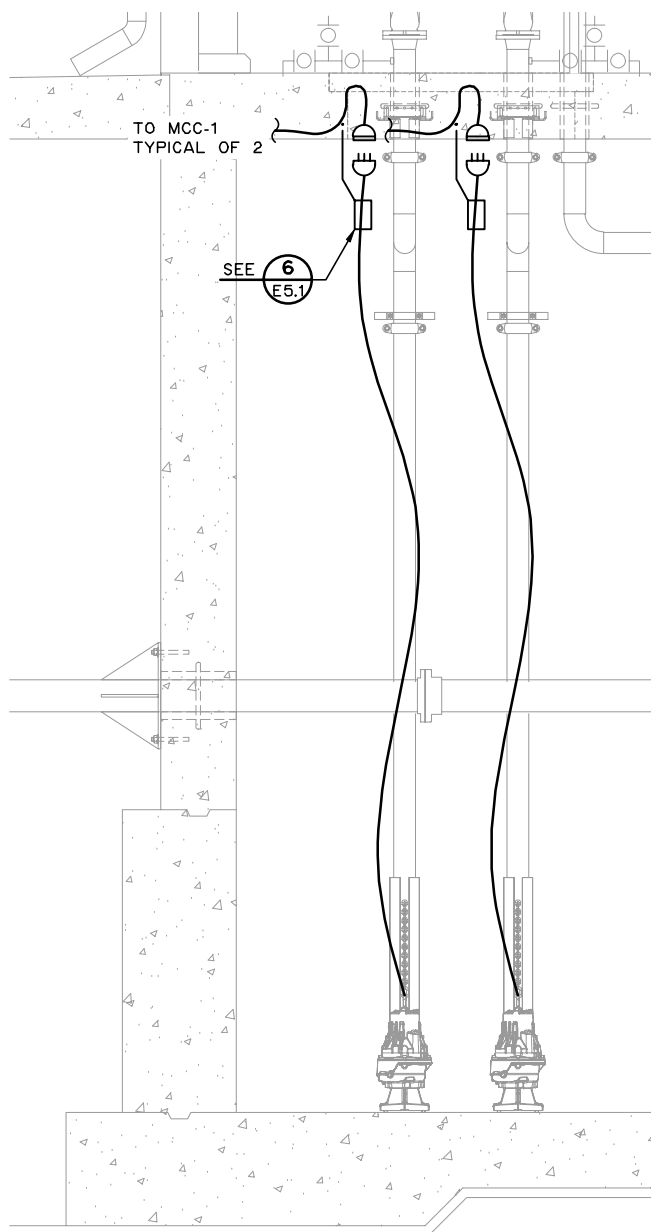

PUMPS DETAIL

25 E1.1

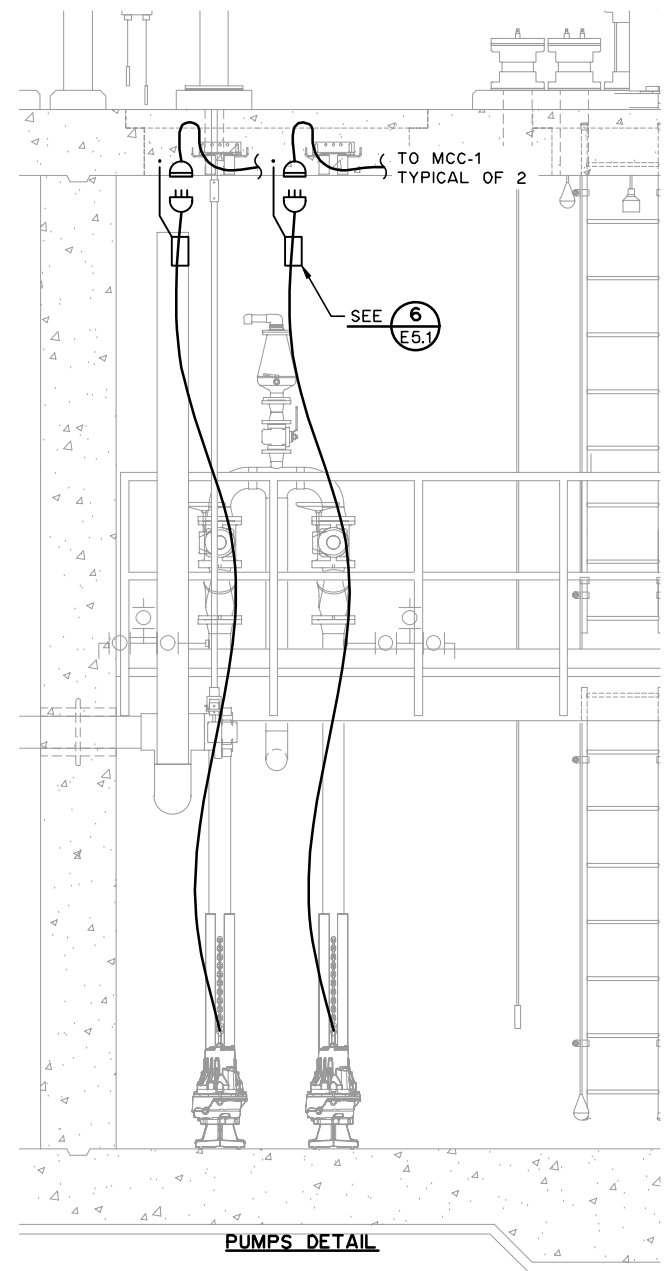

PUMPS DETAIL

26 E1.1

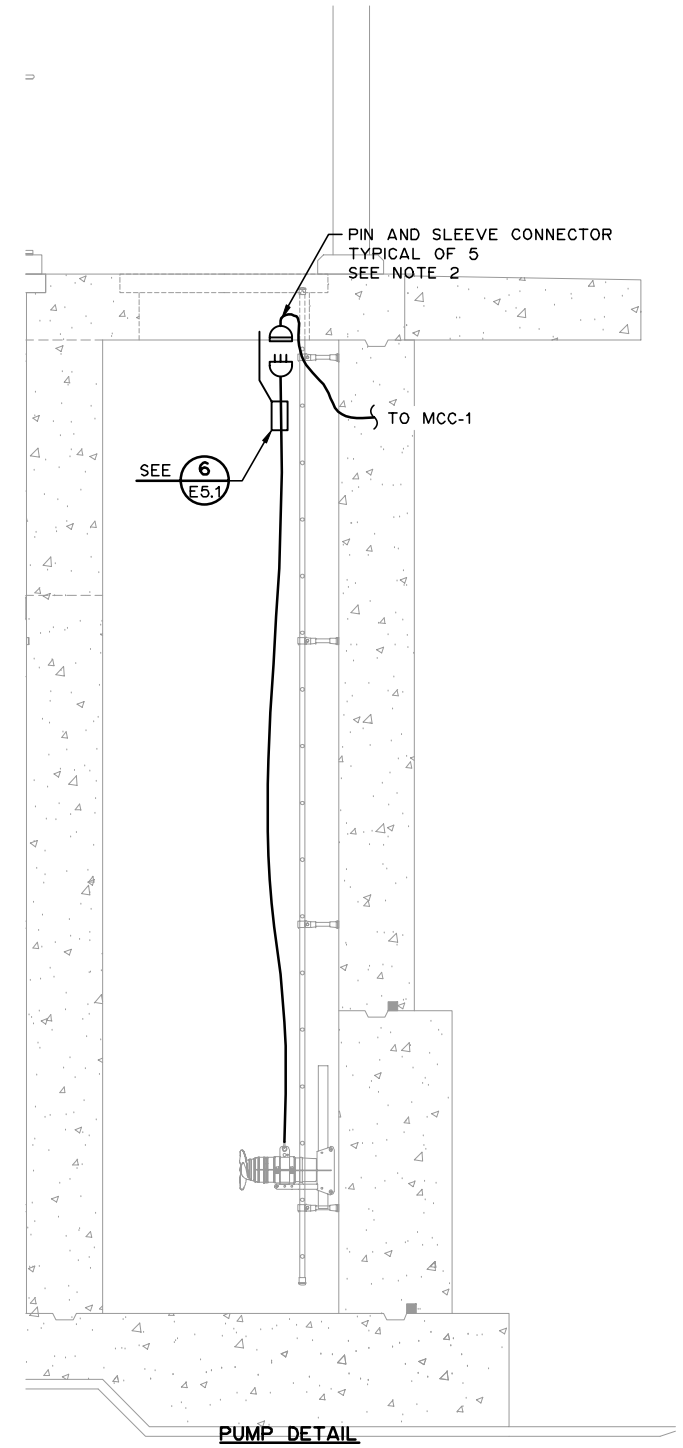

PUMP DETAIL

27 E1.1

NOTES:

1. FOR INFORMATION REGARDING GENERAL NOTES, UTILITIES, ABBREVIATIONS AND SYMBOLS, REFER TO THE LEGEND DRAWINGS.
2. MOUNT PIN AND SLEEVE RECEPTACLE SUCH THAT IT CAN BE ACCESSED WITHOUT ENTERING THE HATCH.

THIS DRAWING MAY HAVE BEEN MODIFIED FROM ITS ORIGINAL SIZE. ALL SCALE NOTATIONS INDICATED ARE BASED ON 11"x17" FORMAT DRAWINGS

ISSUE	YY-MM-DD	REVISION
2	21-01-15	FOR CONSTRUCTION
1	20-10-15	FOR TENDER

Association of Professional Engineers & Geoscientists of Saskatchewan
CERTIFICATE OF AUTHORIZATION
MPE Engineering Ltd.
Number C1334
Permission to Consult held by:

Discipline	Sk. Reg. No.	Signature
ELECTRICAL	32675	

PROFESSIONAL ENGINEER
R.G. OESTIE
MEMBER 32675
2021-01-22
YR. MN. DAY.
SASKATCHEWAN

MPE Engineering Ltd.

ENGLISH RIVER ENTERPRISES
PROPERTY MANAGEMENT LP

WASTEWATER TREATMENT PLANT
ELECTRICAL
ELECTRICAL DETAILS

DESIGNED	R.G.O.	JOB	7603-002-00
DRAWN	T.S.	SCALE	N.T.S.
DATE	NOVEMBER 2020	DRAWING	E5.7

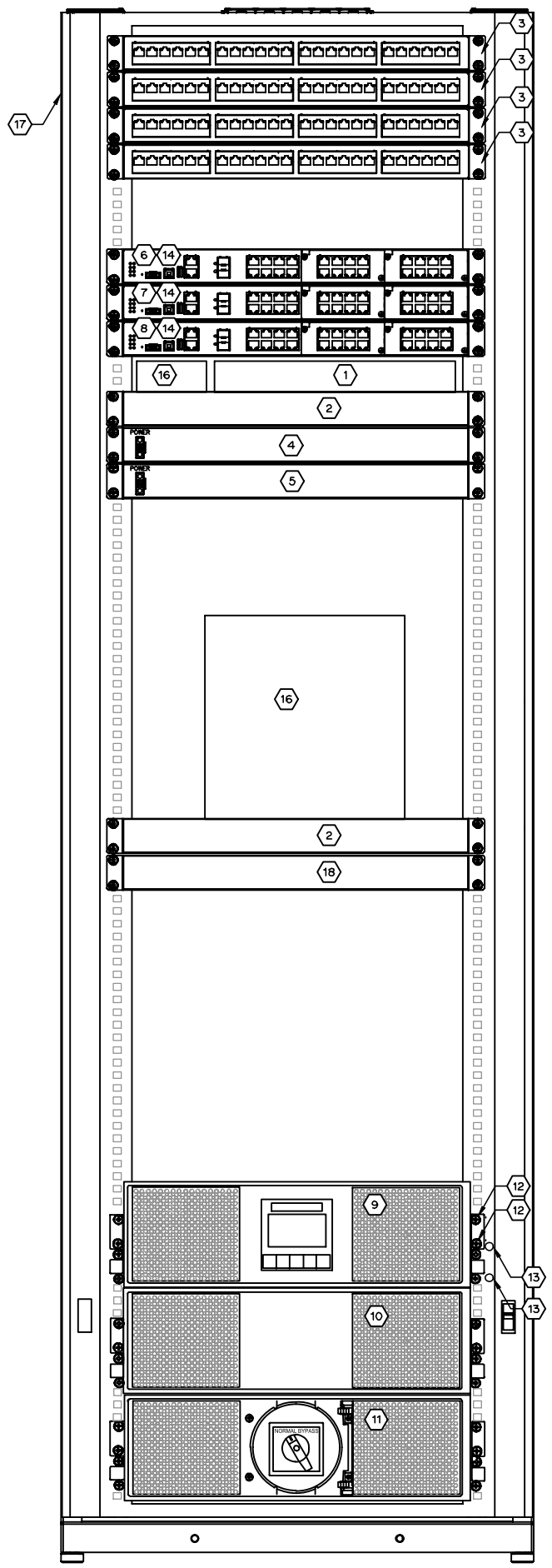

28
E1.7

KEY ITEMS:

1. CISCO MERAKI ROUTER, SUPPLIED BY OTHERS, CONTRACTOR TO INSTALL CONTRACTOR TO INSTALL
2. IU RACK MOUNTED SHELF
3. 24 PORT KEYSTONE TYPE RACK MOUNT PATCH PANEL C/W 24 CAT 6 KEYSTONES.
4. 1U, 10 RECEPTACLE, POWER DISTRIBUTION UNIT WITH INTEGRAL POWER CONDITIONER. RECEPTACLES ON REAR SIDE. PANEL A SOURCE.
5. 1U, 10 RECEPTACLE, POWER DISTRIBUTION UNIT WITH INTEGRAL POWER CONDITIONER. RECEPTACLES ON REAR SIDE. PANEL D SOURCE.
6. CONTROL NETWORK HEAD ROUTER
7. CONTROL NETWORK TAIL ROUTER
8. INTERNET ROUTER
9. UNINTERRUPTIBLE POWER SUPPLY (UPS)
10. EXTENDED BATTERY MODULE (EBM)
11. POWER DISTRIBUTION MODULE (PDM)
12. TWO M6X12 CABINET-MOUNTING BRACKET SCREWS TYPICAL
13. TWO M6X12 RAIL-MOUNTING SCREWS TYPICAL
14. TERMINATE PATCH CABLES FROM PATCH PANEL TO ROUTER AS PER COMMUNICATION ARCHITECTURE AND CABLE AND CONDUIT SCHEDULE.
15. NETWORK ATTACHED STORAGE DEVICE (NAS).
16. INTERNET SERVICE PROVIDER MODEM. SUPPLIED BY ISP. CONTRACTOR TO INSTALL AND TERMINATE PATCH CABLES INATE OATCH CABLES.

42U NETWORK RACK. CONTRACTOR TO SUPPLY ALL CABLE MANAGEMENT DEVICES AND MOUNTING HARDWARE REQUIRED FOR A COMPLETE, NEAT AND WORKMANLIKE INSTALLATION.

SEPTAGE RECEIVING STATION RACK MOUNTED SERVER. SUPPLIED BY SEPTAGE RECEIVING STATION VENDOR, INSTALLED BY CONTRACTOR.

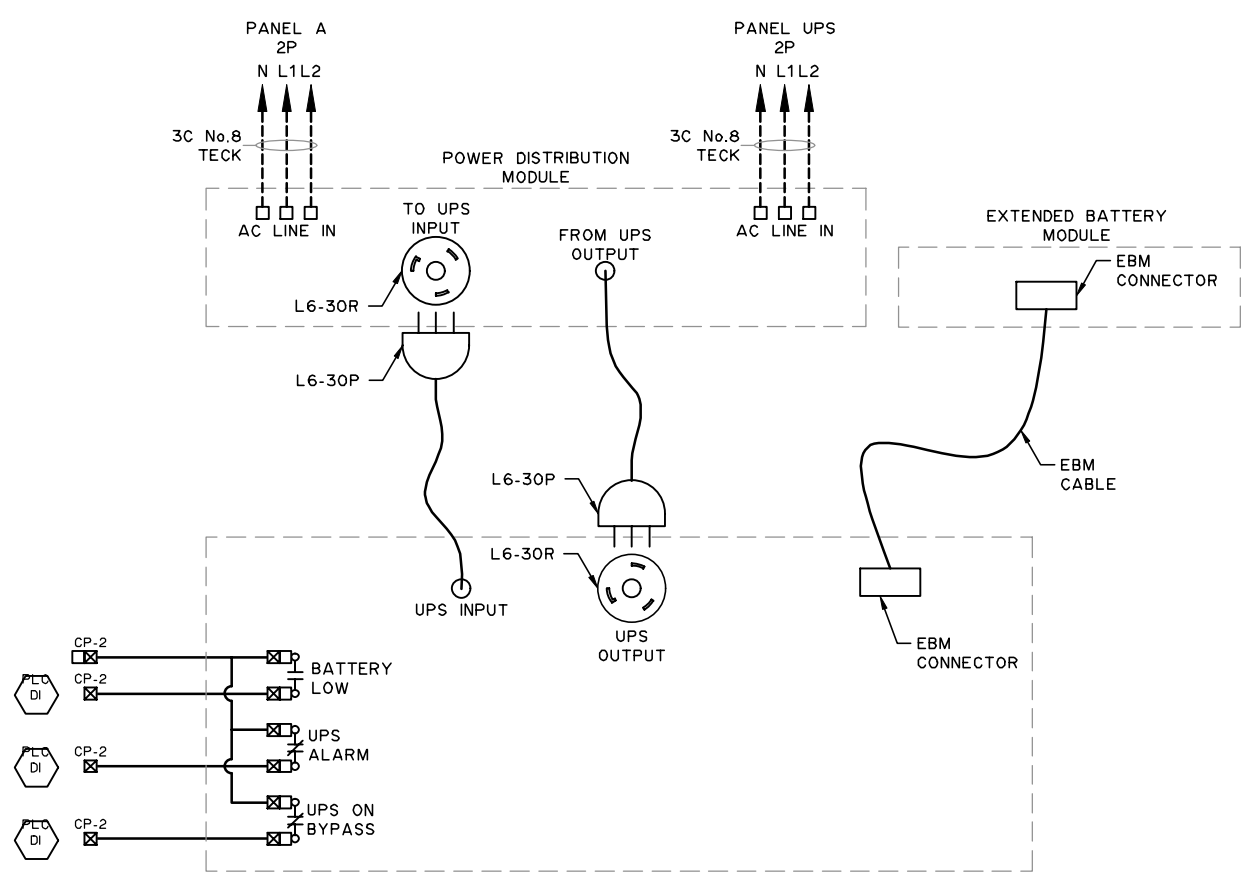

UPS AND PDM WIRING DIAGRAM

NOTES:

1. FOR INFORMATION REGARDING GENERAL NOTES, UTILITIES, ABBREVIATIONS AND SYMBOLS, REFER TO THE LEGEND DRAWINGS.

THIS DRAWING MAY HAVE BEEN MODIFIED FROM ITS ORIGINAL SIZE. ALL SCALE NOTATIONS INDICATED ARE BASED ON 11"x17" FORMAT DRAWINGS

ISSUE	YY-MM-DD	REVISION
2	21-01-15	FOR CONSTRUCTION
1	20-10-15	FOR TENDER

Association of Professional Engineers & Geoscientists of Saskatchewan
CERTIFICATE OF AUTHORIZATION
MPE Engineering Ltd.
Number C1334
Permission to Consult held by:

Discipline	Sk. Reg. No.	Signature
ELECTRICAL	32675	

PROFESSIONAL ENGINEER
R.G. OFSTIE
MEMBER 32675
2021-01-22
YR. MN. DAY.
SASKATCHEWAN

MPE Engineering Ltd.

ENGLISH RIVER ENTERPRISES
PROPERTY MANAGEMENT LP

WASTEWATER TREATMENT PLANT
ELECTRICAL
UPS PACK LAYOUT AND WIRING DETAILS

DESIGNED	R.G.O.	JOB	7603-002-00
DRAWN	T.S.	SCALE	N.T.S.
DATE	NOVEMBER 2020	DRAWING	E5.8

Stantec

Memo

To:	Kylie McLean, RPP, MCIP R.M. Corman Park	From:	Jeff Blyth, P.Eng. Stantec Consulting Ltd.
Project/File:	111000505	Date:	February 10, 2023

Reference: R.M. Corman Park – Wastewater Forcemain Feasibility Memo

1 Objective

As requested by the R.M. of Corman Park (Corman Park), Stantec completed a preliminary feasibility review of the projected wastewater design flows for the Edgemont East and Major Lands developments, and the construction of a sanitary forcemain to pump treated effluent from the Edgemont East development to the English River Wastewater Treatment Facility (treatment facility). Corman Park is in the preliminary stages of defining its wastewater collection strategy for the area south of Saskatoon and is considering an agreement with Des Nedhe Utilities Corporation (English River) to have English River treat sewage from developments within Corman Park. This feasibility memo is intended to support this discussion.

2 Background

As the largest rural municipality in Saskatchewan, Corman Park is experiencing an increased demand for development. A large portion of this development is focused directly south of Saskatoon between Highway 11 and the South Saskatchewan River. While the majority of the developments are serviced by a private water supply system, Corman Park does not have a municipal wastewater collection system to service these developments. The developments in this area use a septic tank with pumping services to haul the wastewater off site or a septic tank with a septic field for disposal. As density within this region increases, septic fields will no longer be a viable option.

Edgemont East is a proposed rural residential development consisting of single family detached homes along Grasswood Road approximately 2.0 km west of Highway 11. Edgemont East is proposing to be built in four phases with the timing of the phases currently unknown. Major Lands is a commercial development along Grasswood Road approximately 0.5 km west of Highway 11. The type of commercial development within Major Lands is proposed as medical clinics/offices. However, as per the P4G Official Community Plan, the area is zoned for Urban Commercial Industrial which includes office, retail, and industrial areas that are connected to urban servicing.

The English River treatment facility is directly west of Highway 11 on the Grasswood Reserve 192J south of Saskatoon. The treatment facility was constructed to service development on the English River First Nation Reserve and adjacent lands in Corman Park. The current capacity of the treatment facility is 276 m^3/day with potential to expand to 500 m^3/day. Future expansion to 1,000 m^3/day and 2,500 m^3/day have also been discussed but would require full replacement of the existing facility and a permanent discharge location.

MPE Engineering Ltd. (MPE) has been working with English River Property Management who manages the treatment facility. As part of their work, MPE has prepared a technical memorandum summarizing the effluent disposal strategy for the treatment facility. Based on the technical memorandum the treatment facility has a disposal capacity of 217 m³/day using a combination of evaporation and irrigation. Both disposal methods vary greatly with Saskatchewan's seasonal climates. Permanent disposal to the South Saskatchewan River and through Saskatoon's storm system have been discussed. However, neither option has been approved. Permanent disposal will be required prior to the treatment facility reaching its 276 m³/day capacity.

3 Design Assumptions

As this memo is intended as a preliminary feasibility, general design assumptions have been made to enable preliminary discussions between Corman Park and English River. These assumptions should be confirmed prior to the next stage of design.

3.1 Design Flows

An analysis was completed to confirm the projected wastewater designs flows for the Edgemont East and Major Lands developments.

3.1.1 EDGEMONT EAST

The analysis for the Edgemont East development uses City of Saskatoon design standards for dry weather flows to calculate wastewater generation rates. Population densities have been adjusted to account for the rural nature of development within Corman Park. Refer to Table 3-1 for projected average dry weather wastewater design flows.

Table 3-1: Edgemont East Projected Dry Weather Wastewater Design Flow

Land Use Category	Units	Population/Unit	Population	Average Dry Weather Flow (L/c/d)	Average Wastewater Flow (m³/d)
Edgemont East Ph1	40	3.3	132	290	38.3
Edgemont East Ph2	41	3.3	136	290	39.4
Edgemont East Ph3	32	3.3	106	290	30.7
Edgemont East Ph4	18	3.3	60	290	17.4
Total	131	3.3	434	290	**125.8**
Treatment Facility (Current Capacity)	288	3.3	951	290	**276.0**
Treatment Facility (Maximum Capacity)	522	3.3	1,723	290	**500.0**

Based on Table 3-1, the total projected dry weather wastewater flow from Edgemont East is approximately 125.8 m³/d. It is recommended that a minimum 15% contingency be added to this number to account for potential variance in development and inflow and infiltration (I&I) into the wastewater collection system. Exact values for I&I will be site specific and will be dependent on several factors including, but not limited to, alignment of the wastewater collection system, subsurface soil conditions, construction materials and specifications, and operations and maintenance practices.

In addition to the above, based on the current and maximum capacity of the treatment facility and not including contingency for any variance or I&I, Corman Park could service approximately 288 and 522 single family homes, respectively. Alternatively, this is represented as an average dry weather flow rate of 0.96 m³/d per single family home.

3.1.2 MAJOR LANDS

The analysis for the Major Lands development uses City of Saskatoon design standards for population densities and dry weather flows to calculate wastewater generation rates. I&I have not been included. Refer to Table 3-2 for projected average dry weather wastewater design flows.

Table 3-2: Major Lands Projected Dry Weather Wastewater Design Flow

Land Use Category	Area (ha)	Population/hectare (ppl/ha)	Average Dry Weather Flow (L/c/d)	Average Wastewater Flow (m³/d)
Local Commercial / Dry Industrial	13.19	160	290	**612.0**
Mixed Industrial	13.19	130	290	**497.3**
Medical Clinics/Offices*	13.19	-	-	**20.0**
Treatment Facility (Current Capacity)	5.95-7.32	130-160	290	**276.0**
Treatment Facility (Maximum Capacity)	10.77-13.26	130-160	290	**500.0**

**Average wastewater flow for the medical clinic/office land use category provided by Corman Park through discussion with the developer.*

Based on the above, the total projected dry weather wastewater flow from Major Lands assuming local commercial development is 612.0 m³/d. This exceeds the current and maximum capacity of the treatment facility. To meet the current and maximum capacity of the treatment facility using mixed industrial or local commercial / dry industrial development you would be restricted to an area of 5.95 ha to 7.32 ha and 10.77 ha to 13.26 ha, respectively.

As identified above, it is recommended that a minimum 15% contingency be added to the average wastewater flow rate to account for potential variance in development and I&I into the wastewater collection system.

3.2 Edgemont East Forcemain and Lift Station Design

The below preliminary feasibility review of the Edgemont East forcemain and lift station design is based on the information from 3.1.1 and assumes all wastewater collection within Edgemont East will be completed by the developer and provided to a single location for transport to the treatment facility.

3.2.1 ROUTING

The proposed sanitary forcemain will be routed along Grasswood Road to Range Road 3051 and then north to the treatment facility. The sanitary forcemain would connect to a lift station in the northeast quadrant of the Grasswood Road and Range Road 3052 intersection and extend east approximately 1.3 km under the CN Railway to Range Road 3051 and then go north along Range Road 3051 for approximately 1.2 km to the treatment facility. A trenchless crossing will be required through the CN Railway right-of-way. Refer to Figure 1 for the proposed routing.

3.2.2 SIZING AND PIPE MATERIAL

A 250 mm forcemain would provide ample capacity for Edgemont East along with potential for other developments to tie-in. If the forcemain is intended to only service Edgemont East, the forcemain size can be reduced. Pipe material is assumed to be HDPE as it is commonly used for similar applications in the Saskatoon region.

3.2.3 LIFT STATION, AIR VALVES, AND TIE-IN TO TREATMENT FACILITY

Due to the high-level nature of this review, general assumptions were made to allow for costing of the lift station, air valves, and the tie-in to the treatment facility.

- A duplex lift station package will be constructed on the northeast quadrant of the Grasswood Road and Range Road 3052 intersection. The pumps will be designed to meet WSA design requirements. The lift station will not include a cover building.
- There will be a minimum of 1 air valve required along the route. The air valve will be placed in-line. A manhole chamber is not required for the air valve.
- The forcemain will tie-in to an existing manhole located outside of the treatment facility. The existing manhole and sanitary sewer will not require upsizing to accommodate the wastewater flows from Edgemont East.

Reference: 111000505

4 Opinion of Probable Construction Cost

A Class 5 Opinion of Probable Cost (OPC) was prepared for the sanitary forcemain and lift station based on the assumptions outlined above. The Class 5 OPC is based on ASTM E 2516-06 and provides a level of accuracy of +50% to -30%. The OPC is based on 2022 dollars and does not include annual operation costs or land purchasing costs as these were not available at the time this memo was completed. Annual operation costs and land purchasing costs should be considered prior to proceeding with the next phase of design. Refer to Table 4-1 below for costing information.

Table 4-1: Edgemont East Forcemain and Lift Station OPC

Item No.	Item of Work	Cost
1	250 mm Forcemain (Open Trench)	1,250,000
2	250 mm Forcemain (Trenchless Install)	58,000
3	Lift Station	500,000
4	Air Valves	50,000
5	Treatment Facility Tie-In	25,000
	Construction Subtotal	1,883,000
	Engineering and Construction Administration (15%)	282,000
	Contingency (20%)	376,000
	Total (ex. GST & PST)	2,541,000

Best regards,

STANTEC CONSULTING LTD.

Jeff Blyth P.Eng.
Associate, Civil Engineer
Phone: 306-201-9368
Jeff.Blyth@stantec.com

Attachment: Figure 1 – Edgemont East Proposed Forcemain Routing

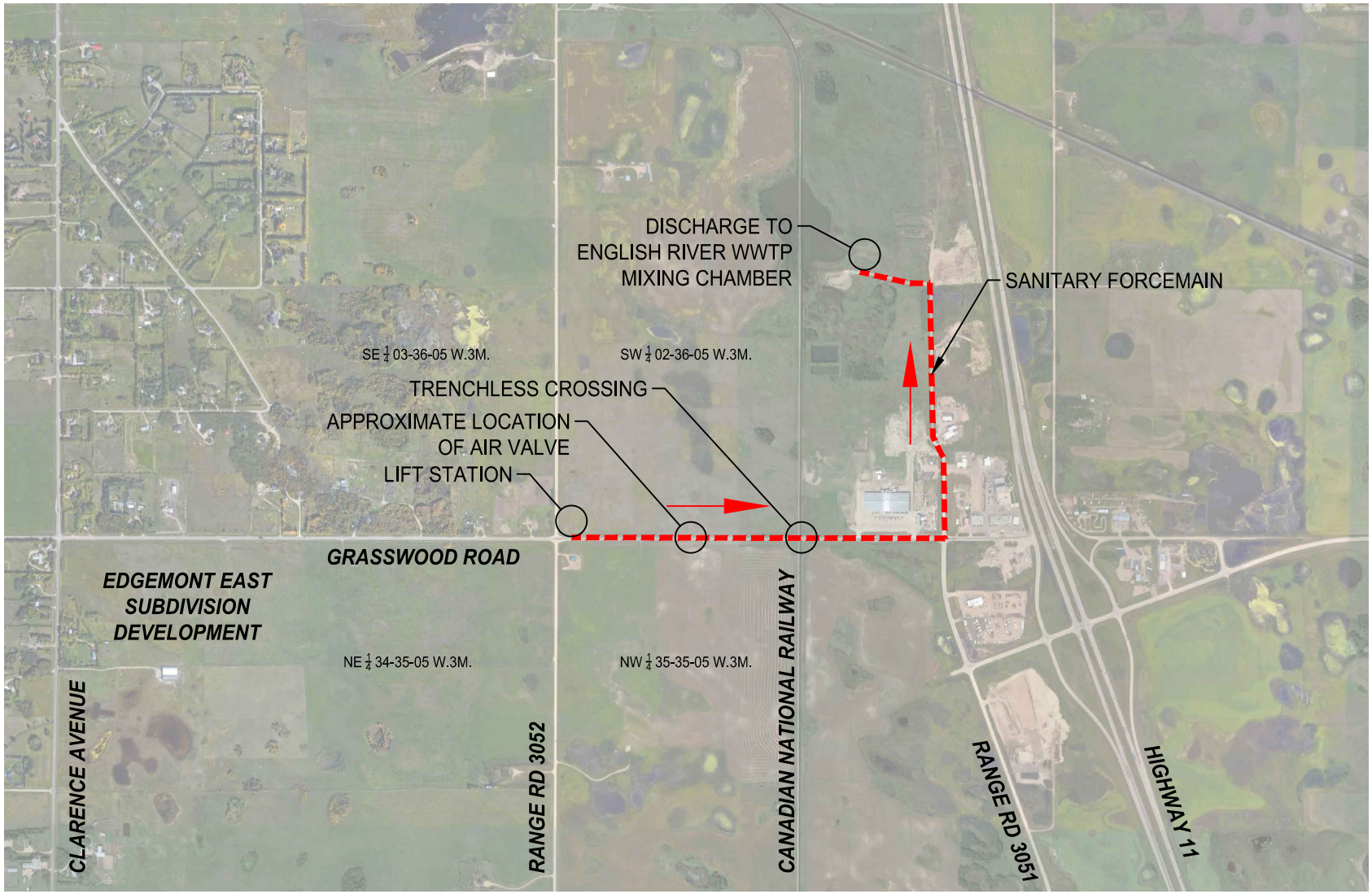

Stantec

Stantec Consulting Ltd.
400 – 1820 Hamilton Street
Regina SK S4P 2B8
Tel: (306) 781-6400
www.stantec.com

Notes

SANITARY FORCEMAIN

FLOW DIRECTION

Client/Project

RM OF CORMAN PARK

GRASSWOOD ROAD
FORCEMAIN
FEASIBILITY REVIEW

Project No.
111000505

Title

EDGEMONT EAST
PROPOSED FORCEMAIN
ROUTE

Revision	Date
-	2022.11.21
Reference Sheet	Figure No.
-	1

u:\111000505\drawings\00505c_fm

2022.11.23 2:47:27 PM

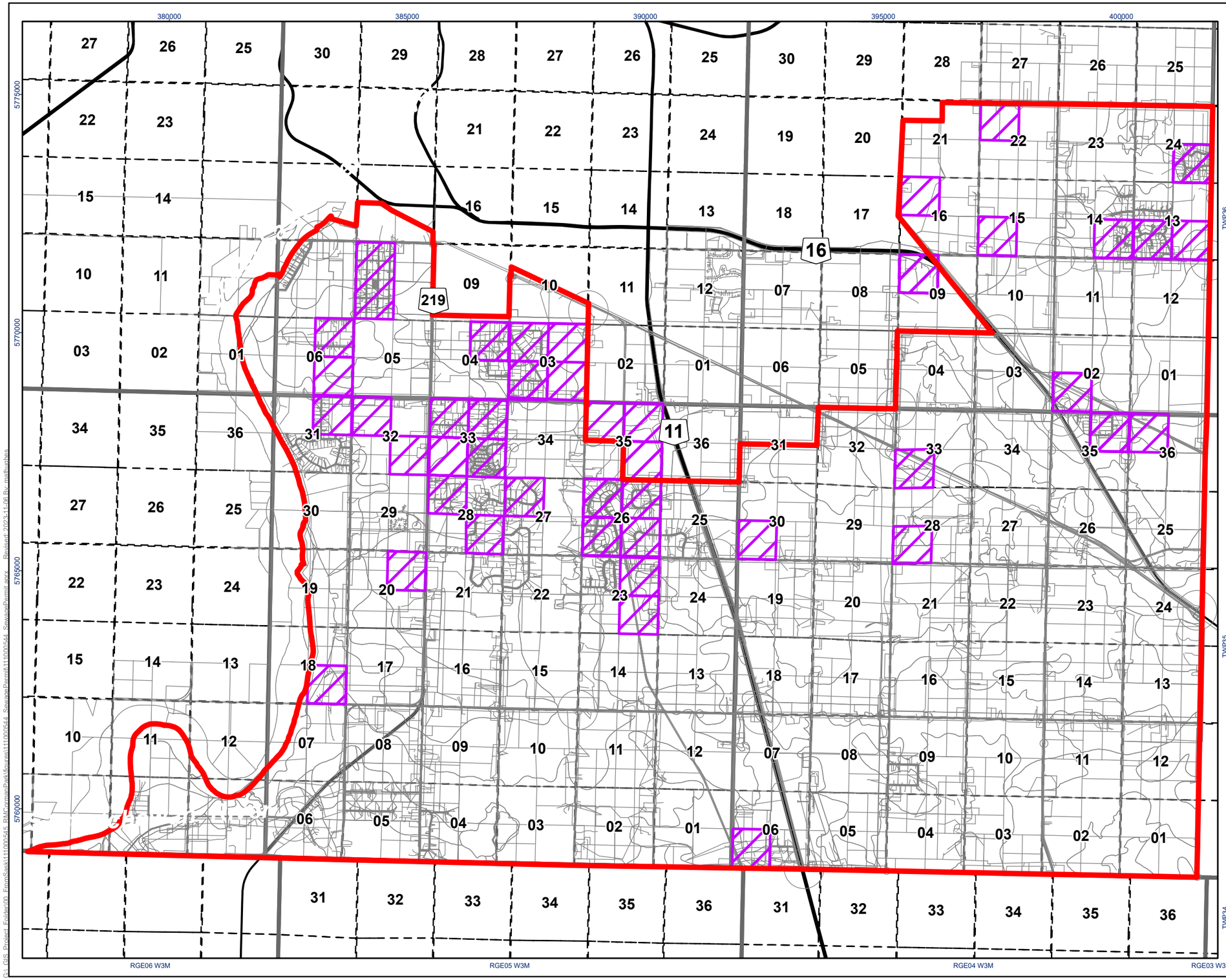

Stantec

Legend

- Study Area
- Land Sections Containing SHA Sewage Permits (July 2012 - June 2023)
- Surface Parcels
- Township
- Section
- Major Roads

N

0 1 2 Kilometers

(At original document size of 11x17)
1:81,000

Notes

1. Coordinate System: NAD 1983 UTM Zone 13N
2. Data Sources: Base features produced under license with the Government of Saskatchewan and the Government of Canada.
3. Background Orthoimagery: Canada Base Map – Transportation Service: .
4. SHA electronically documented wastewater permit data outlined in Appendix A.3 of the RM of Corman Park – Phase 1 – Background Report

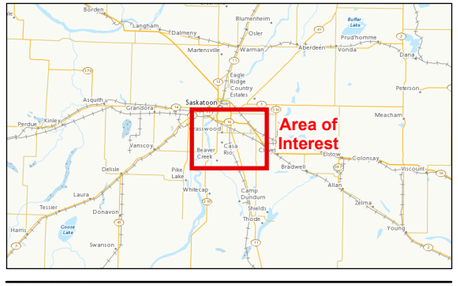

Project Location
RM of Corman Park,
Saskatchewan

Prepared by MH on 2023-11-06
TR by ER on 2023-11-06

Client/Project
111000544-001 REVB

RM of Corman Park
South RM Area Development Plan

Figure No.
A3.1

Title
Existing SHA Sewage Permit Locations

Disclaimer: This document has been prepared based on information provided by others as cited in the Notes section. Stantec has not verified the accuracy and/or completeness of this information and shall not be responsible for any errors or omissions which may be incorporated herein as a result. Stantec assumes no responsibility for data supplied in electronic format, and the recipient accepts full responsibility for verifying the accuracy and completeness of the data.

G:\GIS_Project_Folder\00_FromSask\111000544_RMCormanPark\Figures\111000544_SewagePermit11100054_SewagePermit_2023-11-06_Revised_mathughes

Saskatchewan Health Authority - Study Area Sewage Permit Data

Legal Description / RTM	cWellsQuar	cWellsSect	cWellsTown	cWellsRang	cWellsMeri	cLandLocat
SW 6-35-4 W3M	SW	06	35	04	3	SW-06-35-04-3
SW 28-35-4 W3M	SW	28	35	04	3	SW-28-35-04-3
SW 30-35-4-W3M	SW	30	35	04	3	SW-30-35-04-3
RM 344 SW 33-35-4 W3D	SW	33	35	04	3	SW-33-35-04-3
NE 35-35-4-W3M Lot 2 Plan 10207000	NE	35	35	04	3	NE-35-35-04-3
NE 35-35-4-W3M Lot 2 Blk 1 Plan 10207000	NE	35	35	04	3	NE-35-35-04-3
NE 35-35-4 W3M	NE	35	35	04	3	NE-35-35-04-3
NW 36-35-4 W3M Plan 90532555A	NW	36	35	04	3	NW-36-35-04-3
SE 18-35-5 W3M	SE	18	35	05	3	SE-18-35-05-3
Parcel C Plan 102015290 NE 20-35-5 W3M	NE	20	35	05	3	NE-20-35-05-3
SE 23-35-5 W3M	SE	23	35	05	3	SE-23-35-05-3
NE 23-35-5 W3M	NE	23	35	05	3	NE-23-35-05-3
NE 26-35-5 W3M Lot 5 Blk 1 Plan 9554430 65 Ashwood Estates	NE	26	35	05	3	NE-26-35-05-3
NW 26-35-5 W3M	NW	26	35	05	3	NW-26-35-05-3
NW 26-35-5 W3M lot 19 Plan 102131727	NW	26	35	05	3	NW-26-35-05-3
NE 26-35-5 W3M	NE	26	35	05	3	NE-26-35-05-3
NE 26-35-5 W2M	SW	26	35	05	3	SW-26-35-05-3
Lot 2 SW 26-35-5 W3M	SW	26	35	05	3	SW-26-35-05-3
NW 26-35-5 W3M lot 61	NW	26	35	05	3	NW-26-35-05-3
RM 344, Grasswood Estates, NW-26-35-5-W3M, Plan 102131727	NW	26	35	05	3	NW-26-35-05-3
RM 344, Grasswood Estates, SW-26-35-5-W3M	SW	26	35	05	3	SW-26-35-05-3
RM 344 26-35-5 W3rd 131 Grandview Trail Block 32 Plan 102002768 Grasswood Estates		26	35	05	3	-26-35-05-3
RM 344 26-35-5 W3rd; Blk 44 Grasswood Estates		26	35	05	3	-26-35-05-3
RM 344, Lot-54, Blk-54, Plan- 102292095, W-26-35-5-W3M, Grasswood Estates	W	26	35	05	3	W-26-35-05-3
RM 344 NW 27-35-5 W3rd; Casa Rio Lot 6 Blk 2 Plan 102225349	NW	27	35	05	3	NW-27-35-05-3
NW 28-35-5 W3M Lot 2 Blk 1 98MW15103 Ext 7	NW	28	35	05	3	NW-28-35-05-3
RM 344; Casa Rio Estates Blk DiQ, Plan 94S44536 Ext 0; SE 28-35-5 W3rd	SE	28	35	05	3	SE-28-35-05-3
NE 31-35-5-W3M Lot 1 Blk 1 Plan 73S24564	NE	31	35	05	3	NE-31-35-05-3
RM 344 NW-32-35-5 W3rd, Corman Park	NW	32	35	05	3	NW-32-35-05-3
RM 344 - Riverside Estates; Lot 5; Blk 5; Plan 72S03954; SE 32- 35-5 W3M	SE	32	35	05	3	SE-32-35-05-3
NW 1/4 33-35-5 W3M	NW	33	35	05	3	NW-33-35-05-3
RM 344 - Edgemont Park Estate Block 34 Plan 102322886 - SE-33-35-5 W3M	SE	33	35	05	3	SE-33-35-05-3
RM 344 Plan FM 4061, NE- 33-35-5-W3rd	NE	33	35	05	3	NE-33-35-05-3
RM 344 SE-33-35-5-W3rd, #86 Edgemont Estates		33	35	05	3	-33-35-05-3
RM 344 Lot 51, Blk 203868669, Plan102359886, SW-33-35-5-W3M	SW	33	35	05	3	SW-33-35-05-3
RM 344 Lot 79, Blk 79, Plan 102359886, SW-33-35-5-W3M	SW	33	35	05	3	SW-33-35-05-3
RM 344, Block- 1, Plan- 60504750, NE-33-35-5-W3M	NE	33	35	05	3	NE-33-35-05-3
RM 344 - NE 33-35-5 W3M	NE	33	35	05	3	NE-33-35-05-3
NE 35-35-5 W3M Lot C Plan 101889704	NE	35	35	05	3	NE-35-35-05-3
RM 344 NW 35-5-W3M	NW	35	35	05	3	NW-35-35-05-3
RM 344 Parcel 4 Blk A Plan 101564647 SE-1/4 33 35-5-W3rd Edgemont Park Estates	SE	35	35	05	3	SE-35-35-05-3
RM 344 Lot-2, Blk-6, Plan- 73524564, SE-31-35-5-W3M, Riverside	SE	35	35	05	3	SE-35-35-05-3
SW 2-36-4 W3M Pcl A	SW	02	36	04	3	SW-02-36-04-3
RM 344 SW 2-36-4 W3rd	SW	02	36	04	3	SW-02-36-04-3
NW 9-36-4 W3M	NW	09	36	04	3	NW-09-36-04-3
NW 9-36-4 W3M	NW	09	36	04	3	NW-09-36-04-3
NW 9-36-4 W3M	NW	09	36	04	3	NW-09-36-04-3
Lot A Plan 82S04857 ext 1 NW 9-36-4 W3M	NW	09	36	04	3	NW-09-36-04-3
Lot 20 Plan 9ZS16334 SW 13-36-4 W3M	SW	13	36	04	3	SW-13-36-04-3
SE 13-36-4 W3M Lot 19 Blk 2 Plan 102129915	SE	13	36	04	3	SE-13-36-04-3
RM 344 - Applewood Estates; Lot 11; Blk 2 SW; Plan 102129915; SW 13-36-4 W3M	SW	13	36	04	3	SW-13-36-04-3
RM 344 SE 14-36-4 W3rd, #20 Meadow Ridge; Lot 20 Blk 2 Plan 102297810	SE	14	36	04	3	SE-14-36-04-3
SW 15-36-4 W3M	SW	15	36	04	3	SW-15-36-04-3
NW 16-36-4 W3M	NW	16	36	04	3	NW-16-36-04-3
NW 22-36-4 W3M Pcl 165260718	NW	22	36	04	3	NW-22-36-04-3
SE 24-36-4 W3M Plan 102065644 Ext O Pcl B	SE	24	36	04	3	SE-24-36-04-3
RM 344, #21 Tuscan Lane, Tuscan Ridge Estates, Lot 4, Block 1, Plan 102214000, SE 24-36-4 W3M	SE	24	36	04	3	SE-24-36-04-3
RM 344, Lot-3, Blk-1, Plan- 102214000, SE-24-36-4-W3M, Tuscan Ridge	SE	24	36	04	3	SE-24-36-04-3
SW 3-36-5 W3M Lot ZZ Plan 87S46148	SW	03	36	05	3	SW-03-36-05-3
SW 3-36-5-W3M Blk 20 Plan 102051302	SW	03	36	05	3	SW-03-36-05-3
RM 344 Lot 18, Plan 102051302, 1269 Grasswood Road,SW 1/4-03-36-5 W3rd, Corman Park	SW	03	36	05	3	SW-03-36-05-3
RM 344, Block- 119980907, NE-3-36-5-W3M	NE	03	36	05	3	NE-03-36-05-3
RM 344 - Grasswood North, Lot E, Blk 1, Plan 84538126, 3-36-5-3		03	36	05	3	-03-36-05-3
Plan 100899175 NE 1/4 4-36-5 W3M	NE	04	36	05	3	NE-04-36-05-3
RM 344, Blk- 18, Plan 102064429, 728 Diana St, NE-4-36-5-W3M, Grass Wood	NE	04	36	05	3	NE-04-36-05-3
NE 6-36-5 W3M Lot 2 Plan 68515109	NE	06	36	05	3	NE-06-36-05-3
RM 344, SE-6-36-5-W3M	SE	06	36	05	3	SE-06-36-05-3
Lot 1 Blk 1 W1/2 Sec 8-36-5 W3M	W	08	36	05	3	W-08-36-05-3

Appendix A.4

Figures for 4.0 Drainage

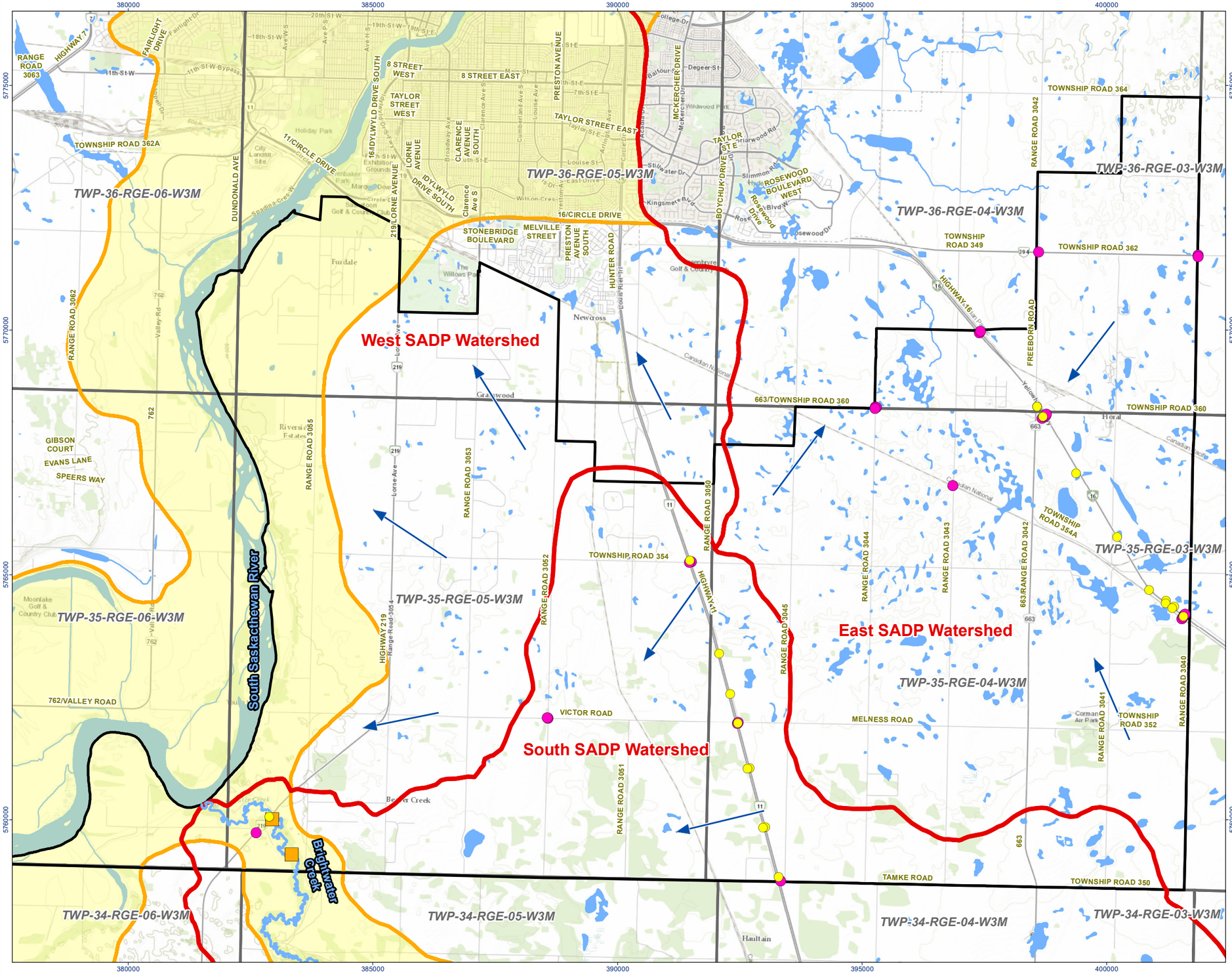

Stantec

Legend

- Culvert (Saskatchewan Ministry of Highways)
- Culvert (Stantec Survey)
- Bridge
- Watercourse
- Waterbody
- Surface Water Flow Direction
- Gross Drainage Area Boundary
- Non-Effective Drainage Area
- Effective Drainage Area
- Study Area
- Township / Range

N

0 1 2 Kilometers
(At original document size of 11x17)
1:80,000

Notes
1. Coordinate System: NAD 1983 UTM Zone 13N
2. Data Sources: Base features produced under license with the Government of Saskatchewan and the Government of Canada.
3. Background Orthoimagery: Sources: Esri, HERE, Garmin, Intermap, increment P Corp., GEBCO, USGS, FAO, NPS, NRCAN, GeoBase, IGN, Kadaster NL, Ordnance Survey, Esri

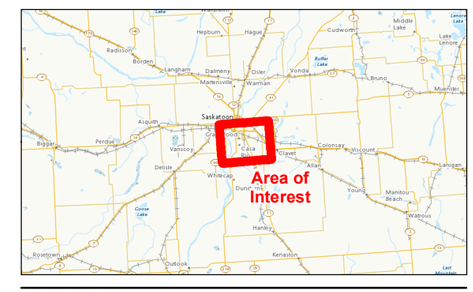

Project Location
RM of Corman Park,
Saskatchewan

Prepared by ADC on 2023-07-10
TR by SS on 2023-07-10
IR Review by XX on 2023-07-10

Client/Project
111000545-001 REVA

RM of Corman Park

Figure No.
A.4.1

Title
SADP Drainage Features

G:_GIS_Project_Folder\00_FromSask\111000545_RMCormanPark\admin\data_in\20230628_watershed\Figure5-1_DrainageFeatures_SADP_20230710.mxd Revised: 2023-07-10 By: ACampigotto

Disclaimer: This document has been prepared based on information provided by others as cited in the Notes section. Stantec has not verified the accuracy and/or completeness of this information and shall not be responsible for any errors or omissions which may be incorporated herein as a result. Stantec assumes no responsibility for data supplied in electronic format, and the recipient accepts full responsibility for verifying the accuracy and completeness of the data.

The SADP drainage inventories is included as an Excel spreadsheet.

Appendix A.5

Technical Memo and Figures for 5.0 Natural Area Screening

RM of Corman Park- South Area Development Plan Natural Area Screening

November 28, 2023

Prepared for:
R.M. of Corman Park
cc. Kylie Stumborg, Senior Planner
111 Pinehouse Drive
Saskatoon, S7K 5W1

Prepared by:
Stantec Consulting Ltd.
100-75 24th Street East
Saskatoon, SK S7K 0K3

Project Number:
111000544

Limitations and Sign-off

This document entitled RM of Corman Park- South Area Development Plan Natural Area Screening was prepared by Stantec Consulting Ltd. (“Stantec”) for the account of the RM of Corman Park (the “Client”). Any reliance on this document by any third party is strictly prohibited. The material in it reflects Stantec’s professional judgment in light of the scope, schedule and other limitations stated in the document and in the contract between Stantec and the Client. The opinions in the document are based on conditions and information existing at the time the document was published and do not take into account any subsequent changes. In preparing the document, Stantec did not verify information supplied to it by others. Any use which a third party makes of this document is the responsibility of such third party. Such third party agrees that Stantec shall not be responsible for costs or damages of any kind, if any, suffered by it or any other third party as a result of decisions made or actions taken based on this document.

Table of Contents

Limitations and Sign-off i

Acronyms / Abbreviations iv

1 Introduction 1
1.1 Project Scope 1

2 Biophysical Considerations 3
2.1 Methods 3
2.1.1 Wetlands 3
2.1.2 Land Cover Composition 4
2.1.3 Species of Conservation Concern 5
2.1.4 Special Land Designations 5
2.1.5 Sensitive Environmental Features 6
2.2 Results 6
2.2.1 Wetlands 6
2.2.2 Land Cover Composition 8
2.2.3 Species of Conservation Concern 10
2.2.4 Special Land Designations 15
2.2.5 Sensitive Environmental Features 16

3 Heritage Resources 17
3.1 Methods 17
3.2 Results 17

4 Discussion and Recommendations 26
4.1 Biophysical Considerations 26
4.2 Heritage Resources 28

5 References 30

List of Tables

Table 2.1 Wetland Classification Definitions 3
Table 2.2 Land Cover Classification Definitions 4
Table 2.3 Wetlands within the Study Area 6
Table 2.4 Land Cover Composition within the Study Area 8
Table 2.5 Historical Plant SOCC Records within 1 km of the Study Area 10
Table 2.6 Historical Wildlife SOCC Records within 1 km of the Study Area 13
Table 2.7 Historical Fish SOCC Records within the 1 km of the Study Area 15
Table 2.8 Special Land Designations within the Study Area 15
Table 3.1 Archaeological Site Types in the Study Area 24
Table 3.2 Previously Recorded Archaeological Sites in the Study Area 24
Table 4.1 Potential Biophysical Survey Requirements 27

List of Figures

Figure 1 Site Location 2
Figure 2 Wetlands in the Study Area 7
Figure 3 Landcover 9
Figure 4 Biophysical Considerations 12
Figure 5 Heritage Sensitivity Map Atlas 18

List of Appendices

Appendix A Project Screening Report

Appendix B Expected Plant SOCC within the Moose Wood Sandhills Landscape Area

Appendix C Expected Plant SOCC within the Elstow Plain Landscape Area

Appendix D Expected Plant SOCC within the Minichinas Upland Landscape Area

Appendix E Expected Wildlife SOCC

Appendix F Heritage Sensitivity Screening Report

Acronyms / Abbreviations

AAFC	Agriculture and Agri-Food Canada
AHPP	Aquatic Habitat Protection Permit
COSEWIC	Committee on the Status of Endangered Wildlife in Canada
DFO	Fisheries and Oceans Canada
ENV	Ministry of Environment
GOC	Government of Canada
GOS	Government of Saskatchewan
ha	hectare
HABISask	Hunting, Angling, and Biodiversity Information of Saskatchewan
HCB	Heritage Conservation Branch
HRIA	Heritage Resource Impact Assessment
HRIA-M	Heritage Resource Impact Assessment-Mitigation
ISC	Indigenous Services Canada
km	kilometre
m	metre
MOA	Ministry of Agriculture
PCAN	Protected and Conserved Area Network
R.M.	Rural Municipality
SADP	South R.M Area Development Plan
SARA	Species at Risk Act
SKCDC	Saskatchewan Conservation Data Centre
SOCC	Species of Conservation Concern
Stantec	Stantec Consulting Ltd.
WHPA	Wildlife Habitat Protection Act
WSA	Water Security Agency

1 Introduction

Stantec Consulting Ltd. (Stantec) was retained by the Rural Municipality (R.M.) of Corman Park No. 344 to conduct a desktop natural area screening and heritage screening for the South R.M. Area Development Plan (SADP) located south of Saskatoon, Saskatchewan (Figure 1). The southeastern portion of the R.M. of Corman Park (Study Area) has experienced significant growth in the last few years. The R.M. of Corman Park is now considering subdividing larger parcels for development, specifically along the corridors of Highway 11 and 219.

The natural area screening was completed to evaluate the Study Area's wetlands, and biophysical features including land cover composition, species of conservation concern (SOCC) and special land designations to identify potential constraints that could require mitigations and/or additional surveys prior to future development. A heritage screening was also completed as per Section 63 of *The Heritage Property Act* (1979-80) to determine heritage sensitivities and archeological sites.

1.1 Project Scope

The scope of work is desktop-based and includes the following:

- Desktop wetland classification, including inventory and maps.
- High-level review and mapping of environmental features/ sensitivities, plant and wildlife species, and heritage review.
- Recommendations for mitigation and conservation measures and identify the need and timing for additional future studies, monitoring or other land management measures.

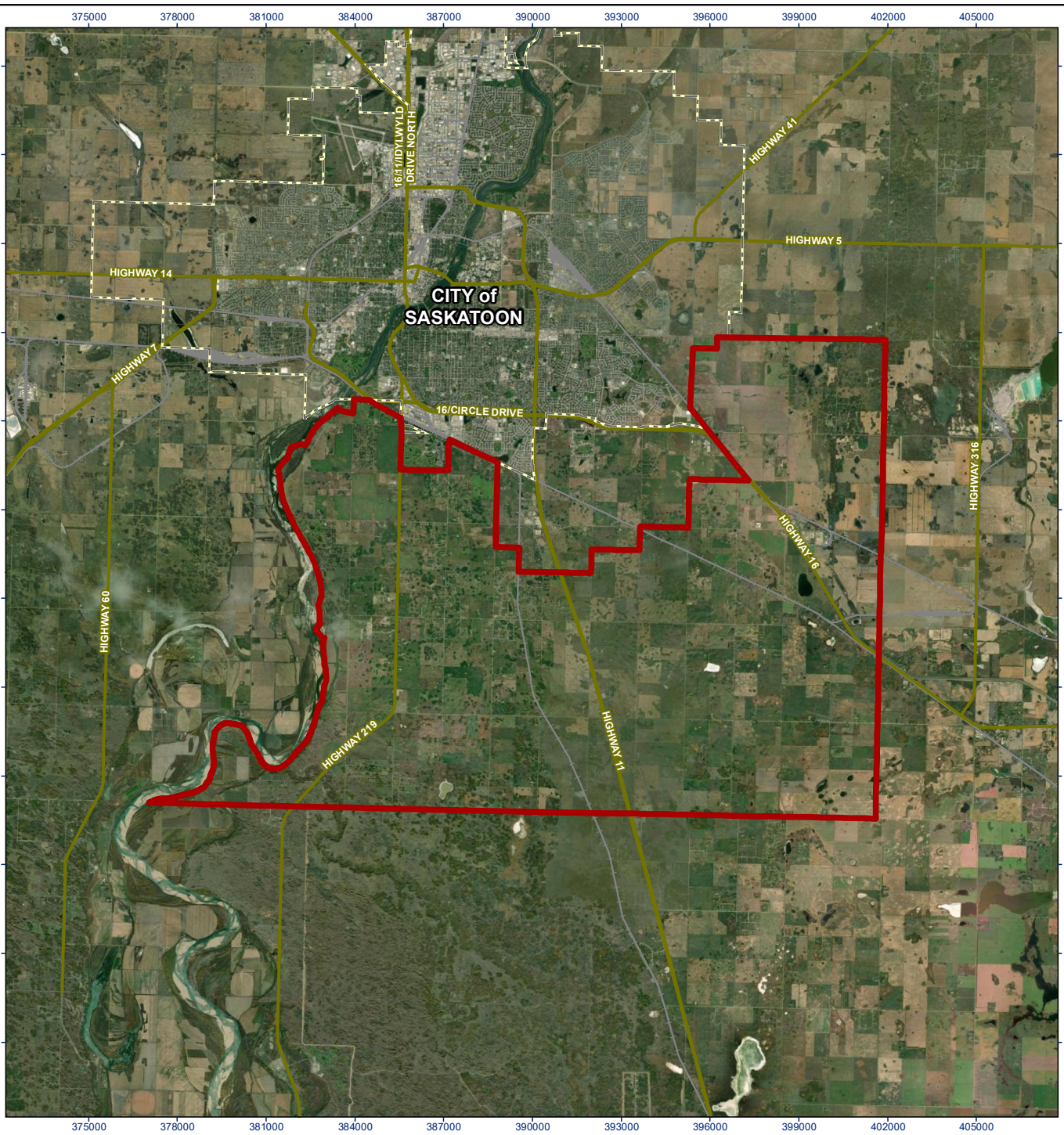

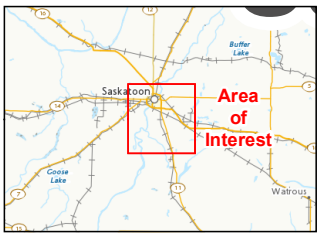

Legend

- Study Area
- City
- Major Road
- Railway

0 1 2 3 Kilometers

(At original document size of 8.5x11)
1:4,000,000

N

Stantec

Project Location	Prepared by JH on 2023-07-07
RM of Corman Park,	TR by NK on 2023-07-07
Saskatchewan	IR Review by WX on 2023-07-07
Client/Project	111000544-015 REVA

RM of Corman Park
South RM Area Development Plan

Figure No.

1

Title

Site Location

Notes

1. Coordinate System: NAD 1983 UTM Zone 13N
2. Data Sources: Base features produced under license with the Government of Saskatchewan and the Government of Canada.
3. Background: Source: Esri, Maxar, Earthstar Geographics, and the GIS User Community

G:_GIS_Project_Folder\00_FromSask\111000545_RMCormanPark\figures\111000544-015_REVA_SiteLocation.mxd Revised: 2023-07-07 By: JHiebert

Disclaimer: This document has been prepared based on information provided by others as cited in the Notes section. Stantec has not verified the accuracy and/or completeness of this information and shall not be responsible for any errors or omissions which may be incorporated herein as a result. Stantec assumes no responsibility for data supplied in electronic format, and the recipient accepts full responsibility for verifying the accuracy and completeness of the data.

2 Biophysical Considerations

2.1 Methods

2.1.1 Wetlands

As part of the land cover assessment, desktop wetland mapping and classification was completed for the proposed Study Area following the Classification of Natural Ponds and Lakes in the Glaciated Prairie Region (Stewart and Kantrud 1971). A series of historical air photographs and current imagery was reviewed to determine preliminary wetland boundaries and class. Class was determined using the zone representing the deepest and most permanent water and occupying greater than 25% of the total mapped wetland area (Table 2.1). Desktop mapping was conducted at a scale of 1:2,500 with a minimum polygon size of 0.04 hectares (ha; i.e., 20 metres (m) x 20 m). Wetlands classed II to VI were mapped in the Study Area. No ephemeral wetlands were mapped in the Study Area.

Desktop mapping of wetland extent and class was completed for the Study Area to identify constraints and assess potential regulatory requirements for future development. The wetland mapping should be field verified to confirm the wetland class and boundary of any wetlands intersected or impacted by future development.

Table 2.1 Wetland Classification Definitions

Wetland Class	Central Zone	Description
Class II – temporary ponds	wet meadow zone	In freshwater temporary ponds, the central wet meadow zone is the deepest part of the wetland area and is usually dominated by western wheatgrass (*Pascopyrum smithii*) and foxtail barley (*Hordeum jubatum* ssp. *Jubatum*).
Class III – seasonal ponds	shallow marsh zone	Seasonal ponds are wetlands with a shallow marsh zone dominating the deepest part of the wetland area. These ponds are frequently surrounded by a ring of willows with a wet center containing sedges (*Carex* spp.).
Class IV – semi-permanent ponds	deep marsh zone	In semi-permanent ponds and lakes, the deep marsh zone dominates the deepest part of the wetland area. Common cattail (*Typha latifolia*) and bulrushes (*Scirpus* spp.) are typical emergent species.
Class V – permanent ponds	permanent open water zone	The permanent open water zone dominates the deepest part of the wetland area and is devoid of emergent vegetation.
Class VI – alkali ponds	intermittent-alkali zone	The intermittent-alkali zone is the deepest part of the wetland area. This zone may be devoid of emergent vegetation or beaked ditch grass (*Ruppia maritima*) may be present.

2.1.2 Land Cover Composition

Land cover composition was determined through review and analysis of data from the Agriculture and Agri-Food Canada's (AAFC) Annual Crop Inventory (AAFC 2021). Land cover classes were based on the AAFC definitions (Table 2.2). The Annual Crop Inventory often underrepresents wetlands on the landscape and therefore the wetlands were mapped and presented separately (see Section 2.1.1). Land cover composition has implications from the perspectives of regulatory approvals and potential environmental risks.

Table 2.2 Land Cover Classification Definitions

Land Cover Class[1]	Definition[2]
Agriculture	Dominated by seeded annual and perennial crops, usually a monoculture; and excludes grassland.
Broadleaf	Tall woody perennial species (deciduous), greater than 10 m tall, predominantly broadleaf forests or treed areas.
Coniferous	Predominantly coniferous forests or treed areas.
Exposed Land/Barren	Land that is predominately non-vegetated and non-developed. Includes: glacier, rock, sediments, burned areas, rubble, other naturally occurring non-vegetated surfaces. Excludes fallow agriculture.
Grassland	Dominated by native grass species (>51% native species), may include some shrubland cover.
Hayland[3]	Land seeded to perennial crops such as alfalfa and clover cut for hay.
Mixedwood	Forest that has a combination of both the coniferous and broadleaf tree species.
Shrubland	Predominantly woody perennial species and may include grass or wetlands with woody vegetation or regenerating forest.
Tame Pasture[3]	Dominated by seeded perennial species and used for grazing.
Urban/Developed	Land that is predominantly built-up or developed and vegetation associated with these land covers. This includes houses, farms, road surfaces, railway surfaces, buildings and paved surfaces, urban areas, industrial sites, mine structures, golf courses, and other developments.
Water	Waterbodies and waterways (e.g., lakes, reservoirs, rivers, streams, salt water).
Wetland	Land with a water table near, at, or above the soil surface for enough time to promote wetland or aquatic processes including (hydrophytic vegetation and, poorly drained soils). Includes Stewart and Kantrud (1971) wetland classes I to V.

Notes:

1 AAFC 2021.

2 Definitions modified from AAFC (2021).

3 Classified under Pasture/Forages in AAFC (2021).

2.1.3 Species of Conservation Concern

Species of Conservation Concern (SOCC) are defined as federally and provincially listed species at risk and species identified in federal and provincial tracking lists and activity restriction guidelines, including species:

- Listed under Schedule 1, Schedule 2, or Schedule 3 of the federal *Species at Risk Act* (SARA) as endangered, threatened, or special concern (Government of Canada [GOC] 2022)
- Listed in *The Wildlife Act* of Saskatchewan as endangered, threatened, or vulnerable
- Listed by the Committee on the Status of Endangered Wildlife in Canada (COSEWIC) as endangered, threatened, or special concern (GOC 2022)
- Assigned a ranking of S1, S2, or S3 (or a combination of these rankings) by the Saskatchewan Conservation Data Centre (SKCDC 2023a, 2023b, 2023c)
- Included in the Saskatchewan Activity Restriction Guidelines for Sensitive Species (Government of Saskatchewan [GOS] 2017)

The SKCDC tracked vascular plant species by ecoregion was used to determine potential plant SOCC expected within the ecoregion of the Study Area (SKCDC 2023c).

Hunting, Angling, and Biodiversity Information of Saskatchewan (HABISask) was used to determine the recorded historical occurrences of wildlife, plant, or fish SOCC within 1 kilometre (km) of the Study Area. A 1 km buffer around the Study Area was used to identify any other SOCC in proximity to the boundary that could be put at risk by development. Other wildlife SOCC whose ranges include the province of Saskatchewan were identified using the Species at Risk Public Registry (GOC 2023). The ranges of these species that overlap or nearly overlap the Study Area at some time of the year were identified by searching:

- The Canadian Herpetological Society (2023) for amphibians and reptiles
- The Cornell Lab of Ornithology (2023a) for birds
- The Nature Conservancy of Canada (2023) for mammals

The Saskatchewan Breeding Bird Atlas (Birds Canada 2023) and eBird (The Cornell Lab of Ornithology 2023b) were searched for observations of bird SOCC in the Saskatoon region.

2.1.4 Special Land Designations

Any special land designations or managed areas (e.g., Crown lands, land claims, provincial and national parks, conservation easements, lands protected under *The Wildlife Habitat Protection Act* [WHPA]) were identified to better understand land available for development and Crown stakeholders that may be involved in the review and approvals process. An approval must be granted by the Ministry of Environment (ENV) before conducting any work on Crown lands.

Protected areas are lands that are designated as part of the Protected and Conserved Area Network (PCAN) administered by the ENV Fish, Wildlife and Lands Branch. The PCAN conserves representative and unique landscapes in each of Saskatchewan's 11 ecoregions. PCAN includes lands and waters that are protected or have activity restrictions placed on them by legislation, agreement, or policy. These lands include national and provincial parks and recreation sites, ecological reserves, wildlife lands, game preserves, pastures, migratory bird sanctuaries, conservation easements, Water Security Agency lands, and other privately held stewardship lands.

Land claim areas are Crown mineral lands selected by Saskatchewan First Nations under either Treaty Land Entitlement of Specific Claim Settlement Agreements. This land may become reserve land (as defined in the *Indian Act*) under the terms of a Land Claim Agreement. The Saskatchewan Ministry of First Nations and Métis Relations is the provincial agency responsible for coordinating the review of land claim selections.

2.1.5 Sensitive Environmental Features

Areas of known habitat or environmental sensitivities (e.g., critical wildlife habitat as designated under the *Species at Risk Act*, Important Bird Areas, potential migration corridors) were reviewed for overlap with the Study Area. These features are not necessarily evident on the landscape are important to identify and consider during planning phases and when seeking regulatory approvals for any future development.

2.2 Results

2.2.1 Wetlands

There are 1,675 wetlands found within the Study Area, ranging from Class II to Class V wetlands and dugouts (Table 2.3; Figure 2). The total Study area is approximately 24,643.4 ha (refer to Section 2.2.2) with wetlands accounting for approximately 1,211.8 ha, or 5% of the Study Area.

Table 2.3 Wetlands within the Study Area

Wetland Class	Wetland Count	Area (ha)	Proportion (%)
Class II – Temporary Wetland	649	149.5	12.3
Class III – Seasonal Wetland	875	493.5	40.7
Class IV – Semi-Permanent Wetland	98	481.7	39.8
Class V – Permanent Wetland	9	79.6	6.6
Dugouts	44	7.4	0.6
Total	**1,675**	**1,211.8**	**100.0**

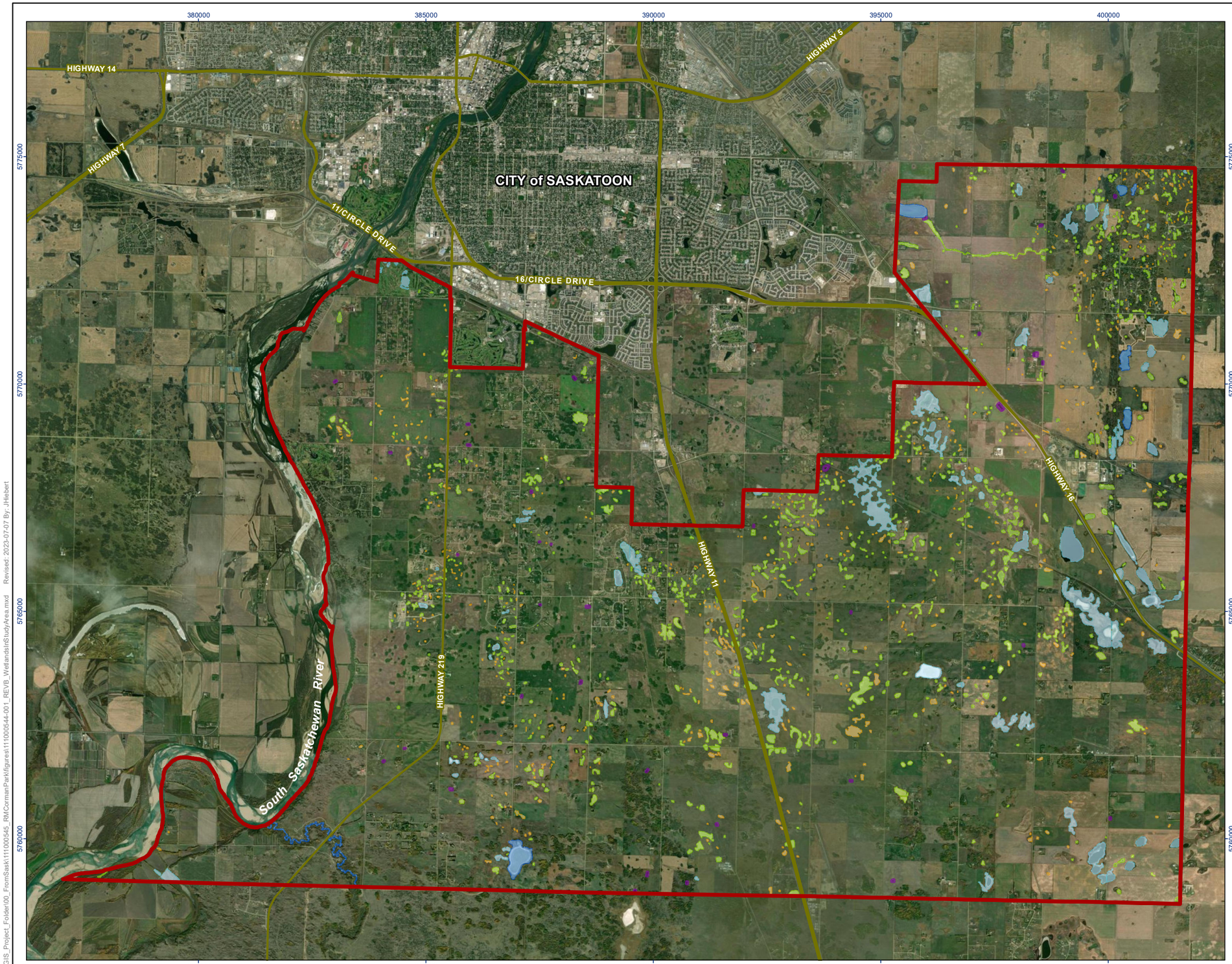

Stantec

Legend

- Study Area

Wetland Class

- Class 2 Temporary
- Class 3 Seasonal
- Class 4 Semi-Permanent
- Class 5 Permanent
- Dugout

N

0 1 2 Kilometers
(At original document size of 11x17)
1:85,000

Notes

1. Coordinate System: NAD 1983 UTM Zone 13N
2. Data Sources: Stantec Consulting; Base features produced under license with the Government of Saskatchewan
3. Background Orthoimagery: Source: Esri, Maxar, Earthstar Geographics, and the GIS User Community.

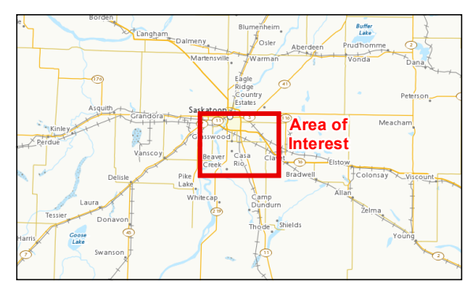

Project Location
RM of Corman Park,
Saskatchewan

Prepared by JH on 2023-07-07
TR by NK on 2023-07-07
IR Review by XX on 2023-07-07

Client/Project
111000544-001 REVB

RM of Corman Park
South RM Area Development Plan

Figure No.
2

Title
Wetlands in the Study Area

G:_GIS_Project_Folder\00_FromSask\111000545_RMCormanParkfigures\111000544-001_REVB_WetlandsInStudyArea.mxd Revised: 2023-07-07 By: JHilebert

Disclaimer: This document has been prepared based on information provided by others as cited in the Notes section. Stantec has not verified the accuracy and/or completeness of this information and shall not be responsible for any errors or omissions which may be incorporated herein as a result. Stantec assumes no responsibility for data supplied in electronic format, and the recipient accepts full responsibility for verifying the accuracy and completeness of the data.

2.2.2 Land Cover Composition

The Study Area includes the South R.M. of Corman Park outside of Saskatoon, Saskatchewan (**Error! Reference source not found.**). Based on the AAFC Annual Crop Inventory, the Study Area consists of approximately 34% agriculture, 30% pasture/ forages, 8% shrubland, 8% urban/developed, 5% wetlands, and 7% grasslands (Table 2.4). Areas of native vegetation are potential habitat for SOCC including grassland, shrubland, forested land (including broadleaf, coniferous, and mixedwood forests), tame pasture, and wetlands.

Table 2.4 Land Cover Composition within the Study Area

Land Cover Class[1]	Area (ha)	Proportion (%)
Agriculture	8,228.6	33.4
Broadleaf	562.7	2.3
Coniferous	95.8	0.4
Exposed Land/ Barren	176.1	0.7
Grassland	1,780.9	7.2
Mixedwood	0.9	<0.01
Pasture/ Forages	7,338.0	29.8
Shrubland	1,967.3	8.0
Urban/ Developed	1,941.0	7.9
Water	69.2	0.3
Wetland[2]	1,271.2	5.2
Total	**24,643.4**	**100.0**

Notes:

[1] Based on AAFC 2021

[2] Based on AAFC 2021 and does not include desktop wetland mapping.

Source: AAFC 2021.

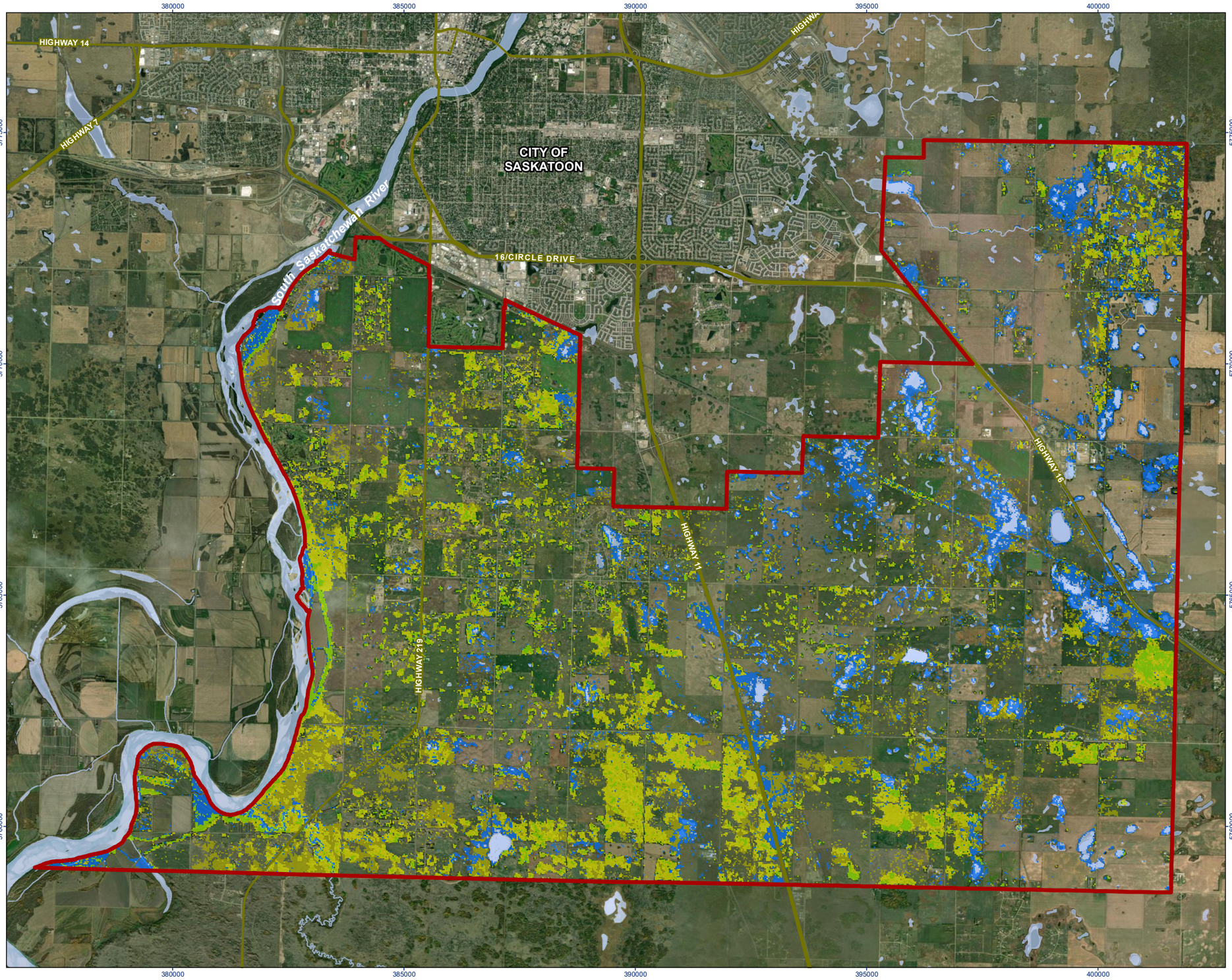

Stantec

Legend

- Study Area
- Major Roads

Landcover (AAFC 2021)

- Broadleaf
- Coniferous
- Grassland
- Mixedwood
- Shrubland
- Water
- Wetland

N

0 1 2 Kilometers
(At original document size of 11x17)
1:85,000

Notes

1. Coordinate System: NAD 1983 UTM Zone 13N
2. Data Sources: Base features produced under license with the Government of Canada.
3. Background Orthoimagery: Source: Esri, Maxar, Earthstar Geographics, and the GIS User Community.

Project Location
RM of Corman Park,
Saskatchewan

Prepared by on 2023-10-17
TR by NK on 2023-10-17

Client/Project
RM of Corman Park
South RM Area Development Plan

111000544-001 REVA 11x17

Figure No.
3

Title
Landcover

G:_GIS_Project_Folder\00_FromSask\111000545_RMCormanPark\figures\111000544_Corman_Park_Landcover_REVA_11x17.mxd Revised: 2023-10-17 By: JHiebert

Disclaimer: This document has been prepared based on information provided by others as cited in the Notes section. Stantec has not verified the accuracy and/or completeness of this information and shall not be responsible for any errors or omissions which may be incorporated herein as a result. Stantec assumes no responsibility for data supplied in electronic format, and the recipient accepts full responsibility for verifying the accuracy and completeness of the data.

2.2.3 Species of Conservation Concern

2.2.3.1 Plant SOCC

A search of HABISask (GOS 2023) identified 35 historical records of plant SOCC within 1 km of the Study Area (Table 2.5; Appendix A). Many of these observations were recorded along the South Saskatchewan River in areas of native vegetation (e.g., grassland, shrubland, broadleaf, coniferous wetlands, tame pasture).

Table 2.5 Historical Plant SOCC Records within 1 km of the Study Area

Common Name	Scientific Name	Provincial Rank[1]
American bugseed	*Corispermum americanum* var. *americanum*	S3
blue wild rye	*Elymus glaucus* ssp. *glaucus*	S3
bristle-leaved sedge	*Carex eburnea*	S3
bristly gooseberry	*Ribes oxyacanthoides* var. *setosum*	S2
bur ragweed	*Ambrosia acanthicarpa*	S2
bushy cinquefoil	*Potentilla supina* ssp. *paradoxa*	S3
Columbia needlegrass	*Anchnatherum nelsonii* ssp. *dorei*	S3
crawe's sedge	*Carex crawei*	S3
crowfoot violet	*Viola pedatifida*	S3
daisy fleabane	*Erigeron strigosus* var. *strigosus*	S3
dry goosefoot	*Chenopodium desiccatum*	S3
hairy bugseed	*Corispermum villosum*	S2
hooker's bugseed	*Corispermum hookeri* var. *hookeri*	S2
Louisiana broom-rape	*Orobanche ludoviciana*	S3
mingan moonwort	*Botrychium minganense*	S1
mucronate blue-eyed-grass	*Sisyrinchium mucronatum*	S3
Nevada bulrush	*Amphiscirpus nevadensis*	S3
northern blue-eyed-grass	*Sisyrinchium septentrionale*	S3
pale bulrush	*Scirpus pallidus*	S3
pallas' bugseed	*Corispermum pallasii*	S2
plains rough fescue	*Festuca hallii*	S3
porcupine sedge	*Carex hystericina*	S3
red elderberry	*Sambucus racemose* ssp. *pubens*	S2
red-stemmed cinquefoil	*Potentilla rubricaulis*	S3
rocky mountain sedge	*Carex saximontana*	S3
sand-dune wheatgrass	*Elymus lanceolatus* ssp. *psammophilus*	S2
sandhills cinquefoil	*Potentilla lasiodonta*	S2
small lupine	*Lupinus pusillus* ssp. *pusillus*	S3

Common Name	Scientific Name	Provincial Rank[1]
smooth goosefoot	*Chenopodium subglabrum*	S3
smooth hawk's-beard	*Crepis runcinate* ssp. *hispidulosa*	S1
soft wild bergamont	*Monarda fistulosa* var. *mollis*	S3
southern milk-vetch	*Astragulas australis* var. *glabriusculus*	S3
tall bur-marigold	*Bidens frondose*	S3
upright narrow-leaved pondweed	*Potamogeton strictifolius*	S3
water pimpernal	*Samolus parviflorus*	SH

Notes:

[1] SKCDC 2023d: S1 – critically imperiled, S2 – imperiled, S3 – vulnerable, SH – historical occurrence without recent verification (e.g., 20-40 years or older)

Source: GOS 2023

The Study Area is in the Moist Mixed Grassland ecoregion of the Prairie Ecozone. The landscape areas that intersect the Study Area include Moose Wood Sandhills, Elstow Plain, and Minichinas Upland.

There are 58 expected plant SOCC within the Moose Wood Sandhills landscape area with the potential to occur within the Study Area including one endangered species, hairy prairie clover (*Dalea villosa var. villosa*) (S2) (under Wild Species at Risk Regulations), and one threatened species, smooth goosefoot (S3) (under COSEWIC and SARA) (Appendix B).

There are 30 expected plant SOCC within the Elstow Plain landscape area with the potential to occur within the Study Area including hairy prairie clover (Appendix C).

There are 15 expected plant SOCC within the Minichinas Upland landscape area with the potential to occur within the Study Area (Appendix D).

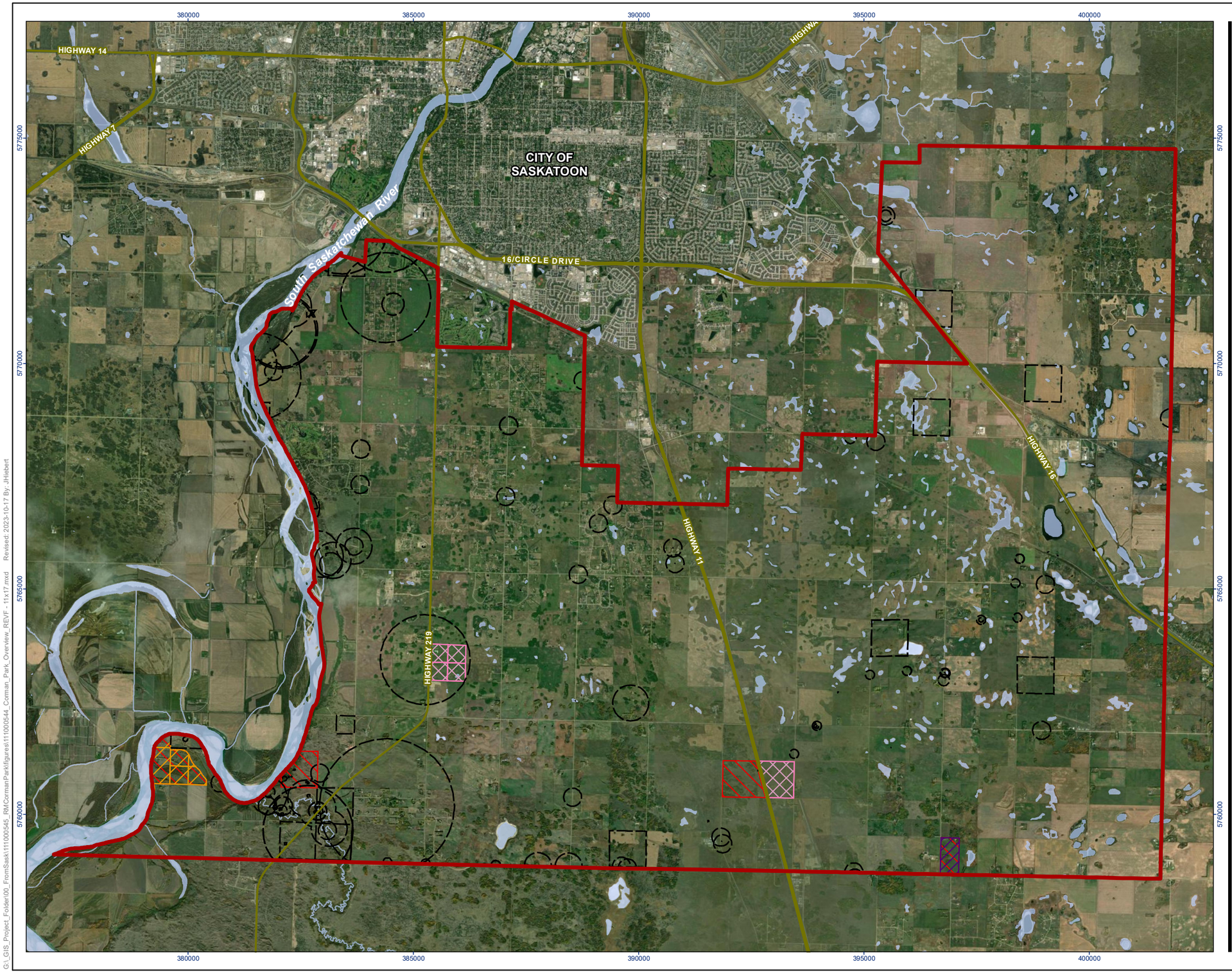

Stantec

Legend

- Study Area
- Major Roads
- Species of Conservation Concern (SOCC) Observations (Since 1993)

Land Designations

- Conservation Easement
- Land Claim
- Protected Area
- Wildlife Habitat Protection Land

N

0 1 2 Kilometers
(At original document size of 11x17)
1:85,000

Notes

1. Coordinate System: NAD 1983 UTM Zone 13N
2. Data Sources: Base features produced under license with the Government of Saskatchewan and the Government of Canada.
3. Background Orthoimagery: Source: Esri, Maxar, Earthstar Geographics, and the GIS User Community.

Project Location
RM of Corman Park,
Saskatchewan

Prepared by on 2023-10-17
TR by NK on 2023-10-17

Client/Project
RM of Corman Park
South RM Area Development Plan

111000544-001 REVF 11x17

Figure No.
4

Title
Biophysical Considerations

G:_GIS_Project_Folder\00_FromSask\111000545_RMCormanPark\figures\111000544_Corman_Park_Overview_REVF_11x17.mxd Revised: 2023-10-17 By: JHilsbert

Disclaimer: This document has been prepared based on information provided by others as cited in the Notes section. Stantec has not verified the accuracy and/or completeness of this information and shall not be responsible for any errors or omissions which may be incorporated herein as a result. Stantec assumes no responsibility for data supplied in electronic format, and the recipient accepts full responsibility for verifying the accuracy and completeness of the data.

2.2.3.2 Wildlife SOCC

A search of HABISask (GOS 2023) identified 36 historical records of wildlife and wildlife features SOCC, including six invertebrates and a Migratory Bird Concentration Site within 1 km of the Study Area (Table 2.6; Appendix A). Many of these observations were recorded in the City of Saskatoon and along the South Saskatchewan River to the south of Saskatoon.

Table 2.6 Historical Wildlife SOCC Records within 1 km of the Study Area

Common Name	Scientific Name	Provincial Rank[1]	COSEWIC[2]	SARA[3]
Birds				
bank swallow	*Riparia riparia*	S4M, S5M	Threatened	Threatened
barn swallow	*Hirundo rustica*	S4B	Special Concern	Threatened
bobolink	*Dolichonyx oryzivorus*	S5B	Special Concern	Threatened
Canada warbler	*Cardellina canadensis*	S4B, S3M	Special Concern	Threatened
Clark's grebe	*Aechmophorus clarkii*	S1B	-	-
common nighthawk	*Chordeiles minor*	S4B	Special Concern	Special Concern
Cooper's hawk	*Accipiter cooperii*	S4B, S2N, S2M	Not at Risk	-
glaucous gull	*Larus hyperboreus*	S2N	-	-
golden eagle	*Aquila chrysatos*	S3B, S3N, S4M	Not at Risk	-
Harris's sparrow	*Zonotrichia querula*	SUB, S5M	Special Concern	Special Concern
horned grebe	*Podiceps auritus*	S5B	Special Concern	Special Concern
loggerhead shrike	*Lanius ludovicianus excubitorides*	S3B	Threatened	Threatened
olive-sided flycatcher	*Contopus cooperi*	S4B	Special Concern	Special Concern
osprey	*Pandion haliaetus*	S3B	-	-
pileated woodpecker	*Dryocopus pileatus*	S3	-	-
pine grosbeak	*Pinicola enucleator*	S2B, S4N	-	-
piping plover	*Charadrius melodus circumcinctus*	S3B	Endangered	Endangered
red-headed woodpecker	*Melanerpes erythrocephalus*	S1B	Endangered	Endangered
sharp-tailed grouse[4]	*Tymanuchus phasianellus*	S5	-	-
sprague's pipit	*Anthus spragueii*	S3B	Threatened	Threatened
townsend's solitaire	*Myadestes townsendi*	S3N	-	-
turkey vulture	*Cathartes aura*	S3B	-	-
western grebe	*Aechmophorus occidentalis*	S3B	Special Concern	Special Concern
whooping crane	*Grus americana*	SXB, S1M	Endangered	Endangered
yellow-breasted chat	*Icteria virens auricollis*	S3B	Not at Risk	-
migratory bird concentration site	-	-	-	-

Common Name	Scientific Name	Provincial Rank[1]	COSEWIC[2]	SARA[3]
Mammals				
olive-backed pocket mouse	*Perognathus fasciatus*	S3	-	-
little brown myotis	*Myotis lucifugus*	S4B, S4N	Endangered	Endangered
Amphibians				
northern leopard frog	*Lithobates pipiens*	S3	Special Concern	Special Concern
Reptiles				
snapping turtle	*Chelydra serpentina*	S3	Special Concern	Special Concern
Invertebrates				
gibson's big sand tiger beetle	*Cicindela Formosa gibsoni*	S3	Threatened	Threatened
goldenrod gall fly	*Eurosta solidaginis*	S3	-	-
red twin-spot moth	*Xanthorhoe ferrugata ferrugata*	S3	-	-
striped hairstreak	*Satyrium liparops aliparops*	S3	-	-
striped meadowlark	*Sympetrum pallipes*	S3	-	-
yellow-banded bumble bee	*Bombus terricola*	S4	Special Concern	Special Concern

Notes:

[1] SKCDC 2023a, S1 – critically imperiled, S2 – imperiled, S3 – vulnerable, S4 – apparently, secure, S5 – secure, B – breeding population, M – migrant population, N – non-breeding population, U – status is uncertain

Source: GOS 2023

[2] *Species at Risk Act*

[3] Committee on the Status of Endangered Wildlife in Canada

[4] Included in the Saskatchewan Activity Restriction Guidelines for Sensitive Species (GOS 2017)

In addition to the species listed above, wildlife SOCC whose ranges overlap or nearly overlap the Study Area at some time of the year are listed in Appendix E. Three amphibian species, 31 bird species, and 2 mammal species were identified. In Saskatchewan, over 1,000 terrestrial invertebrates are ranked S1, S2, or S3 by the SKCDC. Of these, there are 10 that are also listed by SARA or COSEWIC and whose ranges overlap or nearly overlap the Study Area. Wildlife SOCC features that could occur in the area depending on habitat availability include gull and tern nesting colonies and bat roosting or foraging sites.

2.2.3.3 Fish SOCC

The Study Area overlaps with various wetlands and water features including the South Saskatchewan River. There are six historical records of fish SOCC within 1 km of the Study Area including Lake Sturgeon (S2), which is also listed as endangered by COSEWIC (Table 2.7; Appendix A). Any future development occurring in or near fish-bearing habitat may be subject to additional assessment and permitting under the authority of Fisheries and Oceans Canada (DFO).

Table 2.7 Historical Fish SOCC Records within the 1 km of the Study Area

Common Name	Scientific Name	Provincial Rank[1]	COSEWIC	SARA
blacknose dace	*Rhinichthys atratulus*	S3	-	-
common shiner	*Luxilus cornutus*	S3	-	-
river shiner	*Notropis blennius*	S3	-	-
flathead chub	*Platygobio garcillis*	S3	-	-
mooneye	*Hiodon tergisus*	S3	-	-
lake sturgeon	*Acipenser fulvescens*	S2	Endangered	-

Notes:
[1] SKCDC 2023a, S1 – critically imperiled, S2 – imperiled, S3 – vulnerable, S4 – apparently, secure, S5 – secure,
Source: GOS 2023

2.2.4 Special Land Designations

HABISask was used to determine if there were any special land designations within the Study Area. There are several special land designations within the Study Area including one conservation area, one private conservation easement land management under the provincial crown, five land claims, and ten areas protected under the WHPA areas within the Study Area (Table 2.8).

Table 2.8 Special Land Designations within the Study Area

Special Land Designation	Legal Land Description
Beaver Creek Conservation Area	SW-07-35-05-W3M
Private Conservation Easement	SW-03-35-04-W3M (Blk/Par A-Plan 101607634 Ext 1
Land Claims (20205)	NW-16-35-05-W3M
Land Claims (20206)	NW-16-35-05-W3M
Land Claims (20207)	NW-16-35-05-W3M
Land Claims (20208)	NW-16-35-05-W3M
Land Claims (22246)	SE-07-35-04-W3M
Wildlife Habitat Protection Act land	LSD 1-11-35-06-W3M
Wildlife Habitat Protection Act land	LSD 2-11-35-06-W3M

Special Land Designation	Legal Land Description
Beaver Creek Conservation Area	SW-07-35-05-W3M
Wildlife Habitat Protection Act land	LSD 7-11-35-06-W3M
Wildlife Habitat Protection Act land	LSD 8-11-35-06-W3M
Wildlife Habitat Protection Act land	NE-36-34-06-W3M Ext 1
Wildlife Habitat Protection Act land	NE-36-34-06-W3M Ext 2
Wildlife Habitat Protection Act land	NE-36-34-06-W3M Ext 4
Wildlife Habitat Protection Act land	NW-02-35-06-W3M Ext 0
Wildlife Habitat Protection Act land	NW-11-35-06-W3M Ext 0
Wildlife Habitat Protection Act land	SW-11-35-06-W3M Ext 0

2.2.5 Sensitive Environmental Features

There is one known Migratory Bird Concentration Site within the Study Area in the area surrounding the South Saskatchewan River (**Error! Reference source not found.**4). Due to the proximity of the South Saskatchewan River and the many wetlands within the Study Area, it is expected there is potential habitat for SOCC. Remnant patches of grassland, shrubland, and forest provide habitat for wildlife and may act as corridors to the South Saskatchewan River.

3 Heritage Resources

3.1 Methods

As defined by *The Heritage Property Act (*1979-80), a heritage property is an encompassing term used to describe:

- Archaeological objects;
- Paleontological objects;
- Any property that is of interest for its architectural, historical, cultural, environmental, archaeological, paleontological, aesthetic, or scientific value; or
- Any sites where any objects or property mentioned above is or may reasonably expected to be found.

As per Section 63 of *The Heritage Property Act* (1979-80), the Saskatchewan Heritage Conservation Branch (HCB; Ministry of Parks, Culture and Sport) requires the completion of a Heritage Resource Impact Assessment (HRIA) or Heritage Resource Impact Assessment-Mitigation (HRIA-M) for activities that have the potential to alter, damage, or destroy a heritage property. For southern Saskatchewan, the two primary factors used to determine HRIA and HRIA-M requirements are the presence of previously recorded heritage properties and the potential of an area to contain intact, significant heritage properties. Secondary factors include the nature and extent of previous land disturbances and the extent of proposed land alterations.

There are three levels of heritage sensitivity defined by the HCB not sensitive, sensitive, and conditionally sensitive. Quarter sections that are not heritage sensitive require no further heritage work; however, activities on heritage sensitive quarter sections require additional screening by the HCB to understand potential constraints/requirements before ground disturbance activities. For conditionally sensitive quarter sections, activities affecting areas of intact native vegetation will require screening, whereas activities to be conducted entirely within previously disturbed terrain can be exempt from further review. In these cases, the disturbance must be clearly visible on satellite imagery, saved as a screenshot, and kept on file by the proponent.

3.2 Results

Of the 416 quarter sections traversed by the Study Area, 110 are heritage sensitive, 72 are conditionally heritage sensitive, and 234 are not sensitive. A Provincial Archaeological Sites Database query identified 30 archaeological sites that have been documented in the Study Area (Figure 5): Artifact Scatters (n=13), Artifact Finds (n=14), a Single Feature site, a Multiple Feature site, and an Artifact/Feature Combination site. Table 3.1 and Table 3.2 summarize the archaeological site types documented in the Study Area to date.

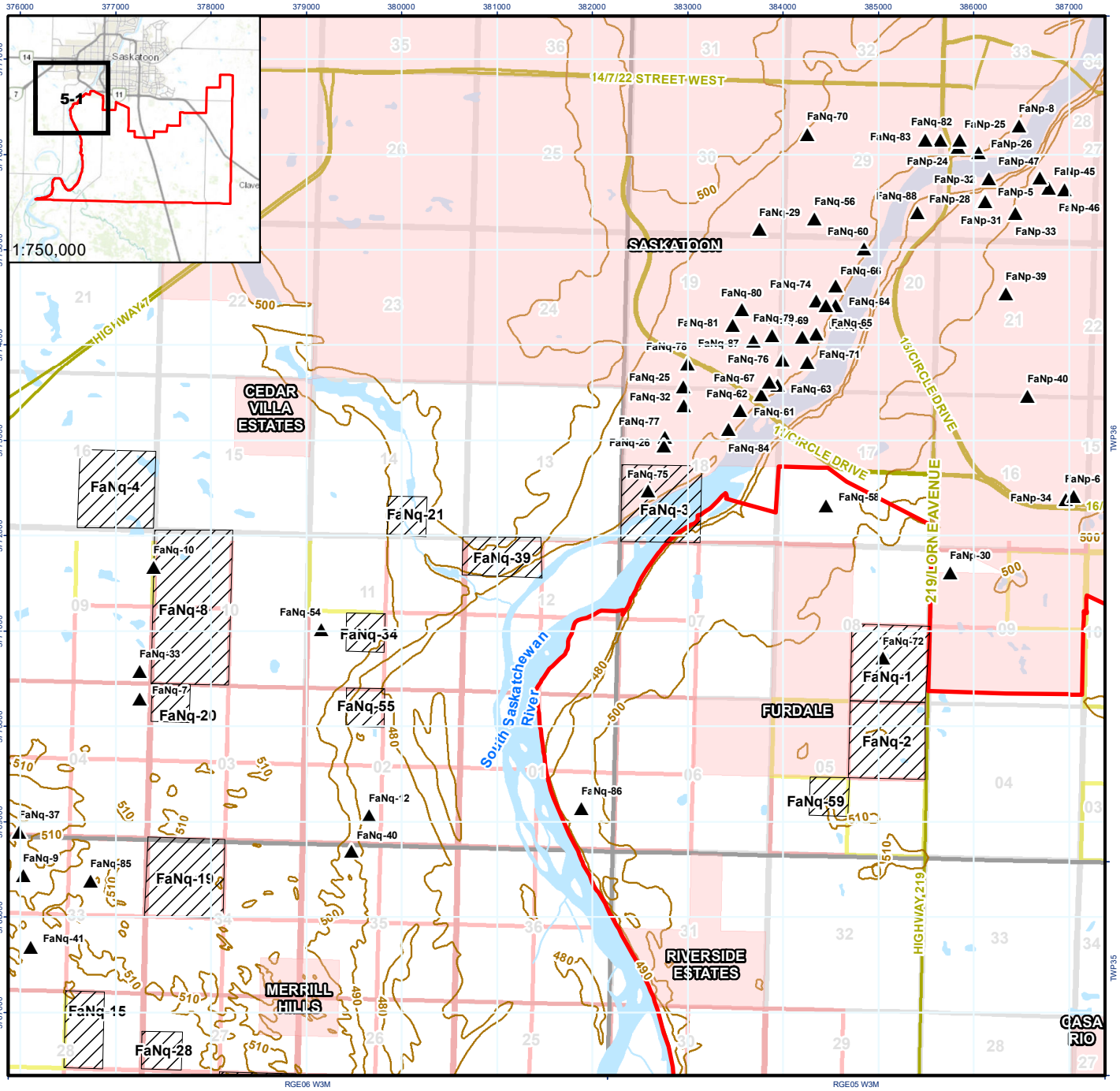

Stantec

Legend

- Documented Archaeological Site
- Reported Archaeological Site
- Study Area
- Township/Range
- Section
- Urban Municipality

Heritage Sensitivity

- Conditionally Sensitive
- Sensitive
- Waterbody
- Watercourse
- Contour (10 m)
- Major Roads

N

0 0.5 1 Kilometers
(At original document size of 8.5x11)
1:62,500

Notes

1. Coordinate System: NAD 1983 UTM Zone 13N
2. Data Sources: Government of Canada, Government of Saskatchewan
3. Sources: Esri, HERE, Garmin, Intermap, increment P Corp., GEBCO, USGS, FAO, NPS, NRCAN, GeoBase, IGN, Kadaster NL, Ordnance Survey, Esri Japan, METI, Esri China (Hong Kong), (c) OpenStreetMap contributors, and the GIS User Community

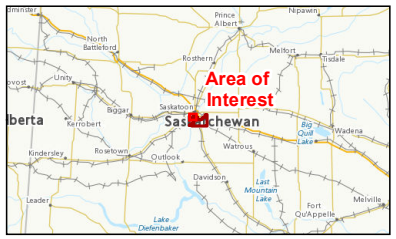

Project Location
Near Saskatoon, Saskatchewan

Prepared by MH on 2023-10-17
TR by TH on 2023-10-17

Client/Project
111000545-007 REVD
Rural Municipality of Corman Park
South Area Development Plan Heritage Screening

Figure No.
5-1

Title
Heritage Sensitivity Map Atlas

G:_GIS_Project_Folder\00_FromSask\111000545_RMCormanParkFigures\111000545-007_REVD_Heritage.mxd Revised: 2023-10-17 By: JHiebert

Disclaimer: This document has been prepared based on information provided by others as cited in the Notes section. Stantec has not verified the accuracy and/or completeness of this information and shall not be responsible for any errors or omissions which may be incorporated herein as a result. Stantec assumes no responsibility for data supplied in electronic format, and the recipient accepts full responsibility for verifying the accuracy and completeness of the data.

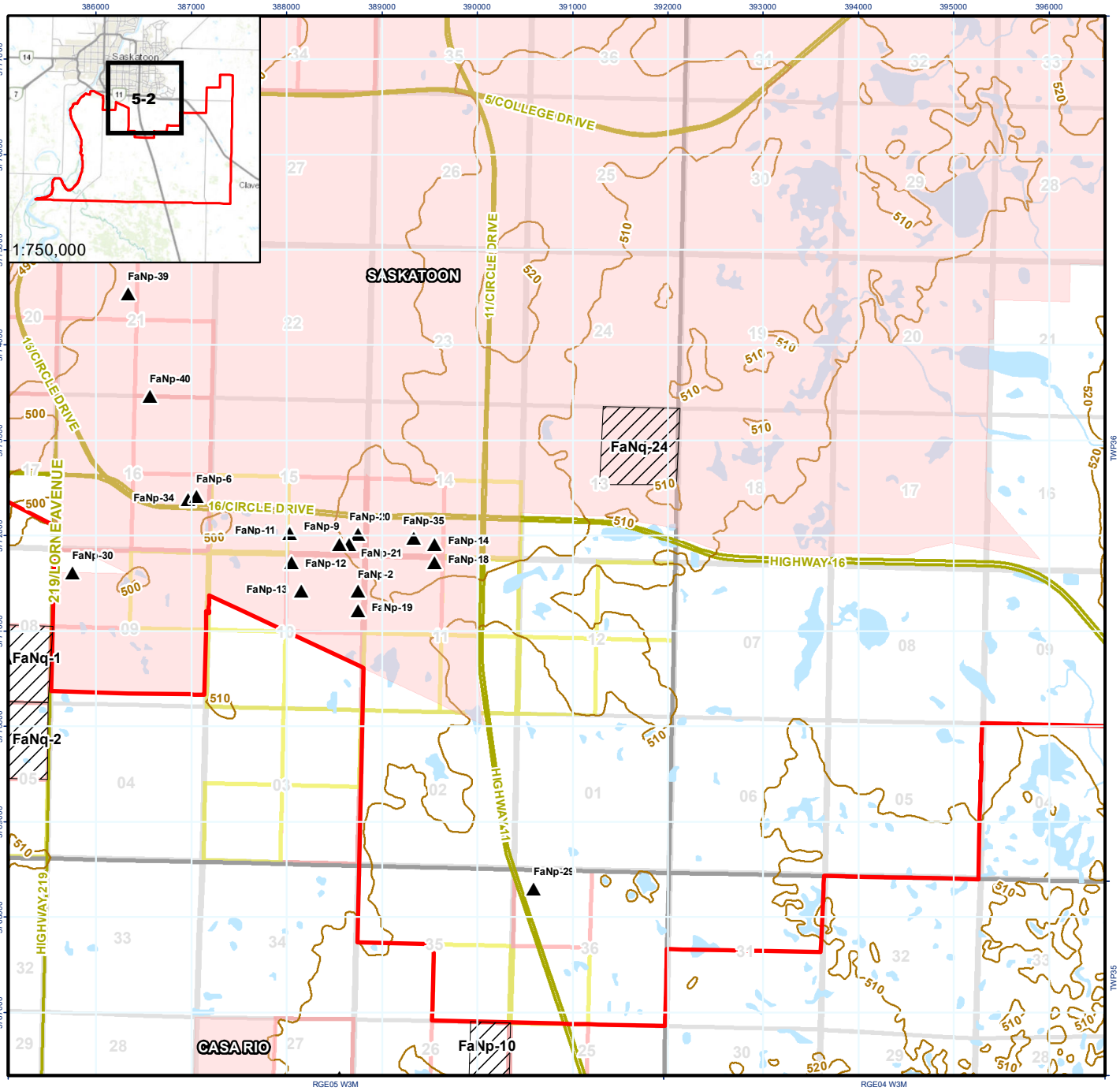

Stantec

Legend

- Documented Archaeological Site
- Reported Archaeological Site
- Study Area
- Township/Range
- Section
- Urban Municipality

Heritage Sensitivity

- Conditionally Sensitive
- Sensitive
- Waterbody
- Watercourse
- Contour (10 m)
- Major Roads

N

0 0.5 1 Kilometers
(At original document size of 8.5x11)
1:62,500

Notes

1. Coordinate System: NAD 1983 UTM Zone 13N
2. Data Sources: Government of Canada, Government of Saskatchewan
3. Sources: Esri, HERE, Garmin, Intermap, increment P Corp., GEBCO, USGS, FAO, NPS, NRCAN, GeoBase, IGN, Kadaster NL, Ordnance Survey, Esri Japan, METI, Esri China (Hong Kong), (c) OpenStreetMap contributors, and the GIS User Community

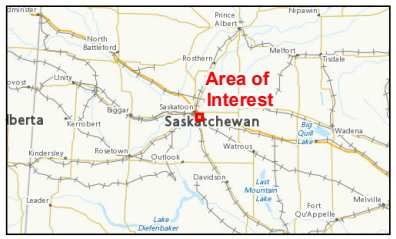

Project Location
Near Saskatoon, Saskatchewan

Prepared by MH on 2023-10-17
TR by TH on 2023-10-17

Client/Project 111000545-007 REVD

Rural Municipality of Corman Park
South Area Development Plan Heritage Screening

Figure No.
5-2

Title
Heritage Sensitivity Map Atlas

G:_GIS_Project_Folder\00_FromSask\111000545_RMCormanPark\figures\111000545-007_REVD_Heritage.mxd Revised: 2023-10-17 By: JHiebert

Disclaimer: This document has been prepared based on information provided by others as cited in the Notes section. Stantec has not verified the accuracy and/or completeness of this information and shall not be responsible for any errors or omissions which may be incorporated herein as a result. Stantec assumes no responsibility for data supplied in electronic format, and the recipient accepts full responsibility for verifying the accuracy and completeness of the data.

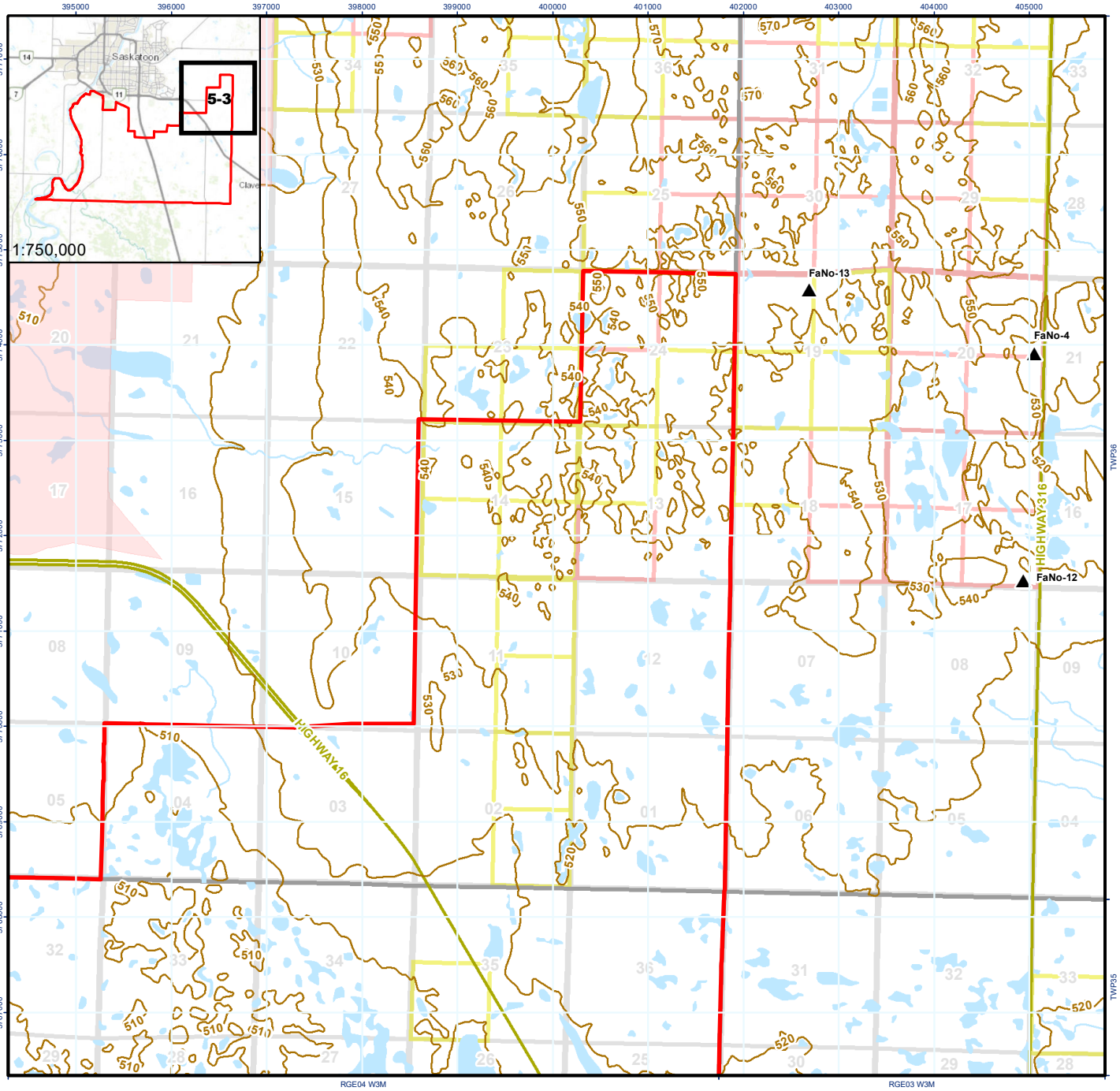

Stantec

Legend

- Documented Archaeological Site
- Study Area
- Township/Range
- Section
- Urban Municipality

Heritage Sensitivity

- Conditionally Sensitive
- Sensitive
- Waterbody
- Watercourse
- Contour (10 m)
- Major Roads

N

0 0.5 1 Kilometers
(At original document size of 8.5x11)
1:62,500

Notes

1. Coordinate System: NAD 1983 UTM Zone 13N
2. Data Sources: Government of Canada, Government of Saskatchewan
3. Sources: Esri, HERE, Garmin, Intermap, increment P Corp., GEBCO, USGS, FAO, NPS, NRCAN, GeoBase, IGN, Kadaster NL, Ordnance Survey, Esri Japan, METI, Esri China (Hong Kong), (c) OpenStreetMap contributors, and the GIS User Community

Project Location
Near Saskatoon,
Saskatchewan

Prepared by MH on 2023-10-17
TR by TH on 2023-10-17

Client/Project 111000545-007 REVD

Rural Municipality of Corman Park
South Area Development Plan Heritage Screening

Figure No.
5-3

Title
Heritage Sensitivity Map Atlas

G:_GIS_Project_Folder\00_FromSask\111000545_RMCormanPark\figures\111000545-007_REVD_Heritage.mxd Revised: 2023-10-17 By: JHiebert

Disclaimer: This document has been prepared based on information provided by others as cited in the Notes section. Stantec has not verified the accuracy and/or completeness of this information and shall not be responsible for any errors or omissions which may be incorporated herein as a result. Stantec assumes no responsibility for data supplied in electronic format, and the recipient accepts full responsibility for verifying the accuracy and completeness of the data.

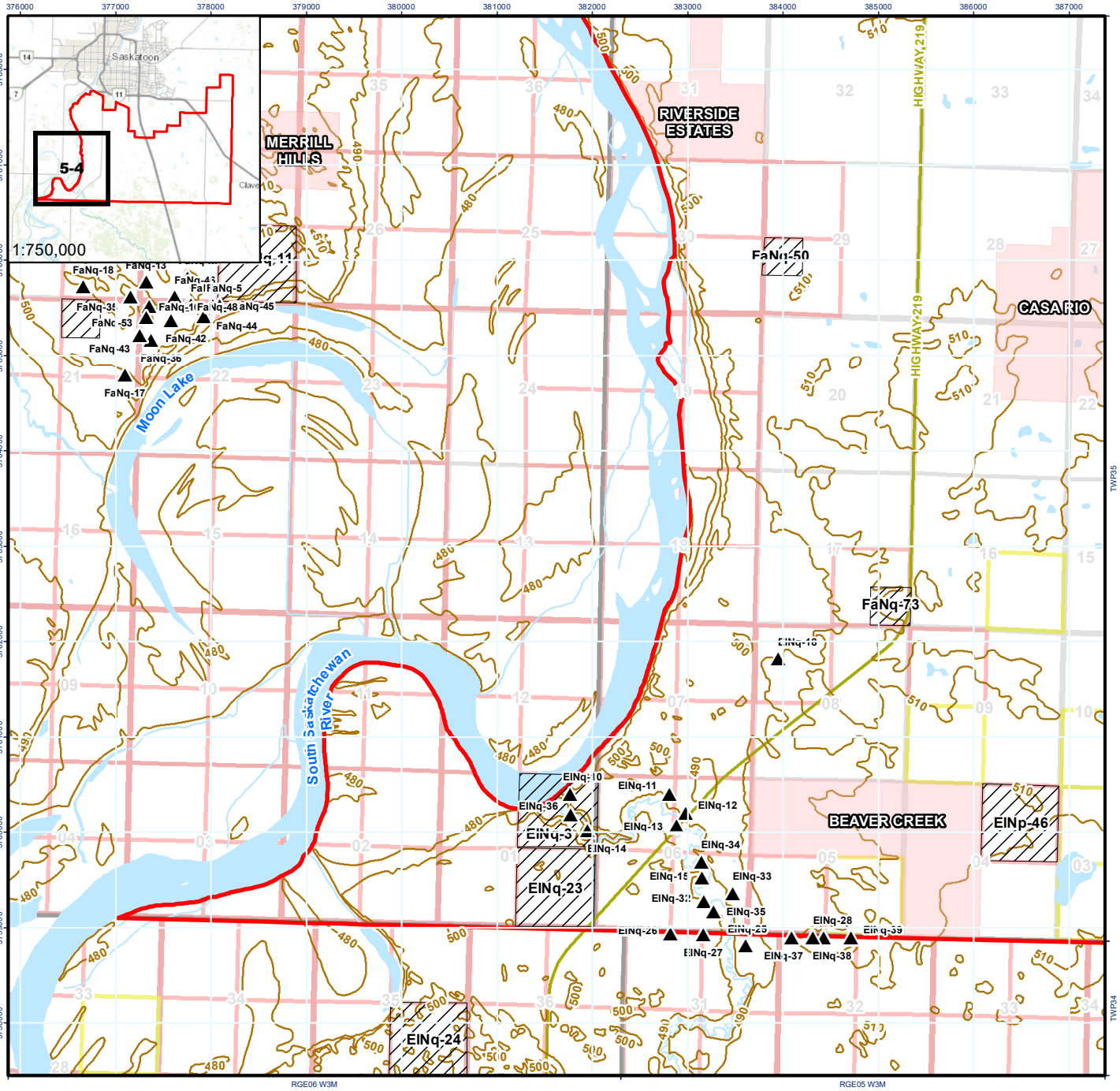

Stantec

Legend

- Documented Archaeological Site
- Reported Archaeological Site
- Study Area
- Township/Range
- Section
- Urban Municipality

Heritage Sensitivity

- Conditionally Sensitive
- Sensitive
- Waterbody
- Watercourse
- Contour (10 m)
- Major Roads

N

0 0.5 1 Kilometers
(At original document size of 8.5x11)
1:62,500

Notes

1. Coordinate System: NAD 1983 UTM Zone 13N
2. Data Sources: Government of Canada, Government of Saskatchewan
3. Sources: Esri, HERE, Garmin, Intermap, increment P Corp., GEBCO, USGS, FAO, NPS, NRCAN, GeoBase, IGN, Kadaster NL, Ordnance Survey, Esri Japan, METI, Esri China (Hong Kong), (c) OpenStreetMap contributors, and the GIS User Community

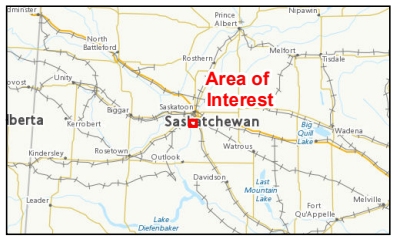

Project Location
Near Saskatoon, Saskatchewan

Prepared by MH on 2023-10-17
TR by TH on 2023-10-17

Client/Project 111000545-007 REVD

Rural Municipality of Corman Park
South Area Development Plan Heritage Screening

Figure No.
5-4

Title
Heritage Sensitivity Map Atlas

G:_GIS_Project_Folder\00_FromSask\111000545_RMCormanPark\figures\111000545-007_REVD_Heritage.mxd Revised: 2023-10-17 By: JHiebert

Disclaimer: This document has been prepared based on information provided by others as cited in the Notes section. Stantec has not verified the accuracy and/or completeness of this information and shall not be responsible for any errors or omissions which may be incorporated herein as a result. Stantec assumes no responsibility for data supplied in electronic format, and the recipient accepts full responsibility for verifying the accuracy and completeness of the data.

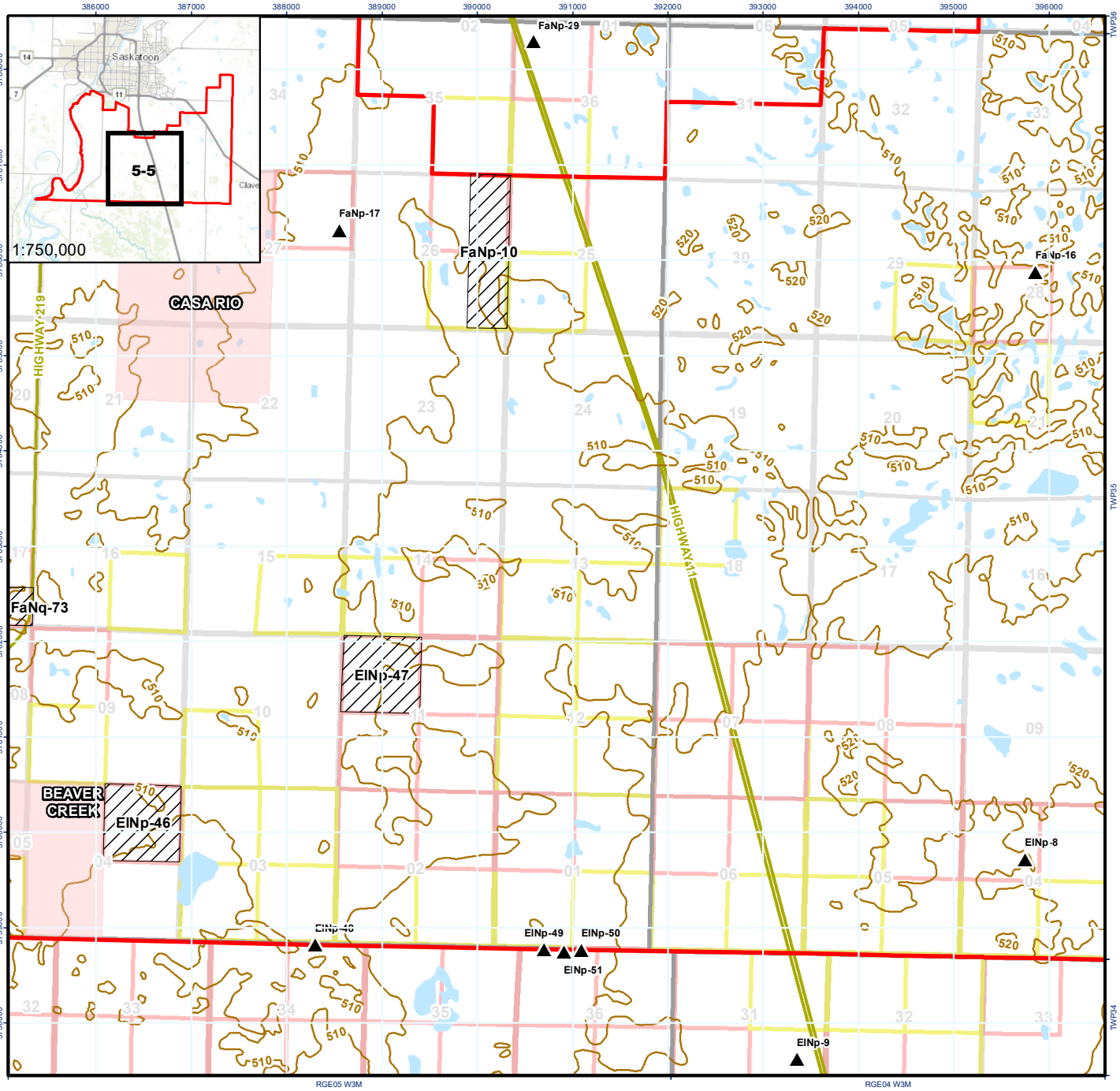

Stantec

Legend

- Documented Archaeological Site
- Reported Archaeological Site
- Study Area
- Township/Range
- Section
- Urban Municipality

Heritage Sensitivity

- Conditionally Sensitive
- Sensitive
- Waterbody
- Contour (10 m)
- Major Roads

N

0 0.5 1 Kilometers
(At original document size of 8.5x11)
1:62,500

Notes

1. Coordinate System: NAD 1983 UTM Zone 13N
2. Data Sources: Government of Canada, Government of Saskatchewan
3. Sources: Esri, HERE, Garmin, Intermap, increment P Corp., GEBCO, USGS, FAO, NPS, NRCAN, GeoBase, IGN, Kadaster NL, Ordnance Survey, Esri Japan, METI, Esri China (Hong Kong), (c) OpenStreetMap contributors, and the GIS User Community

Project Location
Near Saskatoon, Saskatchewan

Prepared by MH on 2023-10-17
TR by TH on 2023-10-17

Client/Project 111000545-007 REVD

Rural Municipality of Corman Park
South Area Development Plan Heritage Screening

Figure No.
5-5

Title
Heritage Sensitivity Map Atlas

G:_GIS_Project_Folder\00_FromSask\111000545_RMCormanPark\figures\111000545-007_REVD_Heritage.mxd Revised: 2023-10-17 By: JHiebert

Disclaimer: This document has been prepared based on information provided by others as cited in the Notes section. Stantec has not verified the accuracy and/or completeness of this information and shall not be responsible for any errors or omissions which may be incorporated herein as a result. Stantec assumes no responsibility for data supplied in electronic format, and the recipient accepts full responsibility for verifying the accuracy and completeness of the data.

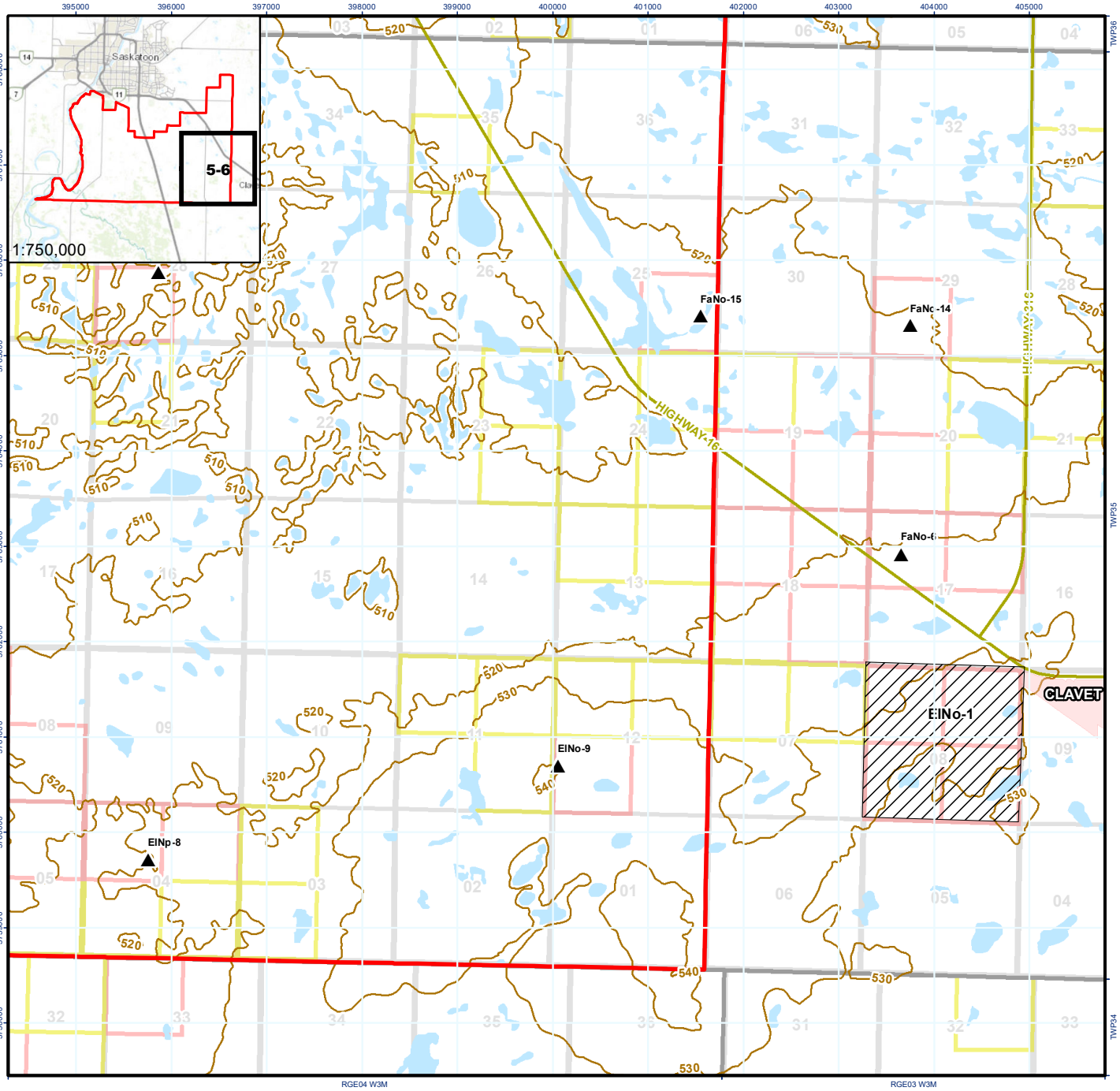

Stantec

Legend

- Documented Archaeological Site
- Reported Archaeological Site
- Study Area
- Township/Range
- Section
- Urban Municipality

Heritage Sensitivity

- Conditionally Sensitive
- Sensitive
- Waterbody
- Watercourse
- Contour (10 m)
- Major Roads

N

0 0.5 1 Kilometers
(At original document size of 8.5x11)
1:62,500

Notes

1. Coordinate System: NAD 1983 UTM Zone 13N
2. Data Sources: Government of Canada, Government of Saskatchewan
3. Sources: Esri, HERE, Garmin, Intermap, increment P Corp., GEBCO, USGS, FAO, NPS, NRCAN, GeoBase, IGN, Kadaster NL, Ordnance Survey, Esri Japan, METI, Esri China (Hong Kong), (c) OpenStreetMap contributors, and the GIS User Community

Project Location
Near Saskatoon, Saskatchewan

Prepared by MH on 2023-10-17
TR by TH on 2023-10-17

Client/Project 111000545-007 REVD

Rural Municipality of Corman Park
South Area Development Plan Heritage Screening

Figure No.
5-6

Title
Heritage Sensitivity Map Atlas

G:_GIS_Project_Folder\00_FromSask\111000545_RMCormanPark\figures\111000545-007_REVD_Heritage.mxd Revised: 2023-10-17 By: JHiebert

Disclaimer: This document has been prepared based on information provided by others as cited in the Notes section. Stantec has not verified the accuracy and/or completeness of this information and shall not be responsible for any errors or omissions which may be incorporated herein as a result. Stantec assumes no responsibility for data supplied in electronic format, and the recipient accepts full responsibility for verifying the accuracy and completeness of the data.

Table 3.1 Archaeological Site Types in the Study Area

Archaeological Site Type	Definition	Number
Artifact Find	Archaeological sites consisting of five or fewer artifacts.	19
Artifact Scatter	Archaeological sites consisting of six or more artifacts.	17
Single Feature	Archaeological sites consisting of one feature. Features are the non-portable remains of human activity which cannot be removed from the site without disturbing it (e.g.,: hearths, stone circles, etc.)	1
Multiple Feature	Archaeological site consisting of two or more features of different kinds.	1
Artifact/Feature Combination	Archaeological sites consisting of a combination of both artifacts and features.	1
	Total	**39**

Table 3.2 Previously Recorded Archaeological Sites in the Study Area

Borden Number	Location	Site Type	Chronological Period	Archaeological Resource Investigation Permit
ElNo-9	SW 12-35-4 W3M	Multiple Feature	Post-Contact	07-080:00
ElNp-40	SW 9-34-4 W3M	Artifact Find	Late Precontact	66-000:00
ElNp-49	NW 36-34-5 W3M	Artifact Scatter	Unknown Precontact	06-046:00
ElNp-50	NW 36-34-5 W3M	Artifact Find	Unknown Precontact	06-046:00
ElNp-51	NW 36-34-5 W3M	Artifact Scatter	Unknown Precontact	17-087:00
ElNp-8	NW 4-35-4 W3M	Artifact/Feature Combination	Late Precontact	92-004:00
ElNq-10	NE 1-35-6 W3M	Artifact Scatter	Unknown Precontact	83-009:00
ElNq-11	NW 6-35-5 W3M	Artifact Find	Unknown Precontact	83-009:00
ElNq-12	NE 6-35-5 W3M	Artifact Scatter	Late Precontact, Post-Contact	83-009:00
ElNq-13	NE 6-35-5 W3M	Artifact Scatter	Late Precontact, Post-Contact	83-009:00
ElNq-14	NE 1-35-6 W3M	Artifact Find	Unknown Precontact	83-009:00
ElNq-15	SE 6-35-5 W3M	Artifact Scatter	Middle Precontact, Late Precontact	N/A
ElNq-18	NW 8-35-5 W3M	Artifact Find	Unknown Precontact	82-000:00
ElNq-23	SE 1-35-6 W3M	Artifact Find	Unknown Precontact	66-000:00
ElNq-25	NE 31-34-5 W3M	Artifact Scatter	Unknown Precontact	06-046:00
ElNq-26	NW 31-34-5 W3M	Artifact Find	Unknown Precontact	06-046:00
ElNq-27	NE 31-34-5 W3M	Artifact Find	Unknown Precontact	06-046:00
ElNq-28	NW 32-34-5 W3M	Artifact Find	Unknown Precontact	06-046:00
ElNq-3	NE 1-35-6 W3M	Artifact Scatter	Unknown	N/A
ElNq-32	SE 6-35-5 W3M	Artifact Scatter	N/A	08-112:00

Borden Number	Location	Site Type	Chronological Period	Archaeological Resource Investigation Permit
ElNq-33	SE 6-35-5 W3M	Artifact Find	Unknown Precontact	08-112:00
ElNq-34	SE 6-35-5 W3M	Artifact Find	Unknown Precontact	08-112:00
ElNq-35	SE 6-35-5 W3M	Artifact Find	Unknown Precontact	08-112:00
ElNq-36	NE 1-35-6 W3M	Artifact Find	Early Precontact, Middle Precontact	N/A
ElNq-37	NW 32-34-5 W3M	Artifact Find	Unknown Precontact	17-087:00
ElNq-38	NW 32-34-5 W3M	Artifact Find	Unknown Precontact	17-087:00
ElNq-39	NW 32-34-5 W3M	Artifact Scatter	Unidentified Precontact	17-087:00
FaNm-2	Protected Under Section 64 of *The Heritage Property Act*.	Site of Special Nature	Unknown	63-000:00
FaNo-15	SE 25-35-4 W3M	Artifact Scatter	Unknown Precontact	95-018:00
FaNp-16	SW 28-35-4 W3M	Artifact Find	Unknown Precontact	77-000:00
FaNp-17	NE 27-35-5 W3M	Artifact Find	Late Precontact	77-000:00
FaNq-1	SE 8-36-5 W3M	Artifact Scatter	Middle Precontact, Late Precontact	N/A
FaNq-2	NE 5-36-5 W3M	Artifact Scatter	Unknown	N/A
FaNq-28	NW 27-35-6 W3M	Artifact Scatter	Middle Precontact, Late Precontact	N/A
FaNq-47	NE 21-35-6 W3M	Artifact Scatter	Unknown Precontact	N/A
FaNq-50	SW 29-35-5 W3M	Artifact Scatter	Late Precontact	N/A
FaNq-58	SW 17-36-5 W3M	Artifact Scatter	Unknown Precontact	89-043:00
FaNq-59	SW 5-36-5 W3M	Artifact Scatter	Middle Precontact, Late Precontact	84-000:00
FaNq-72	SE 8-36-5 W3M	Artifact Find	Late Precontact	N/A
FaNq-73	SE 17-35-5 W3M	Artifact Find	Unknown Precontact	77-000:00
FaNq-8	W 10-36-6 W3M	Artifact Scatter	Middle Precontact, Late Precontact	N/A
FaNq-86	SE 1-36-6 W3M	Single Feature	Post-Contact	12-266:00
FaNr-3	SW 31-35-6 W3M	Artifact Scatter	Late Precontact	73-000:00
FaNr-4	SW 31-35-6 W3M	Artifact Scatter	Late Precontact	73-000:00

Although landowners documented some of the sites in the Study Area before the implementation of *The Heritage Property Act*, many were identified through permitted archaeological studies. These studies include industry-triggered HRIAs to support fibre optic and distribution line installations (Golder 2006a, 2006b, 2017), land developments (Stantec 2012), agricultural processing sites (Sentar Consultants Ltd. 1995), and academic studies through the University of Saskatchewan (Kennedy 2007), and avocational archaeological studies in the Beaver Creek area (Walker 1983, Walker & Klein 2008). Diagnostic artifacts recovered from these sites indicate that past peoples have occupied the area since the Early Precontact Period (12,000 to 10,000 years before present).

4 Discussion and Recommendations

A natural area screening was completed to evaluate the Study Area's wetlands and biophysical features to identify potential constraints that could require mitigations and/or additional surveys prior to future development including subdividing larger parcels, commercial development, or industrial uses particularly along the corridors of Highway 11 and 219. A heritage screening was also completed as per Section 63 of *The Heritage Property Act* (1979-80) to determine heritage sensitivities and archeological sites.

The desktop screening was conducted using digital information sources including the ENV HABISask online mapping application, the Provincial Archaeological Sites Database, and Stantec's knowledge of the risks associated with each of the information categories described below.

4.1 Biophysical Considerations

A natural area screening was completed for biophysical components that should be considered for future development planning. Information types reviewed included those that have the potential to constrain development, require additional approvals or permitting, and/or require mitigation. Specific information types that were reviewed include wetlands, land cover types, SOCC, special land designations, and sensitive environmental features.

Results of the natural screening indicate that the Study Area is primarily used for agricultural purposes such as cultivation, pasture, and forage crops. However, natural areas such as wetlands and grasslands also occur throughout the Study Area. The natural area screening identified one conservation area, one private conservation easement, five land claims, and ten areas protected under the WHPA within the Study Area. In addition, the screening identified a designated Migratory Bird Concentration Site associated with South Saskatchewan River, which is a sensitive environmental feature.

It is recommended that natural areas, areas with special land designations, and sensitive environmental features are avoided for future development. Additional discussion with and approvals from ENV will be required for any proposed projects within these areas. Potential approvals and permits for developing in these areas include:

- Clearance from ENV may be required for projects that encroach or develop on natural areas including grasslands, shrublands, forests, and wetlands.
- Aquatic Habitat Protection Permits (AHPPs) are required for any works within the bed, boundary, or bank of wetlands and other water features (e.g., watercourses).
- Crown mineral lands selected by Saskatchewan First Nations under either Treaty Land Entitlement of Specific Claim Settlement Agreements may become reserve land under the terms of a Land Claim Agreement. Approval from the First Nation and/or the Saskatchewan Ministry of First Nations and Métis Relations may be required for projects that encroach or develop on land claims land. Approvals from Indigenous Services Canada may also be required for development on First Nations land.

- Crown Land Work Authorizations and/or Crown Land Clearances will be required for work on Ministry of Agriculture or ENV Crown Lands (including WHPA lands).
- Reviews and/or approvals under the federal *Fisheries Act* may be required for any proposed works occurring in fish habitat such as the South Saskatchewan River.

Biophysical surveys may need to be completed in support of projects that require the approvals and permits listed above. Completion of biophysical surveys will further support the identification of site-specific conditions, identify sensitive environmental features requiring mitigation, and confirm permitting and approval requirements. Biophysical survey types that may be required for development within specific land cover types are presented in Table 4.1.

Table 4.1 Potential Biophysical Survey Requirements

Survey Type / Provincial Species Detection Protocol	Number of Required Survey Visits	Survey Timing	Typical Habitat Type(s) for Surveys
1.0 Auditory (nocturnal) amphibian	3	Approximately May 20 – June 20 (April 20-May 20 for northern leopard frog), depending on weather conditions Survey all potential breeding habitat within the Study Area and surrounding 500 m	Wetland
5.0 Burrowing owl call-playback	3	May 15 – June 15 Survey all potential nesting habitat within the Study Area and surrounding 1,000 m	Grassland
6.0 Short-eared owl (nocturnal)	3	May 1 – June 30 Survey all potential nesting habitat within the Study Area and surrounding 1,000 m	Grassland; Pasture/Forages
9.0 Grassland bird	2	May 23 – July 7 Surveys must be separated by at least 10 days	Grassland
7.0 Prairie raptors	2	May 1 – June 30 Survey all potential nesting habitat within the Study Area and surrounding 1,000 m	Grassland; Linear developments, non-linear developments
8.0 Boreal and foothills raptors	2	May 1 – June 30 Survey all potential nesting habitat within the Study Area and surrounding 1,000 m	Broadleaf; Coniferous; mixedwood
10.0 Forest Birds Surveys	3	May 28 to July 5 Surveys must be separated by at least 10 days	Broadleaf; Coniferous; Mixedwood
11.0 Sharp-tailed grouse lek	2	March 15 – May 15 Survey all potential lek habitat within the Study Area and surrounding 400 m	Grassland; Pasture/Forages
12.0 Western Grebe	2	May 18 – June 15 Surveys must be separated by 14 days	Lake

Survey Type / Provincial Species Detection Protocol	Number of Required Survey Visits	Survey Timing	Typical Habitat Type(s) for Surveys
14.0 Yellow rail (nocturnal)	2 to 3	May 16 – July 7	Wetland
15.0 Common nighthawk (nocturnal)	2	May 25 – June 30 Survey all potential nesting habitat within the Study Area and surrounding 200 m	Broadleaf; Coniferous; Mixedwood (openings within forest); Pasture/Forages
16.0 Bats	2	May 1 – August 31	Various (buildings, tree cavities, rock crevices)
20.0 Vascular Plants	2	May 15 – July 1 and July 2 to September 15 Surveys must be separated by at least 7 weeks	Various
Wetland validation[1]	1	July 1 – September 1	Wetland

Note:

[1] Surveys follow provincial Species Detection Survey Protocols from ENV (or prescribed alternative methods) unless otherwise noted.

Mitigation measures that should be implemented for project development will vary depending on site-specific conditions and constraints. However, general overarching biophysical mitigation measures that should be considered include the avoidance of natural areas, special land designations, and sensitive environmental features to the extent feasible. In addition, construction activities should generally avoid sensitive breeding windows (April 22 to August 24 for SADP; GOC 2023b). If avoidance of these areas and timing windows is not possible, it is recommended that the R.M of Corman Park works with appropriate regulators (e.g., ENV, Water Security Agency [WSA], Indigenous Services Canada [ISC], DFO) to determine appropriate levels of study for field surveys, confirm permitting requirements, and discuss required mitigation strategies.

4.2 Heritage Resources

A Heritage Resource Review Referral (Heritage Referral) to the HCB should be submitted for any ground disturbance activities in sensitive and conditionally sensitive quarter sections in the Study Area to determine HRIA requirements pursuant to Section 63 of *The Heritage Property Act* (Appendix F). Completion of additional review of conditionally sensitive quarter sections, a Heritage Referral, or HRIA is not included in the current scope of work for the Project.

Should an HRIA be initiated for the Project, it is recommended that a pre-impact HRIA be completed in snow and frost-free conditions before any ground disturbance activities. Avoidance of archaeological sites is always the best mitigation. However, depending on the site type, context of discovery and degree of conflict, other mitigation options may be required. General heritage resource mitigation measures that should be considered include:

- detailed assessment.
- implementing site protection such as stabilization practices, fences.
- surface collection to salvage archaeological resources.
- construction monitoring.
- salvage/compensatory mitigation.
- Phase 1 (small scale) excavation.

In the event a site of special nature is identified, an increased avoidance buffer of up to 250 m may be required. Recommendations for appropriate mitigative measures are subject to approval by the HCB.

5 References

AAFC (Agriculture and Agrifood Canada). 2021. Annual Crop Inventory. Available at: https://open.canada.ca/data/en/dataset/199e4ab6-832b-4434-ac39-e4887d7cc4e5. Accessed June 2023.

GOC (Government of Canada). 2002. Species at Risk Act. Last amended 2022.

GOC. 2022. Species at Risk Public Registry. Available at: https://www.canada.ca/en/environment-climate-change/services/species-risk-public-registry.html. Accessed: April 2023.

GOC. 2023. Species at Risk Public Registry Species Search. Available at https://species-registry.canada.ca/index-en.html#/species?sortBy=commonNameSort&sortDirection=asc&pageSize=10. Accessed: July 2023.

GOC. 2023b. General nesting periods of migratory birds. Available at: https://www.canada.ca/en/environment-climate-change/services/avoiding-harm-migratory-birds/general-nesting-periods/nesting-periods.html#_zoneB_calendar.

Golder Associates Ltd. 2006a. Heritage Resources Impact Assessment: SaskTel Fibre Optic Cable Whitecap Dakota First Nation Installation Program. Permit No. 05-118. Final Report on file with the Heritage Conservation Branch, Regina.

Golder Associates Ltd. 2006b. Heritage Resources Impact Assessment: SaskEnergy Whitecap Dakota Gas Distribution Line Project. Permit No. 06-046. Final Report on file with the Heritage Conservation Branch, Regina.

Golder Associates Ltd. 2017. TransGas Inc. Heritage Resource Impact Assessment of the Saskatoon South Distribution Line. Permit No. 17-087 Final Report on file with the Heritage Conservation Branch, Regina.

GOS (Government of Saskatchewan). 1998. The Wildlife Act. Last amended: 2020.

GOS. 1999. The Wild Species at Risk Regulations.

GOS. 2017. Saskatchewan Activity Restriction Guidelines for Sensitive Species. http://www.publications.gov.sk.ca/details.cfm?p=79241. Accessed April 2023.

GOS. 2023. Hunting, Angling, and Biodiversity Information of Saskatchewan (HABISask) online mapping application. Available at: https://gisappl.saskatchewan.ca/Html5Ext/?viewer=habisask. Accessed April 2023.

Huel, D. 2000. Managing Saskatchewan Wetlands – A Landowner's Guide. Saskatchewan Wetland Conservation Corporation. Regina, Saskatchewan.

Kennedy, Margaret. 2007. Permit No. 07-080. Final Report on file with the Heritage Conservation Branch, Regina.

Saskatchewan Breeding Bird Atlas. 2023. Region # 10 (Brightwater). https://naturecounts.ca/nc/skatlas/atlas_stats.jsp?type=species&region=SK10. Accessed July 2023.

Sentar Consultants Ltd. 1995. Heritage Resource Impact Assessment of the Cargill Ltd. Oilseed Crushing Plant Site 29-35-3-W3M. Permit 95-018. Final Report on file with the Heritage Conservation Branch, Regina.

SKCDC (Saskatchewan Conservation Data Centre). 2023a. Saskatchewan Vascular Plant Tracked Taxa List. Available at: http://biodiversity.sk.ca/TaxaList/sk-taxa-vascularplant-track.pdf. Accessed: April 2023.

SKCDC. 2023b. Saskatchewan Vertebrate Tracked Taxa List. Available at: http://biodiversity.sk.ca/TaxaList/sk-taxa-vertebrate-track.pdf. Accessed: April 2023.

SKCDC. 2023c. Tracked Vascular Plant Species by Ecoregion. Available at: http://biodiversity.sk.ca/SppList.htm. Accessed: April 2023.

SKCDC. 2023d. Species Conservation Rankings. Available at: http://biodiversity.sk.ca/ranking.htm. Accessed June 2023.

Stewart, R. E. and H.A. Kantrud. 1971. Classification of natural ponds and lakes in the glaciated prairie region. Resource Publication 92, Bureau of Sport Fisheries and Wildlife, U.S. Fish and Wildlife Service, Washington, D.C.

The Canadian Herpetological Society. 2023. Amphibians and Reptiles of Canada. https://www.canadianherpetology.ca/species/index.html. Accessed: July 2023.

The Cornell Lab of Ornithology. 2023a. https://www.birds.cornell.edu/home/. Accessed: July 2023.

The Cornell Lab of Ornithology. 2023b. Saskatoon Region. ebird https://ebird.org/region/CA-SK-EL?yr=all. Accessed: July 2023.

The Nature Conservancy of Canada. 2023. Mammals. https://www.natureconservancy.ca/en/what-we-do/resource-centre/featured-species/mammals/. Accessed: July 2023.

Walker, Ernest G.1983. Beaver Creek Archaeological Resource Assessment - Beaver Creek Conservation Area. Permit 83-009. Final Report on file with the Heritage Conservation Branch, Regina.

Walker, Sandra & Marcia Klein. 2008. Saskatoon Public School Division Archaeological Study. Permit No. 08-112. Final Report on file with the Heritage Conservation Branch, Regina.

Appendices

Appendix A Project Screening Report

Project Screening Report

Notes:

Report Generated
05/26/2023

Map Information

Buffer Size:

1 Kilometers

Coordinates:
Lat: 52.02471° N
Lon: -106.57953° W

Area of Interest

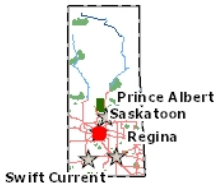

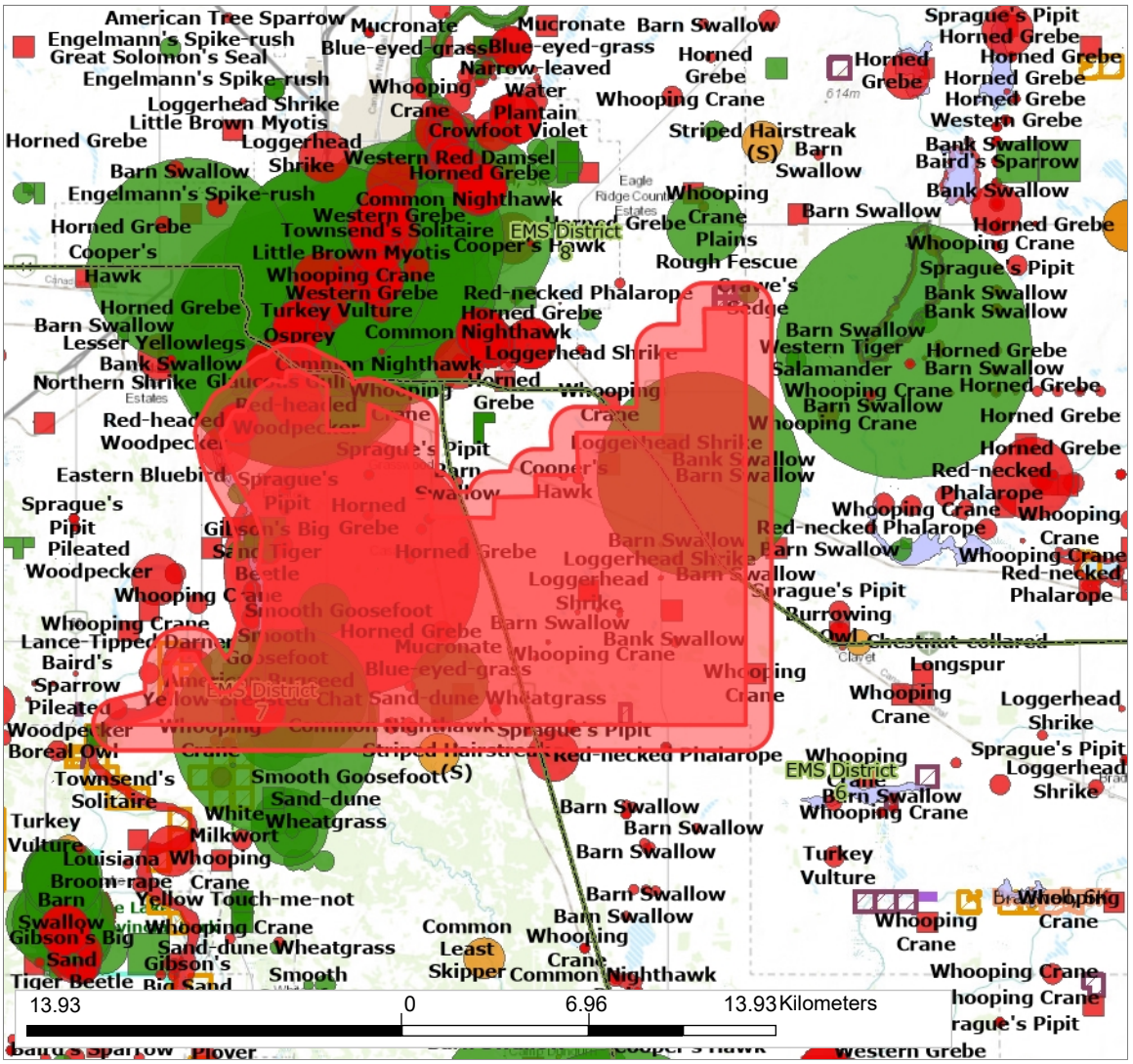

Screened Areas:

- Ecological Management Specialists (EMS) District
- Compliance & Field Service (CFS) Area
- Compliance & Field Service (CFS) Region
- Area Fisheries Ecologists Area(s)
- Area Wildlife Ecologist(s)
- Rural Municipality
- First Nation Reserve
- AG Crown Land Management Specialist Districts
- Rare and Endangered Species
- Fish Species
- Woodland Caribou Range
- Species Predictive Models
- Whooping Crane Corridor
- Federal Critical Habitat
- Proposed Critical Habitat
- Wind Energy Avoidance Zones
- Important Natural Areas
- Provincial Parks
- Recreation Sites
- Game Preserves
- National Wildlife Areas
- Federal Pastures
- Wildlife Habitat Protection Act Lands
- Fish & Wildlife Development Fund Lands
- Migratory Bird Sanctuary
- Wildlife Refuge
- Conservation Easements
- Crown Conservation Easements
- Ecological Reserves
- Ramsar Wetlands
- Reservoir Development Areas
- Representative Areas

Project Screening Report

Species Likely to be Present

Known Species

"Known" species are species that have known occurrences in the area from the Saskatchewan Conservation Data Centre's Rare and Endangered Species map layer. However, absence of species observation records does not preclude the existence of species in the area of interest. Observations may simply not have been recorded for the given area or may not have yet been entered into the ministry data holdings – new observation records are continuously being discovered. Information accessible through HABISask is not intended to be a definitive statement on the presence, absence or status of a species within a given area, nor as a substitute for onsite surveys.

Rare and Endangered Species

Category: Animal Assemblage

Common Name	Scientific Name:	G Rank	N Rank	S Rank	COSEWIC	SARA Status	Wild Species at Risk Regulations
Migratory Bird Concentration Site	*Migratory Bird Concentration Site*	G3	N3	S3			

Category: Invertebrate Animal

Common Name	Scientific Name:	G Rank	N Rank	S Rank	COSEWIC	SARA Status	Wild Species at Risk Regulations
Gibson's Big Sand Tiger Beetle	*Cicindela formosa gibsoni*	G5T3	N3	S3	Threatened	Threatened	
Goldenrod Gall Fly	*Eurosta solidaginis*	GNR	NNR	S3			
Red Twin-Spot Moth	*Xanthorhoe ferrugata ferrugata*	G5TNR	NNR	S3			
Striped Hairstreak (S)	*Satyrium liparops aliparops*	G5TU	N3N4	S3			
Striped Meadowhawk	*Sympetrum pallipes*	G5	N5	S3			
Yellow-banded Bumble Bee	*Bombus terricola*	G3G4	N4?	S4	Special Concern	Special Concern	

Category: Vascular Plant

Common Name	Scientific Name:	G Rank	N Rank	S Rank	COSEWIC	SARA Status	Wild Species at Risk Regulations
American Bugseed	*Corispermum americanum var. americanum*	G5?T5?	N4?	S3			
Blue Wild Rye	*Elymus glaucus ssp. glaucus*	G5T5	NNR	S3			
Bristle-leaved Sedge	*Carex eburnea*	G5	N5	S3			
Bristly Gooseberry	*Ribes oxyacanthoides var. setosum*	G5T4T5	N2	S2			
Bur Ragweed	*Ambrosia acanthicarpa*	G5	N3	S2			
Bushy Cinquefoil	*Potentilla supina ssp. paradoxa*	G5T5	N4N5	S3			
Columbia Needlegrass	*Achnatherum nelsonii ssp. dorei*	G5T5?	N5	S3			
Crawe's Sedge	*Carex crawei*	G5	N4N5	S3			
Crowfoot Violet	*Viola pedatifida*	G5	N4	S3			
Daisy Fleabane	*Erigeron strigosus var. strigosus*	G5T5	N5	S3			
Dry Goosefoot	*Chenopodium desiccatum*	G5	N3	S3			
Hairy Bugseed	*Corispermum villosum*	G4?	N4	S2			
Hooker's Bugseed	*Corispermum hookeri var. hookeri*	G4G5T4T5	N4N5	S2			
Louisiana Broom-rape	*Orobanche ludoviciana*	G5	N3	S3			
Mingan Moonwort	*Botrychium minganense*	G5	N5	S1			
Mucronate Blue-eyed-grass	*Sisyrinchium mucronatum*	G5	N4	S3			
Nevada Bulrush	*Amphiscirpus nevadensis*	G4	N4	S3			
Northern Blue-eyed-grass	*Sisyrinchium septentrionale*	G4	N4	S3			
Pale Bulrush	*Scirpus pallidus*	G5	N4	S3			
Pallas' Bugseed	*Corispermum pallasii*	G4?	N4	S2			
Plains Rough Fescue	*Festuca hallii*	G5	N5	S3			
Porcupine Sedge	*Carex hystericina*	G5	N5	S3			
Red Elderberry	*Sambucus racemosa ssp. pubens*	G5T5	N5	S2			
Red-stemmed Cinquefoil	*Potentilla rubricaulis*	G4G5	N4N5	S3			

Category: Vascular Plant

Common Name	Scientific Name:	G Rank	N Rank	S Rank	COSEWIC	SARA Status	Wild Species at Risk Regulations
Rocky Mountain Sedge	*Carex saximontana*	G5	N3	S3			
Sand-dune Wheatgrass	*Elymus lanceolatus ssp. psammophilus*	G5T3	NNR	S2			
Sandhills Cinquefoil	*Potentilla lasiodonta*	G3	N3	S2			
Small Lupine	*Lupinus pusillus ssp. pusillus*	G5T5	N3	S3			
Smooth Goosefoot	*Chenopodium subglabrum*	G3G4	N3	S3	Threatened	Threatened	
Smooth Hawk's-beard	*Crepis runcinata ssp. hispidulosa*	G5T4	NU	S1			
Soft Wild Bergamot	*Monarda fistulosa var. mollis*	G5T5?	NNR	S3			
Southern Milk-vetch	*Astragalus australis var. glabriusculus*	G5TNR	NNR	S3			
Tall Bur-marigold	*Bidens frondosa*	G5	N5	S3			
Upright Narrow-leaved Pondweed	*Potamogeton strictifolius*	G5	N5	S3			
Water Pimpernel	*Samolus parviflorus*	G5	N4	SH			

Category: Vertebrate Animal

Common Name	Scientific Name:	G Rank	N Rank	S Rank	COSEWIC	SARA Status	Wild Species at Risk Regulations
Bank Swallow	*Riparia riparia*	G5	N5B,N5M	S4B,S5M	Threatened	Threatened	
Barn Swallow	*Hirundo rustica*	G5	N3N4B, N3N4M	S4B	Special Concern	Threatened	
Bobolink	*Dolichonyx oryzivorus*	G5	N5B, N4N5M	S5B	Special Concern	Threatened	
Canada Warbler	*Cardellina canadensis*	G5	N4B,N3M	S4B,S3M	Special Concern	Threatened	
Clark's Grebe	*Aechmophorus clarkii*	G5	N1N2B	S1B			
Common Nighthawk	*Chordeiles minor*	G5	N4B,N3M	S4B	Special Concern	Special Concern	
Cooper's Hawk	*Accipiter cooperii*	G5	N5B,N5N, N4N5M	S4B,S2N, S2M	Not at Risk		
Glaucous Gull	*Larus hyperboreus*	G5	N4N5B, N5N,N5M	S2N			
Golden Eagle	*Aquila chrysaetos*	G5	N4N5B, N4N5N	S3B,S3N, S4M	Not at Risk		
Harris's Sparrow	*Zonotrichia querula*	G5	N4B,NUN, N5M	SUB,S5M	Special Concern	Special Concern	
Horned Grebe	*Podiceps auritus*	G5	N5B,N5N, N5M	S5B	Special Concern	Special Concern	
Little Brown Myotis	*Myotis lucifugus*	G3G4	N2N4B, NNRN, NNRM	S4B,S4N	Endangered	Endangered	
Loggerhead Shrike	*Lanius ludovicianus excubitorides*	G4T4	N3B	S3B	Threatened	Threatened	
Northern Leopard Frog	*Lithobates pipiens*	G5	N5	S3	Special Concern	Special Concern	
Olive-backed Pocket Mouse	*Perognathus fasciatus*	G5	N3N4	S3			
Olive-sided Flycatcher	*Contopus cooperi*	G4	N4B,N3M	S4B	Special Concern	Special Concern	
Osprey	*Pandion haliaetus*	G5	N5B	S3B			
Pileated Woodpecker	*Dryocopus pileatus*	G5	N5	S3			
Pine Grosbeak	*Pinicola enucleator*	G5	N5B,N5N, N5M	S2B,S4N			
Piping Plover	*Charadrius melodus circumcinctus*	G3T3	N3B	S3B	Endangered	Endangered	Endangered
Red-headed Woodpecker	*Melanerpes erythrocephalus*	G5	N4B,N3M	S1B	Endangered	Endangered	
Sharp-tailed Grouse	*Tympanuchus phasianellus*	G5	N5	S5			
Snapping Turtle	*Chelydra serpentina*	G5	N4	S3	Special Concern	Special Concern	
Sprague's Pipit	*Anthus spragueii*	G3G4	N3N4B, N3N4M	S3B	Threatened	Threatened	

Category: Vertebrate Animal

Common Name	Scientific Name:	G Rank	N Rank	S Rank	COSEWIC	SARA Status	Wild Species at Risk Regulations
Townsend's Solitaire	*Myadestes townsendi*	G5	N5B,NUN, N5M	S3N			
Turkey Vulture	*Cathartes aura*	G5	N5B,N5M	S3B			
Western Grebe	*Aechmophorus occidentalis*	G5	N3N4B, N2N	S3B	Special Concern	Special Concern	
Whooping Crane	*Grus americana*	G1	N1B	SXB,S1M	Endangered	Endangered	Endangered
Yellow-Breasted Chat	*Icteria virens auricollis*	G5T4T5	N3N4B	S3B	Not at Risk		

Expected Species

"Expected" is based on a modelled prediction if a species might occur in areas based upon developed statistical relationships between local and landscape characteristics and species presence. Models utilized by this report have only been created in the prairie ecozone for a selection of species. The boreal plain, boreal shield and taiga shield will not return any expected species results. Models are not a substitute for on the ground surveys to determine species presence.

Species Predictive Models

Category: Invertebrate Animal

Common Name	Scientific Name:	G Rank	N Rank	S Rank	COSEWIC	SARA Status	Wild Species at Risk Regulations
Monarch	*Danaus plexippus plexippus*	G4T3	N3B,NNRM	S2B,SNRM	Endangered	Special Concern	

Category: Vascular Plant

Common Name	Scientific Name:	G Rank	N Rank	S Rank	COSEWIC	SARA Status	Wild Species at Risk Regulations
Hairy Prairie Clover	*Dalea villosa var. villosa*	G5T5	N2N3	S2	Special Concern	Special Concern	Endangered
Slender Mouse-ear-cress	*Crucihimalaya virgata*	G3	N2	S1	Threatened	Threatened	Threatened
Small-flowered Sand-verbena	*Tripterocalyx micranthus*	G5	N2	S2	Endangered	Endangered	Endangered
Smooth Goosefoot	*Chenopodium subglabrum*	G3G4	N3	S3	Threatened	Threatened	

Category: Vertebrate Animal

Common Name	Scientific Name:	G Rank	N Rank	S Rank	COSEWIC	SARA Status	Wild Species at Risk Regulations
American Badger	*Taxidea taxus taxus*	G5T5	N4	S3	Special Concern	Special Concern	
Baird's Sparrow	*Centronyx bairdii*	G4	N4B,N4M	S4B	Special Concern	Special Concern	
Bank Swallow	*Riparia riparia*	G5	N5B,N5M	S4B,S5M	Threatened	Threatened	
Bobolink	*Dolichonyx oryzivorus*	G5	N5B, N4N5M	S5B	Special Concern	Threatened	
Burrowing Owl	*Athene cunicularia*	G4	N1N2B, N1N2M	S2B	Endangered	Endangered	Endangered
Chestnut-collared Longspur	*Calcarius ornatus*	G5	N3B,N3M	S3B	Endangered	Threatened	
Common Nighthawk	*Chordeiles minor*	G5	N4B,N3M	S4B	Special Concern	Special Concern	
Ferruginous Hawk	*Buteo regalis*	G4	N3B,N3N, NUM	S3B	Special Concern	Threatened	
Golden Eagle	*Aquila chrysaetos*	G5	N4N5B, N4N5N	S3B,S3N, S4M	Not at Risk		
Horned Grebe	*Podiceps auritus*	G5	N5B,N5N, N5M	S5B	Special Concern	Special Concern	
Loggerhead Shrike	*Lanius ludovicianus excubitorides*	G4T4	N3B	S3B	Threatened	Threatened	
Long-billed Curlew	*Numenius americanus*	G5	N4B,N4M	S3B	Special Concern	Special Concern	
Northern Harrier	*Circus hudsonius*	G5	N5B,N4N	S4B	Not at Risk		
Northern Leopard Frog	*Lithobates pipiens*	G5	N5	S3	Special Concern	Special Concern	
Piping Plover	*Charadrius melodus circumcinctus*	G3T3	N3B	S3B	Endangered	Endangered	Endangered
Prairie Falcon	*Falco mexicanus*	G5	N3B,N4N, N3M	S3B,S3N	Not at Risk		
Short-eared Owl	*Asio flammeus*	G5	N4B,N3N, N4M	S3B,S2N	Threatened	Special Concern	

Category: Vertebrate Animal

Common Name	Scientific Name:	G Rank	N Rank	S Rank	COSEWIC	SARA Status	Wild Species at Risk Regulations
Sprague's Pipit	*Anthus spragueii*	G3G4	N3N4B, N3N4M	S3B	Threatened	Threatened	

Fish Species by Watershed

All fish species expected to be in any watershed that intersects the area searched are provided and their presence in the direct project area will depend on habitat.

Watershed: South Saskatchewan River

Common Name	Scientific Name:	G Rank	N Rank	S Rank	COSEWIC	SARA Status	Wild Species at Risk Regulations
Blacknose Dace	*Rhinichthys obtusus*	G5	N5	S3			
Brook Stickleback	*Culaea inconstans*	G5	N5	S5			
Brook Trout	*Salvelinus fontinalis*	G5	N5B,N5N,	SNA			
Burbot	*Lota lota*	G5	N5	S5			
Cisco	*Coregonus artedi*	G5	N5B,N5N,	S5			
Common Shiner	*Luxilus cornutus*	G5	N5	S3			
Emerald Shiner	*Notropis atherinoides*	G5	N5	S5			
Fathead Minnow	*Pimephales promelas*	G5	N5	S5			
Finescale Dace	*Chrosomus neogaeus*	G5	N5	S4			
Flathead Chub	*Platygobio gracilis*	G5	N5	S3			
Goldeye	*Hiodon alosoides*	G5	N5	S4			
Iowa Darter	*Etheostoma exile*	G5	N5	S5			
Johnny Darter	*Etheostoma nigrum*	G5	N5	S5			
Lake Chub	*Couesius plumbeus*	G5	N5	S5			
Lake Sturgeon	*Acipenser fulvescens*	G3G4	N3	S2	Endangered		
Lake Trout	*Salvelinus namaycush*	G5	N5	S5			
Lake Whitefish	*Coregonus clupeaformis*	G5	N5B,N5N,	S5	Not at Risk		
Logperch	*Percina caprodes*	G5	N5	S5			
Longnose Dace	*Rhinichthys cataractae*	G5	N5	S5			
Longnose Sucker	*Catostomus catostomus*	G5	N5	S5			
Mooneye	*Hiodon tergisus*	G5	N5	S3			
Ninespine Stickleback	*Pungitius pungitius*	G5	N5B,N5N,	S5			
Northern Pike	*Esox lucius*	G5	N5	S5			
Pearl Dace	*Margariscus nachtriebi*	G5	N5	S5			
Quillback	*Carpiodes cyprinus*	G5	N5	S4			
Rainbow Trout	*Oncorhynchus mykiss*	G5	N5B,N5N,	SNA			
River Shiner	*Notropis blennius*	G5	N5	S3			
Sauger	*Sander canadensis*	G5	N5	S5			
Shorthead Redhorse	*Moxostoma macrolepidotum*	G5	N5	S4			
Silver Redhorse	*Moxostoma anisurum*	G5	N5	S4			
Slimy Sculpin	*Cottus cognatus*	G5	N5	S4			
Spoonhead Sculpin	*Cottus ricei*	G5	N5	S5	Not at Risk		
Spottail Shiner	*Notropis hudsonius*	G5	N5	S5			
Trout-perch	*Percopsis omiscomaycus*	G5	N5	S5			
Walleye	*Sander vitreus*	G5	N5	S5			
White Sucker	*Catostomus commersonii*	G5	N5	S4			
Yellow Perch	*Perca flavescens*	G5	N5	S5			

Whooping Crane Corridor 50% Core Area

Whooping Crane Corridor 95% Core Area

Whooping Crane Corridor 75% Core Area

Species with Critical Habitat Present

This dataset displays the geographic areas within which federal Critical Habitat for species at risk listed on Schedule 1 of the federal Species at Risk Act (SARA) occurs in Saskatchewan. Please be aware that not all of the area within these boundaries is necessarily Critical Habitat. To determine if a specific area is Critical Habitat and if your activity might be considered "destruction" of Critical Habitat, other information available in each individual species' Recovery documents (http://www.sararegistry.gc.ca) need to be considered, including biophysical attributes and activities likely to result in destruction of Critical Habitat.

Note that recovery documents (and therefore Critical Habitat) may be amended from time to time. Species are added as the data becomes ready, which may occur after the recovery document has been posted on the SAR Public Registry. Although HABISask will try to provide the latest data, the SAR Public Registry should always be considered as the official source for Critical Habitat information.

Common Name	Scientific Name:	G Rank	N Rank	S Rank	COSEWIC	SARA Status	Wild Species at Risk Regulations
No Critical Habitat found							

Proposed Critical Habitat Present

This section identifies federally proposed critical habitat that is up for consultation as per the information contained within the federal recovery strategies developed under the federal Species at Risk Act (SARA). This information on location of critical habitat is intended for reference by landowners and/or lease holders. Shapefiles or additional maps of critical habitat can be obtained by contacting Environment and Climate Change Canada at ec.leprpn-sarapnr.ec@canada.ca.

Common Name	Scientific Name:	G Rank	N Rank	S Rank	COSEWIC	SARA Status	Wild Species at Risk Regulations
Gibson's Big Sand Tiger Beetle	*Cicindela formosa gibsoni*	G5T3	N3	S3	Threatened	Threatened	

Managed Areas

Managed areas are a diverse collection of lands and waters on which the conservation of biodiversity and ecosystem function are among the goals of the land management programs. Each of the unique or sensitive landscapes, within the network of managed areas, have some level of protection or activity restrictions placed on them by legislation, agreement or policy. These lands include provincial and national parks, ecological reserves, wildlife lands, game preserves, conservation easements and other privately held stewardship lands.

Provincial Park

Nothing Found

Ecological Reserve

Nothing Found

Recreation Site

Nothing Found

Ramsar Wetland

Nothing Found

Game Preserve

Nothing Found

Reservoir Development Area

Nothing Found

National Wildlife Area

Nothing Found

Representative Area Ecological Reserve

Nothing Found

Pasture Boundary

Dundurn #2

Wildlife Habitat Protection Act (WHPA)

Yes

Fish & Wildlife Development Fund (FWDF)

Nothing Found

Migratory Bird Sanctuary

Nothing Found

Wildlife Refuge

Nothing Found

Conservation Easement

Yes

Crown Conservation Easement

Nothing Found

Project Screening Report

Rare and Endangered Species Occurrences

The absence of information provided by the Saskatchewan Conservation Data Centre (SKCDC) does not categorically mean the absence of sensitive species or features. The quantity and quality for data collected by the SKCDC are dependent on the research and observations of many individuals and organizations. SKCDC reports summarize the existing natural heritage information, known to the SKCDC, at the time of the request.

SKCDC data should never be regarded as final statements on the elements or areas being considered, nor should they be substituted for on-site surveys required for environmental assessments. The user therefore acknowledges that the absence of data may indicate that the project area has not been surveyed, rather than confirm that the area lacks natural heritage resources.

Occurrence ID: 14572 **First Observation:** 1988
Occurrence Class: Vertebrate Animal **Last Observation:** 2016
Scientific Name: Charadrius melodus circumcinctus
Common Name: Piping Plover
Occurrence Rank: BC - Good or fair estimated viability
General Description:
Occurrence Data: International Piping Plover Census - 2016: 17 adults including 7 pairs were seen. 2011: No Piping Plovers seen. 2006: 18 adults including 3 pairs were observed 2001: 7 adults including 1 pair were observed 1996: One pair of adults was observed C.White et al. SWA - 2005: 37 adults including 12 pairs were observed CWS - 2004: 32 adults and 4 nests were observed P.Goossen et al. 2000 - 1997: 4 adults were observed E.Beveridge SERM - 1993: 20 adults including 5 pairs were observed Harris and Lamont 1990 - 1990: 3 adults were observed Purdy and Weichel 1988 - 1988: 44 adults including 17 pairs were observed S.McAdam - 1991: 1 adult was observed
Directions: Observations occurred along the South Saskatchewan River from south of Outlook to south of Saskatoon

---

Occurrence ID: 9999101544 **First Observation:** 2018-08-09
Occurrence Class: Vertebrate Animal **Last Observation:** 2018-08-09
Scientific Name: Grus americana
Common Name: Whooping Crane
Occurrence Rank:
General Description: 1 Adult(s) (Unknown Sex); Breeding Bird Status: Migrant; (2018)
Occurrence Data:
Directions: SOUTH SASKATCHEWAN RIVER OFF VALLEY ROAD.

Occurrence ID: 9999101618 **First Observation:** 2015-05-05
Occurrence Class: Vertebrate Animal **Last Observation:** 2015-05-05
Scientific Name: Grus americana
Common Name: Whooping Crane
Occurrence Rank:
General Description: 2 Adult(s) (Unknown Sex); 0 Juvenile(s); Breeding Bird Status: Migrant; (2015)
Occurrence Data:
Directions: S OF VALLEY ROAD, NEAR "BARE-ASS BEACH"

Occurrence ID: 9999101740 **First Observation:** 2016-10-13
Occurrence Class: Vertebrate Animal **Last Observation:** 2016-10-13
Scientific Name: Grus americana
Common Name: Whooping Crane
Occurrence Rank:
General Description: 18 Adult(s) (Unknown Sex); 0 Juvenile(s); Breeding Bird Status: Migrant; (2016)
Occurrence Data:
Directions: 6 MI S OF SASKATOON

Occurrence ID: 9999102451 **First Observation:** 2017-08-02
Occurrence Class: Vertebrate Animal **Last Observation:** 2017-08-02
Scientific Name: Myotis lucifugus
Common Name: Little Brown Myotis
Occurrence Rank:
General Description: 12 individuals captured by mist net: 5 adult females and 7 adult males (2017)
Occurrence Data:
Directions:

Occurrence ID: 9999103544 **First Observation:** 1976-10-20
Occurrence Class: Vertebrate Animal **Last Observation:** 1976-10-20
Scientific Name: Grus americana
Common Name: Whooping Crane
Occurrence Rank:
General Description: 5 Adult(s) (Unknown Sex); 0 Juvenile(s); Breeding Bird Status: Migrant; (1976)
Occurrence Data:
Directions: NEAR WILLOWS

Occurrence ID: 9999103614 **First Observation:** 1996-04-25
Occurrence Class: Vertebrate Animal **Last Observation:** 1996-04-25
Scientific Name: Grus americana
Common Name: Whooping Crane
Occurrence Rank:
General Description: 2 Adult(s) (Unknown Sex); 0 Juvenile(s); Breeding Bird Status: Migrant; (1996)
Occurrence Data:
Directions: 16KM S OF SASKATOON

Occurrence ID: 9999103616 **First Observation:** 1996-04-28
Occurrence Class: Vertebrate Animal **Last Observation:** 1996-04-28
Scientific Name: Grus americana
Common Name: Whooping Crane
Occurrence Rank:
General Description: 8 Adult(s) (Unknown Sex); 0 Juvenile(s); Breeding Bird Status: Migrant; (1996)
Occurrence Data:
Directions: 13KM S OF SASKATOON

Occurrence ID: 9999103618 **First Observation:** 1996-04-29
Occurrence Class: Vertebrate Animal **Last Observation:** 1996-04-29
Scientific Name: Grus americana
Common Name: Whooping Crane
Occurrence Rank:
General Description: 1 Adult(s) (Unknown Sex); 0 Juvenile(s); Breeding Bird Status: Migrant; (1996)
Occurrence Data:
Directions: 8KM S OF FLORAL

Occurrence ID: 9999103620 **First Observation:** 1996-05-03
Occurrence Class: Vertebrate Animal **Last Observation:** 1996-05-03
Scientific Name: Grus americana
Common Name: Whooping Crane
Occurrence Rank:
General Description: 30 Adult(s) (Unknown Sex); 0 Juvenile(s); Breeding Bird Status: Migrant; (1996)
Occurrence Data:
Directions: SASKATOON (CHIEF WHITECAP PARK SOUTH SK RIVER)

Occurrence ID: 9999103635 **First Observation:** 1996-09-21
Occurrence Class: Vertebrate Animal **Last Observation:** 1996-09-21
Scientific Name: Grus americana
Common Name: Whooping Crane
Occurrence Rank:
General Description: 5 Adult(s) (Unknown Sex); 0 Juvenile(s); Breeding Bird Status: Migrant; (1996)
Occurrence Data:
Directions: 8KM N OF BEAVER CREEK CONSERVATION AREA (HWY219)

Occurrence ID: 9999103655 **First Observation:** 2005-10-22
Occurrence Class: Vertebrate Animal **Last Observation:** 2005-10-22
Scientific Name: Grus americana
Common Name: Whooping Crane
Occurrence Rank:
General Description: 1 Adult(s) (Unknown Sex); 0 Juvenile(s); Breeding Bird Status: Migrant; (2005)
Occurrence Data:
Directions: CHIEF WHITECAP PARK

Occurrence ID: 9999103671 **First Observation:** 2010-08-31
Occurrence Class: Vertebrate Animal **Last Observation:** 2010-08-31
Scientific Name: Grus americana
Common Name: Whooping Crane
Occurrence Rank:
General Description: 1 Adult(s) (Unknown Sex); Breeding Bird Status: Migrant; (2010)
Occurrence Data:
Directions: BEAVER CREEK

Occurrence ID: 9999103676 **First Observation:** 2010-10-18
Occurrence Class: Vertebrate Animal **Last Observation:** 2010-10-18
Scientific Name: Grus americana
Common Name: Whooping Crane
Occurrence Rank:
General Description: Breeding Bird Status: Migrant; (2010)
Occurrence Data:
Directions: S OF SASKATOON

Occurrence ID: 9999103768 **First Observation:** 2013-05-02
Occurrence Class: Vertebrate Animal **Last Observation:** 2013-05-02
Scientific Name: Grus americana
Common Name: Whooping Crane
Occurrence Rank:
General Description: 7 Adult(s) (Unknown Sex); 0 Juvenile(s); Breeding Bird Status: Migrant; (2013)
Occurrence Data:
Directions: 1.2KM E OF VALLEY RD

Occurrence ID: 9999103964 **First Observation:** 1980-04-27
Occurrence Class: Vertebrate Animal **Last Observation:** 1980-04-27
Scientific Name: Grus americana
Common Name: Whooping Crane
Occurrence Rank:
General Description: 2 Adult(s) (Unknown Sex); 0 Juvenile(s); Breeding Bird Status: Migrant; (1980)
Occurrence Data:
Directions: SASKATOON (CIRCLE DR AND PRESTON AVE)

Occurrence ID: 9999104075 **First Observation:** 1986-08-10
Occurrence Class: Vertebrate Animal **Last Observation:** 1986-08-10
Scientific Name: Grus americana
Common Name: Whooping Crane
Occurrence Rank:
General Description: 1 Adult(s) (Unknown Sex); 0 Juvenile(s); Breeding Bird Status: Migrant; (1986)
Occurrence Data:
Directions: 8MI S OF SASKATOON (W SIDE OF HWY11)

Occurrence ID: 9999104140 **First Observation:** 1988-04-12
Occurrence Class: Vertebrate Animal **Last Observation:** 1988-04-12
Scientific Name: Grus americana
Common Name: Whooping Crane
Occurrence Rank:
General Description: 5 Adult(s) (Unknown Sex); 0 Juvenile(s); Breeding Bird Status: Migrant; (1988)
Occurrence Data:
Directions: 3MI E 0.5MI S OF FLORAL

Occurrence ID: 9999104307 **First Observation:** 1990-05-21
Occurrence Class: Vertebrate Animal **Last Observation:** 1990-05-21
Scientific Name: Grus americana
Common Name: Whooping Crane
Occurrence Rank:
General Description: 2 Adult(s) (Unknown Sex); 0 Juvenile(s); Breeding Bird Status: Migrant; (1990)
Occurrence Data:
Directions: 2MI W 0.75MI S OF CLAVET

Occurrence ID: 9999104408 **First Observation:** 1992-10-14
Occurrence Class: Vertebrate Animal **Last Observation:** 1992-10-14
Scientific Name: Grus americana
Common Name: Whooping Crane
Occurrence Rank:
General Description: 13 Adult(s) (Unknown Sex); 0 Juvenile(s); Breeding Bird Status: Migrant; (1992)
Occurrence Data:
Directions: 12KM S OF SASKATOON

Occurrence ID: 9999104529 **First Observation:** 1996-10-28
Occurrence Class: Vertebrate Animal **Last Observation:** 1996-10-28
Scientific Name: Grus americana
Common Name: Whooping Crane
Occurrence Rank:
General Description: 3 Adult(s) (Unknown Sex); 2 Juvenile(s); Breeding Bird Status: Migrant; (1996)
Occurrence Data:
Directions: 7KM S OF SASKATOON (SOUTH SK RIVER)

Occurrence ID: 9999104749 **First Observation:** 2003-10-12
Occurrence Class: Vertebrate Animal **Last Observation:** 2003-10-12
Scientific Name: Grus americana
Common Name: Whooping Crane
Occurrence Rank:
General Description: 2 Adult(s) (Unknown Sex); 0 Juvenile(s); Breeding Bird Status: Migrant; (2003)
Occurrence Data:
Directions: 4MI NE OF PIKE LAKE

Occurrence ID: 9999104836 **First Observation:** 2005-10-24
Occurrence Class: Vertebrate Animal **Last Observation:** 2005-10-24
Scientific Name: Grus americana
Common Name: Whooping Crane
Occurrence Rank:
General Description: 2 Adult(s) (Unknown Sex); 1 Juvenile(s); Breeding Bird Status: Migrant; (2005)
Occurrence Data:
Directions: E SIDE OF SASKATOON

Occurrence ID: 9999134896 **First Observation:** 2021-06-08
Occurrence Class: Vertebrate Animal **Last Observation:** 2021-06-08
Scientific Name: Melanerpes erythrocephalus
Common Name: Red-headed Woodpecker
Occurrence Rank:
General Description: 1 bird (2021)
Occurrence Data:
Directions: Chief Whitecap Park

Occurrence ID: 9999134897 **First Observation:** 2021-06-09
Occurrence Class: Vertebrate Animal **Last Observation:** 2021-06-09
Scientific Name: Melanerpes erythrocephalus
Common Name: Red-headed Woodpecker
Occurrence Rank:
General Description: 1 bird (2021)
Occurrence Data:
Directions: Chief Whitecap Park

Occurrence ID: 12610 **First Observation:** 2002-07-16
Occurrence Class: Vertebrate Animal **Last Observation:** 2018-09-04
Scientific Name: Lithobates pipiens
Common Name: Northern Leopard Frog
Occurrence Rank: E - Verified extant (viability not assessed)
General Description: Leopard frog was seen along the margin of Beaver Creek in sedges. Area sandy and some parts of creek steep-banked, but this area allowed access from the water.
Occurrence Data: 1 adult and 4 young (2002); 1 individual observed (2006); Multiple individuals observed (2010); 7 individuals observed (2011); 1 adult (2012); Approximately 25 observed (2013); 2 observed (2015); 1 Unknown Sex/Age (2017); 10 Unknown Sex/Age (2018)
Directions: South of Saskatoon along Highway 219 at Beaver Creek crossing. UTM (NAD83, Zone13): EASTING: 382882 NORTHING: 5760069. LEGAL LAND DESC: TWP: 35, RGE: 5, W: 3 M, SECTIONS: 6.

Occurrence ID: 17554 **First Observation:** 2018
Occurrence Class: Vertebrate Animal **Last Observation:** 2018
Scientific Name: Chelydra serpentina
Common Name: Snapping Turtle
Occurrence Rank: E - Verified extant (viability not assessed)
General Description:
Occurrence Data: Species detected (2018)
Directions: Beaver Creek Conservation Area

Occurrence ID: 17800 **First Observation:** 2014-09-06
Occurrence Class: Vertebrate Animal **Last Observation:** 2014-09-06
Scientific Name: Lithobates pipiens
Common Name: Northern Leopard Frog
Occurrence Rank: E - Verified extant (viability not assessed)
General Description:
Occurrence Data: Species detected (2014)
Directions: Saskatoon, SK, Canada

Occurrence ID: 17801 **First Observation:** 2013-08-19
Occurrence Class: Vertebrate Animal **Last Observation:** 2019-09-07
Scientific Name: Lithobates pipiens
Common Name: Northern Leopard Frog
Occurrence Rank: E - Verified extant (viability not assessed)
General Description:
Occurrence Data: 18 observed (2013); 19 Unknown Sex/Age (2017); 218 Unknown Sex/Age (2018); Species detected (2019).
Directions: South of Saskatoon along the South Saskatchewan river.

Occurrence ID: 17802 **First Observation:** 2013-08-19
Occurrence Class: Vertebrate Animal **Last Observation:** 2021-09-12
Scientific Name: Lithobates pipiens
Common Name: Northern Leopard Frog
Occurrence Rank: E - Verified extant (viability not assessed)
General Description:
Occurrence Data: 3 observed (2013); 2 observed (2015); 18 Unknown Sex/Age (2017); 1 Unknown Sex/Age; (2018); 30 Tadpole (2020); 3 observed (2021)
Directions: South of Saskatoon along the South Saskatchewan river.

Occurrence ID: 17942 **First Observation:** 2007-10-06
Occurrence Class: Vertebrate Animal **Last Observation:** 2016-10-14
Scientific Name: Zonotrichia querula
Common Name: Harris's Sparrow
Occurrence Rank: E - Verified extant (viability not assessed)
General Description:
Occurrence Data: 2007: 1 adult observed in fall over 2 weeks 2011: 1 adult observed in fall over 1 month, 4 adults banded 2012: 1 adult observed in fall, 10 adults banded 2013: 4 adults in fall, 8 adults banded 2014: 3 adults in fall, 16 adults banded 2015: 1 adult in spring, 1 adult banded 2016: 1 adult in spring, 20 adults in fall, 6 adults observed
Directions: Saskatoon

Occurrence ID: 23690 **First Observation:** 2017-06-28
Occurrence Class: Vertebrate Animal **Last Observation:** 2017-06-28
Scientific Name: Chordeiles minor
Common Name: Common Nighthawk
Occurrence Rank: E - Verified extant (viability not assessed)
General Description:
Occurrence Data: 1 female and 2 eggs in nest on ground (2017)
Directions: Beaver Creek in the North Prairie

Occurrence ID: 24106 **First Observation:** 2018-07-01
Occurrence Class: Vertebrate Animal **Last Observation:** 2018-07-01
Scientific Name: Podiceps auritus
Common Name: Horned Grebe
Occurrence Rank: E - Verified extant (viability not assessed)
General Description:
Occurrence Data: 6 Adult(s) Unknown Sex; Breeding Bird Status: AE; Nest/Burrow/Den; (2018)
Directions: Clarence Ave at Eldorado Lane wtlds

Occurrence ID: 999942040 **First Observation:** 2013
Occurrence Class: Vertebrate Animal **Last Observation:** 2013
Scientific Name: Podiceps auritus
Common Name: Horned Grebe
Occurrence Rank:
General Description: 1 grebe observed, 2013
Occurrence Data:
Directions:

Occurrence ID: 999987356 **First Observation:** 2012-05-17
Occurrence Class: Vertebrate Animal **Last Observation:** 2012-05-17
Scientific Name: Podiceps auritus
Common Name: Horned Grebe
Occurrence Rank:
General Description: 6 Unknown Sex/Age; (2012)
Occurrence Data:
Directions:

Occurrence ID: 999989069 **First Observation:** 2017-05-25
Occurrence Class: Vertebrate Animal **Last Observation:** 2017-05-25
Scientific Name: Podiceps auritus
Common Name: Horned Grebe
Occurrence Rank:
General Description: 2 Adult(s) (Unknown Sex); Breeding Bird Status: P; (2017)
Occurrence Data:
Directions:

Occurrence ID: 999989088 **First Observation:** 2017-06-07
Occurrence Class: Vertebrate Animal **Last Observation:** 2017-06-07
Scientific Name: Podiceps auritus
Common Name: Horned Grebe
Occurrence Rank:
General Description: 1 Adult(s) (Unknown Sex); Breeding Bird Status: H; (2017)
Occurrence Data:
Directions:

Occurrence ID: 999989103 **First Observation:** 2017-06-19
Occurrence Class: Vertebrate Animal **Last Observation:** 2017-06-19
Scientific Name: Podiceps auritus
Common Name: Horned Grebe
Occurrence Rank:
General Description: 1 Adult(s) (Unknown Sex); Breeding Bird Status: S; (2017)
Occurrence Data:
Directions:

Occurrence ID: 999989107 **First Observation:** 2017-06-20
Occurrence Class: Vertebrate Animal **Last Observation:** 2017-06-20
Scientific Name: Chordeiles minor
Common Name: Common Nighthawk
Occurrence Rank:
General Description: 1 Unknown Sex/Age; Breeding Bird Status: H; (2017)
Occurrence Data:
Directions:

Occurrence ID: 999989108 **First Observation:** 2017-06-07
Occurrence Class: Vertebrate Animal **Last Observation:** 2017-06-07
Scientific Name: Chordeiles minor
Common Name: Common Nighthawk
Occurrence Rank:
General Description: 1 Unknown Sex/Age; Breeding Bird Status: H; (2017)
Occurrence Data:
Directions:

Occurrence ID: 999989109 **First Observation:** 2017-06-20
Occurrence Class: Vertebrate Animal **Last Observation:** 2017-06-20
Scientific Name: Chordeiles minor
Common Name: Common Nighthawk
Occurrence Rank:
General Description: 1 Unknown Sex/Age; Breeding Bird Status: H; (2017)
Occurrence Data:
Directions:

Occurrence ID: 999991430 **First Observation:** 2017-06-29
Occurrence Class: Vertebrate Animal **Last Observation:** 2017-06-29
Scientific Name: Podiceps auritus
Common Name: Horned Grebe
Occurrence Rank:
General Description: 1 Adult(s) (Unknown Sex); (2017)
Occurrence Data:
Directions:

Occurrence ID: 9999118939 **First Observation:** 2011-08-28
Occurrence Class: Vertebrate Animal **Last Observation:** 2011-08-28
Scientific Name: Chordeiles minor
Common Name: Common Nighthawk
Occurrence Rank:
General Description: Species detected (2011)
Occurrence Data:
Directions: Chief Whitecap Park

Occurrence ID: 9999119385 **First Observation:** 2016-08-28
Occurrence Class: Vertebrate Animal **Last Observation:** 2016-08-28
Scientific Name: Contopus cooperi
Common Name: Olive-sided Flycatcher
Occurrence Rank:
General Description: Species detected (2016)
Occurrence Data:
Directions: Saskatoon--Holiday Park

Occurrence ID: 9999119400 **First Observation:** 2016-10-30
Occurrence Class: Vertebrate Animal **Last Observation:** 2016-10-30
Scientific Name: Aechmophorus occidentalis
Common Name: Western Grebe
Occurrence Rank:
General Description: Species detected (2016)
Occurrence Data:
Directions: Saskatoon--Queen Elizabeth Power Station

Occurrence ID: 9999120256 **First Observation:** 2010-09-16
Occurrence Class: Vertebrate Animal **Last Observation:** 2010-09-22
Scientific Name: Zonotrichia querula
Common Name: Harris's Sparrow
Occurrence Rank:
General Description: Species detected (2010)
Occurrence Data:
Directions: Nr Saskatoon, Saskatchewan

Occurrence ID: 9999128024 **First Observation:** 2017-06-18
Occurrence Class: Vertebrate Animal **Last Observation:** 2017-06-18
Scientific Name: Podiceps auritus
Common Name: Horned Grebe
Occurrence Rank:
General Description: 3 Adult(s) Unknown Sex; Breeding Bird Status: H; (2017)
Occurrence Data:
Directions: BLTE slough

Occurrence ID: 9999128030 **First Observation:** 2017-06-29
Occurrence Class: Vertebrate Animal **Last Observation:** 2017-06-29
Scientific Name: Podiceps auritus
Common Name: Horned Grebe
Occurrence Rank:
General Description: Breeding Bird Status: H; (2017)
Occurrence Data:
Directions: 09

Occurrence ID: 9999128044 **First Observation:** 2018-05-14
Occurrence Class: Vertebrate Animal **Last Observation:** 2018-05-14
Scientific Name: Podiceps auritus
Common Name: Horned Grebe
Occurrence Rank:
General Description: 2 Adult(s) Unknown Sex; Breeding Bird Status: H; (2018)
Occurrence Data:
Directions:

Occurrence ID: 9999128055 **First Observation:** 2018-06-20
Occurrence Class: Vertebrate Animal **Last Observation:** 2018-06-20
Scientific Name: Podiceps auritus
Common Name: Horned Grebe
Occurrence Rank:
General Description: 5 Adult(s) Unknown Sex; Breeding Bird Status: FY; (2018)
Occurrence Data:
Directions: RR 3052 twin sloughs

Occurrence ID: 9999128070 **First Observation:** 2019-05-05
Occurrence Class: Vertebrate Animal **Last Observation:** 2019-05-05
Scientific Name: Podiceps auritus
Common Name: Horned Grebe
Occurrence Rank:
General Description: 1 Adult(s) Unknown Sex; Breeding Bird Status: H; (2019)
Occurrence Data:
Directions: N terminus RR 3052 (S Preston Ave)

Occurrence ID: 9999128749 **First Observation:** 2020-05-29
Occurrence Class: Vertebrate Animal **Last Observation:** 2020-05-29
Scientific Name: Podiceps auritus
Common Name: Horned Grebe
Occurrence Rank:
General Description: 2 Adult(s) Unknown Sex; (2020)
Occurrence Data:
Directions: 13UCT86.09

Occurrence ID: 9999146580 **First Observation:** 2022-08-29
Occurrence Class: Vertebrate Animal **Last Observation:** 2022-08-29
Scientific Name: Lithobates pipiens
Common Name: Northern Leopard Frog
Occurrence Rank:
General Description: 1 Adult(s) Unknown Sex; (2022)
Occurrence Data:
Directions:

Occurrence ID: 12769 **First Observation:** 2006-04
Occurrence Class: Vertebrate Animal **Last Observation:** 2006-04
Scientific Name: Anthus spragueii
Common Name: Sprague's Pipit
Occurrence Rank: E - Verified extant (viability not assessed)
General Description:
Occurrence Data: Birds heard calling in pasture
Directions: Follow highway 219 South of Saskatoon approximately 15km, 2.5km past where Beaver Creek crosses highway Observation site is approximately 500m East from the highway

---

Occurrence ID: 13823 **First Observation:** 2008-06-09
Occurrence Class: Vertebrate Animal **Last Observation:** 2008-06-09
Scientific Name: Lanius ludovicianus excubitorides
Common Name: Loggerhead Shrike
Occurrence Rank: Not ranked
General Description:
Occurrence Data: 2008: 1 individual observed
Directions: SE-04-36-04-3

Occurrence ID: 23280 **First Observation:** 2019-07-08
Occurrence Class: Vertebrate Animal **Last Observation:** 2019-07-08
Scientific Name: Riparia riparia
Common Name: Bank Swallow
Occurrence Rank: E - Verified extant (viability not assessed)
General Description:
Occurrence Data: Breeding Bird Status: AE; Nest/Burrow/Den; (2019)
Directions: SE-2-35-5-3

Occurrence ID: 23462 **First Observation:** 2012-06-28
Occurrence Class: Vertebrate Animal **Last Observation:** 2012-06-28
Scientific Name: Hirundo rustica
Common Name: Barn Swallow
Occurrence Rank: E - Verified extant (viability not assessed)
General Description:
Occurrence Data: Nest/Burrow/Den; (2012)
Directions: Highway 219, btw hwy 15 and 44

Occurrence ID: 23977 **First Observation:** 2019-07-06
Occurrence Class: Vertebrate Animal **Last Observation:** 2019-07-06
Scientific Name: Riparia riparia
Common Name: Bank Swallow
Occurrence Rank: E - Verified extant (viability not assessed)
General Description:
Occurrence Data: 6 Adult(s) Unknown Sex; Breeding Bird Status: AE; Nest/Burrow/Den; (2019)
Directions: River south of Chief Whitecap Park

Occurrence ID: 999923985 **First Observation:** 2005
Occurrence Class: Vertebrate Animal **Last Observation:** 2005
Scientific Name: Lanius ludovicianus excubitorides
Common Name: Loggerhead Shrike
Occurrence Rank:
General Description: 5 - LOSH , SFS 2005 data
Occurrence Data:
Directions: NW-02-36-04-3

Occurrence ID: 999942031 **First Observation:** 2013
Occurrence Class: Vertebrate Animal **Last Observation:** 2013
Scientific Name: Hirundo rustica
Common Name: Barn Swallow
Occurrence Rank:
General Description: 1 bird observed (2013)
Occurrence Data:
Directions:

Occurrence ID: 999975284 **First Observation:** 2015
Occurrence Class: Vertebrate Animal **Last Observation:** 2018-07-15
Scientific Name: Lanius ludovicianus excubitorides
Common Name: Loggerhead Shrike
Occurrence Rank:
General Description: 1 Adult(s) (Unknown Sex); 1 Juvenile(s); (2018)
Occurrence Data:
Directions: SW-21-35-4-3

Occurrence ID: 999975362 **First Observation:** 2016-06-09
Occurrence Class: Vertebrate Animal **Last Observation:** 2016-06-09
Scientific Name: Lanius ludovicianus excubitorides
Common Name: Loggerhead Shrike
Occurrence Rank:
General Description: 1 Adults (Unknown Sex); (2016)
Occurrence Data:
Directions: NW-14-35-4-3

Occurrence ID: 999975491 **First Observation:** 2016-06-08
Occurrence Class: Vertebrate Animal **Last Observation:** 2016-06-08
Scientific Name: Anthus spragueii
Common Name: Sprague's Pipit
Occurrence Rank:
General Description: 3 Adults (Unknown Sex); (2016)
Occurrence Data:
Directions:

Occurrence ID: 999975492 **First Observation:** 2016-06-08
Occurrence Class: Vertebrate Animal **Last Observation:** 2016-06-08
Scientific Name: Hirundo rustica
Common Name: Barn Swallow
Occurrence Rank:
General Description: 2 Adults (Unknown Sex); (2016)
Occurrence Data:
Directions:

Occurrence ID: 999975493 **First Observation:** 2016-06-08
Occurrence Class: Vertebrate Animal **Last Observation:** 2016-06-08
Scientific Name: Riparia riparia
Common Name: Bank Swallow
Occurrence Rank:
General Description: 1 Adults (Unknown Sex); (2016)
Occurrence Data:
Directions:

Occurrence ID: 999975494 **First Observation:** 2016-06-08
Occurrence Class: Vertebrate Animal **Last Observation:** 2016-06-08
Scientific Name: Anthus spragueii
Common Name: Sprague's Pipit
Occurrence Rank:
General Description: 2 Adults (Unknown Sex); (2016)
Occurrence Data:
Directions:

Occurrence ID: 999975495 **First Observation:** 2016-06-08
Occurrence Class: Vertebrate Animal **Last Observation:** 2016-06-08
Scientific Name: Hirundo rustica
Common Name: Barn Swallow
Occurrence Rank:
General Description: 2 Adults (Unknown Sex); (2016)
Occurrence Data:
Directions:

Occurrence ID: 999987357 **First Observation:** 2012-05-17
Occurrence Class: Vertebrate Animal **Last Observation:** 2012-05-17
Scientific Name: Hirundo rustica
Common Name: Barn Swallow
Occurrence Rank:
General Description: 1 Unknown Sex/Age; (2012)
Occurrence Data:
Directions:

Occurrence ID: 999989061 **First Observation:** 2017-05-25
Occurrence Class: Vertebrate Animal **Last Observation:** 2017-05-25
Scientific Name: Hirundo rustica
Common Name: Barn Swallow
Occurrence Rank:
General Description: 1 Adult(s) (Unknown Sex); Breeding Bird Status: H; (2017)
Occurrence Data:
Directions:

Occurrence ID: 999989062 **First Observation:** 2017-05-25
Occurrence Class: Vertebrate Animal **Last Observation:** 2017-05-25
Scientific Name: Anthus spragueii
Common Name: Sprague's Pipit
Occurrence Rank:
General Description: 1 Adult(s) (Unknown Sex); Breeding Bird Status: S; (2017)
Occurrence Data:
Directions:

Occurrence ID: 999989063 **First Observation:** 2017-05-25
Occurrence Class: Vertebrate Animal **Last Observation:** 2017-05-25
Scientific Name: Anthus spragueii
Common Name: Sprague's Pipit
Occurrence Rank:
General Description: 1 Adult(s) (Unknown Sex); Breeding Bird Status: S; (2017)
Occurrence Data:
Directions:

Occurrence ID: 999989064 **First Observation:** 2017-05-25
Occurrence Class: Vertebrate Animal **Last Observation:** 2017-05-25
Scientific Name: Anthus spragueii
Common Name: Sprague's Pipit
Occurrence Rank:
General Description: 1 Adult(s) (Unknown Sex); Breeding Bird Status: S; (2017)
Occurrence Data:
Directions:

Occurrence ID: 999989065 **First Observation:** 2017-05-25
Occurrence Class: Vertebrate Animal **Last Observation:** 2017-05-25
Scientific Name: Anthus spragueii
Common Name: Sprague's Pipit
Occurrence Rank:
General Description: 1 Adult(s) (Unknown Sex); Breeding Bird Status: S; (2017)
Occurrence Data:
Directions:

Occurrence ID: 999989066 **First Observation:** 2017-05-25
Occurrence Class: Vertebrate Animal **Last Observation:** 2017-05-25
Scientific Name: Dolichonyx oryzivorus
Common Name: Bobolink
Occurrence Rank:
General Description: 1 Adult(s) (Unknown Sex); Breeding Bird Status: S; (2017)
Occurrence Data:
Directions:

Occurrence ID: 999989067 **First Observation:** 2017-05-25
Occurrence Class: Vertebrate Animal **Last Observation:** 2017-05-25
Scientific Name: Hirundo rustica
Common Name: Barn Swallow
Occurrence Rank:
General Description: 1 Adult(s) (Unknown Sex); Breeding Bird Status: H; (2017)
Occurrence Data:
Directions:

Occurrence ID: 999989068 **First Observation:** 2017-05-25
Occurrence Class: Vertebrate Animal **Last Observation:** 2017-05-25
Scientific Name: Lanius ludovicianus excubitorides
Common Name: Loggerhead Shrike
Occurrence Rank:
General Description: 1 Adult(s) (Unknown Sex); Breeding Bird Status: H; (2017)
Occurrence Data:
Directions:

Occurrence ID: 999989070 **First Observation:** 2017-05-25
Occurrence Class: Vertebrate Animal **Last Observation:** 2017-05-25
Scientific Name: Hirundo rustica
Common Name: Barn Swallow
Occurrence Rank:
General Description: 2 Adult(s) (Unknown Sex); Breeding Bird Status: H; (2017)
Occurrence Data:
Directions:

Occurrence ID: 999989071 **First Observation:** 2017-05-25
Occurrence Class: Vertebrate Animal **Last Observation:** 2017-05-25
Scientific Name: Dolichonyx oryzivorus
Common Name: Bobolink
Occurrence Rank:
General Description: 3 Adult(s) (Unknown Sex); Breeding Bird Status: H; (2017)
Occurrence Data:
Directions:

Occurrence ID: 999989072 **First Observation:** 2017-05-23
Occurrence Class: Vertebrate Animal **Last Observation:** 2017-05-23
Scientific Name: Anthus spragueii
Common Name: Sprague's Pipit
Occurrence Rank:
General Description: Species detected (2017)
Occurrence Data:
Directions:

Occurrence ID: 999989073 **First Observation:** 2017-05-23
Occurrence Class: Vertebrate Animal **Last Observation:** 2017-05-23
Scientific Name: Hirundo rustica
Common Name: Barn Swallow
Occurrence Rank:
General Description: 1 Adult(s) (Unknown Sex); Breeding Bird Status: S; (2017)
Occurrence Data:
Directions:

Occurrence ID: 999989074 **First Observation:** 2017-05-23
Occurrence Class: Vertebrate Animal **Last Observation:** 2017-05-23
Scientific Name: Anthus spragueii
Common Name: Sprague's Pipit
Occurrence Rank:
General Description: 1 Adult(s) (Unknown Sex); Breeding Bird Status: S; (2017)
Occurrence Data:
Directions:

Occurrence ID: 999989075 **First Observation:** 2017-05-27
Occurrence Class: Vertebrate Animal **Last Observation:** 2017-05-27
Scientific Name: Dolichonyx oryzivorus
Common Name: Bobolink
Occurrence Rank:
General Description: 1 Adult(s) (Unknown Sex); Breeding Bird Status: S; (2017)
Occurrence Data:
Directions:

Occurrence ID: 999989076 **First Observation:** 2017-05-27
Occurrence Class: Vertebrate Animal **Last Observation:** 2017-05-27
Scientific Name: Anthus spragueii
Common Name: Sprague's Pipit
Occurrence Rank:
General Description: 1 Adult(s) (Unknown Sex); Breeding Bird Status: S; (2017)
Occurrence Data:
Directions:

Occurrence ID: 999989077 **First Observation:** 2017-05-27
Occurrence Class: Vertebrate Animal **Last Observation:** 2017-05-27
Scientific Name: Anthus spragueii
Common Name: Sprague's Pipit
Occurrence Rank:
General Description: 1 Adult(s) (Unknown Sex); Breeding Bird Status: S; (2017)
Occurrence Data:
Directions:

Occurrence ID: 999989080 **First Observation:** 2017-05-27
Occurrence Class: Vertebrate Animal **Last Observation:** 2017-05-27
Scientific Name: Dolichonyx oryzivorus
Common Name: Bobolink
Occurrence Rank:
General Description: 1 Adult(s) (Unknown Sex); Breeding Bird Status: S; (2017)
Occurrence Data:
Directions:

Occurrence ID: 999989081 **First Observation:** 2017-05-27
Occurrence Class: Vertebrate Animal **Last Observation:** 2017-05-27
Scientific Name: Hirundo rustica
Common Name: Barn Swallow
Occurrence Rank:
General Description: 1 Adult(s) (Unknown Sex); Breeding Bird Status: H; (2017)
Occurrence Data:
Directions:

Occurrence ID: 999989082 **First Observation:** 2017-05-27
Occurrence Class: Vertebrate Animal **Last Observation:** 2017-05-27
Scientific Name: Hirundo rustica
Common Name: Barn Swallow
Occurrence Rank:
General Description: 1 Adult(s) (Unknown Sex); Breeding Bird Status: H; (2017)
Occurrence Data:
Directions:

Occurrence ID: 999989086 **First Observation:** 2017-06-08
Occurrence Class: Vertebrate Animal **Last Observation:** 2017-06-08
Scientific Name: Hirundo rustica
Common Name: Barn Swallow
Occurrence Rank:
General Description: 1 Adult(s) (Unknown Sex); Breeding Bird Status: X; (2017)
Occurrence Data:
Directions:

Occurrence ID: 999989087 **First Observation:** 2017-06-07
Occurrence Class: Vertebrate Animal **Last Observation:** 2017-06-07
Scientific Name: Lanius ludovicianus excubitorides
Common Name: Loggerhead Shrike
Occurrence Rank:
General Description: 1 Adult(s) (Unknown Sex); Breeding Bird Status: H; (2017)
Occurrence Data:
Directions:

Occurrence ID: 999989089 **First Observation:** 2017-06-07
Occurrence Class: Vertebrate Animal **Last Observation:** 2017-06-07
Scientific Name: Dolichonyx oryzivorus
Common Name: Bobolink
Occurrence Rank:
General Description: 1 Adult(s) (Unknown Sex); Breeding Bird Status: S; (2017)
Occurrence Data:
Directions:

Occurrence ID: 999989090 **First Observation:** 2017-06-07
Occurrence Class: Vertebrate Animal **Last Observation:** 2017-06-07
Scientific Name: Dolichonyx oryzivorus
Common Name: Bobolink
Occurrence Rank:
General Description: 1 Adult(s) (Unknown Sex); Breeding Bird Status: S; (2017)
Occurrence Data:
Directions:

Occurrence ID: 999989101 **First Observation:** 2017-06-19
Occurrence Class: Vertebrate Animal **Last Observation:** 2017-06-19
Scientific Name: Anthus spragueii
Common Name: Sprague's Pipit
Occurrence Rank:
General Description: 1 Adult(s) (Unknown Sex); Breeding Bird Status: S; (2017)
Occurrence Data:
Directions:

Occurrence ID: 999989102 **First Observation:** 2017-06-19
Occurrence Class: Vertebrate Animal **Last Observation:** 2017-06-19
Scientific Name: Dolichonyx oryzivorus
Common Name: Bobolink
Occurrence Rank:
General Description: 1 Adult(s) (Unknown Sex); Breeding Bird Status: S; (2017)
Occurrence Data:
Directions:

Occurrence ID: 999989105 **First Observation:** 2017-06-19
Occurrence Class: Vertebrate Animal **Last Observation:** 2017-06-19
Scientific Name: Lanius ludovicianus excubitorides
Common Name: Loggerhead Shrike
Occurrence Rank:
General Description: 1 Adult(s) (Unknown Sex); Breeding Bird Status: H; (2017)
Occurrence Data:
Directions:

Occurrence ID: 999989106 **First Observation:** 2017-06-19
Occurrence Class: Vertebrate Animal **Last Observation:** 2017-06-19
Scientific Name: Hirundo rustica
Common Name: Barn Swallow
Occurrence Rank:
General Description: 1 Adult(s) (Unknown Sex); Breeding Bird Status: H; (2017)
Occurrence Data:
Directions:

Occurrence ID: 999990062 **First Observation:** 2018-06-07
Occurrence Class: Vertebrate Animal **Last Observation:** 2018-06-07
Scientific Name: Lanius ludovicianus excubitorides
Common Name: Loggerhead Shrike
Occurrence Rank:
General Description: 1 Adult(s) (Unknown Sex); (2018)
Occurrence Data:
Directions:

Occurrence ID: 999990064 **First Observation:** 2018-06-13
Occurrence Class: Vertebrate Animal **Last Observation:** 2018-06-13
Scientific Name: Lanius ludovicianus excubitorides
Common Name: Loggerhead Shrike
Occurrence Rank:
General Description: 1 Adult(s) (Unknown Sex); (2018)
Occurrence Data:
Directions:

Occurrence ID: 999990355 **First Observation:** 2017-06-28
Occurrence Class: Vertebrate Animal **Last Observation:** 2017-06-28
Scientific Name: Hirundo rustica
Common Name: Barn Swallow
Occurrence Rank:
General Description: 1 Adult(s) (Unknown Sex); (2017)
Occurrence Data:
Directions:

Occurrence ID: 999990440 **First Observation:** 2017-06-29
Occurrence Class: Vertebrate Animal **Last Observation:** 2017-06-29
Scientific Name: Hirundo rustica
Common Name: Barn Swallow
Occurrence Rank:
General Description: 1 Adult(s) (Unknown Sex); (2017)
Occurrence Data:
Directions:

Occurrence ID: 999990468 **First Observation:** 2018-06-05
Occurrence Class: Vertebrate Animal **Last Observation:** 2018-06-05
Scientific Name: Hirundo rustica
Common Name: Barn Swallow
Occurrence Rank:
General Description: 1 Adult(s) (Unknown Sex); (2018)
Occurrence Data:
Directions:

Occurrence ID: 999990542 **First Observation:** 2018-06-06
Occurrence Class: Vertebrate Animal **Last Observation:** 2018-06-06
Scientific Name: Hirundo rustica
Common Name: Barn Swallow
Occurrence Rank:
General Description: 1 Adult(s) (Unknown Sex); (2018)
Occurrence Data:
Directions:

Occurrence ID: 999990563 **First Observation:** 2017-06-28
Occurrence Class: Vertebrate Animal **Last Observation:** 2017-06-28
Scientific Name: Riparia riparia
Common Name: Bank Swallow
Occurrence Rank:
General Description: 1 Adult(s) (Unknown Sex); (2017)
Occurrence Data:
Directions:

Occurrence ID: 999990566 **First Observation:** 2018-06-07
Occurrence Class: Vertebrate Animal **Last Observation:** 2018-06-07
Scientific Name: Riparia riparia
Common Name: Bank Swallow
Occurrence Rank:
General Description: 30 Adult(s) (Unknown Sex); (2018)
Occurrence Data:
Directions:

Occurrence ID: 999990650 **First Observation:** 2018-06-06
Occurrence Class: Vertebrate Animal **Last Observation:** 2018-06-06
Scientific Name: Anthus spragueii
Common Name: Sprague's Pipit
Occurrence Rank:
General Description: 1 Adult(s) (Unknown Sex); (2018)
Occurrence Data:
Directions:

Occurrence ID: 999990659 **First Observation:** 2018-06-15
Occurrence Class: Vertebrate Animal **Last Observation:** 2018-06-15
Scientific Name: Anthus spragueii
Common Name: Sprague's Pipit
Occurrence Rank:
General Description: 2 Adult(s) (Unknown Sex); (2018)
Occurrence Data:
Directions:

Occurrence ID: 999990707 **First Observation:** 2017-06-28
Occurrence Class: Vertebrate Animal **Last Observation:** 2017-06-28
Scientific Name: Anthus spragueii
Common Name: Sprague's Pipit
Occurrence Rank:
General Description: 1 Adult(s) (Unknown Sex); (2017)
Occurrence Data:
Directions:

Occurrence ID: 999990777 **First Observation:** 2018-06-15
Occurrence Class: Vertebrate Animal **Last Observation:** 2018-06-15
Scientific Name: Anthus spragueii
Common Name: Sprague's Pipit
Occurrence Rank:
General Description: 1 Adult(s) (Unknown Sex); (2018)
Occurrence Data:
Directions:

Occurrence ID: 999991231 **First Observation:** 2018-06-05
Occurrence Class: Vertebrate Animal **Last Observation:** 2018-06-05
Scientific Name: Dolichonyx oryzivorus
Common Name: Bobolink
Occurrence Rank:
General Description: 1 Adult(s) (Unknown Sex); (2018)
Occurrence Data:
Directions:

Occurrence ID: 999991252 **First Observation:** 2017-06-18
Occurrence Class: Vertebrate Animal **Last Observation:** 2018-06-22
Scientific Name: Dolichonyx oryzivorus
Common Name: Bobolink
Occurrence Rank:
General Description: Species detected (2017, 2018)
Occurrence Data:
Directions:

Occurrence ID: 999991306 **First Observation:** 2018-06-15
Occurrence Class: Vertebrate Animal **Last Observation:** 2018-06-15
Scientific Name: Dolichonyx oryzivorus
Common Name: Bobolink
Occurrence Rank:
General Description: 1 Adult(s) (Unknown Sex); (2018)
Occurrence Data:
Directions:

Occurrence ID: 999991372 **First Observation:** 2018-06-06
Occurrence Class: Vertebrate Animal **Last Observation:** 2018-06-06
Scientific Name: Dolichonyx oryzivorus
Common Name: Bobolink
Occurrence Rank:
General Description: 1 Adult(s) (Unknown Sex); (2018)
Occurrence Data:
Directions:

Occurrence ID: 999991383 **First Observation:** 2018-06-05
Occurrence Class: Vertebrate Animal **Last Observation:** 2018-06-05
Scientific Name: Dolichonyx oryzivorus
Common Name: Bobolink
Occurrence Rank:
General Description: 1 Adult(s) (Unknown Sex); (2018)
Occurrence Data:
Directions:

Occurrence ID: 999999281 **First Observation:** 2018-07-15
Occurrence Class: Vertebrate Animal **Last Observation:** 2022-07-15
Scientific Name: Lanius ludovicianus excubitorides
Common Name: Loggerhead Shrike
Occurrence Rank:
General Description: 1 Adult Males; 1 Adult Females; 2 Juveniles/ Young-of-Year; (Last reported 2022)
Occurrence Data:
Directions: SW-21-35-4-3

Occurrence ID: 9999100964 **First Observation:** 2018-summer
Occurrence Class: Vertebrate Animal **Last Observation:** 2018-summer
Scientific Name: Dolichonyx oryzivorus
Common Name: Bobolink
Occurrence Rank:
General Description: Species detected (2018)
Occurrence Data:
Directions: Beaver Creek Conservation Area

Occurrence ID: 9999101010 **First Observation:** 2018-05-24
Occurrence Class: Vertebrate Animal **Last Observation:** 2018-05-24
Scientific Name: Anthus spragueii
Common Name: Sprague's Pipit
Occurrence Rank:
General Description: 3 Unknown Sex/Age; (2018)
Occurrence Data:
Directions:

Occurrence ID: 9999106923 **First Observation:** 2019-07-08
Occurrence Class: Vertebrate Animal **Last Observation:** 2019-07-08
Scientific Name: Hirundo rustica
Common Name: Barn Swallow
Occurrence Rank:
General Description: Species detected (2019)
Occurrence Data:
Directions: SE-2-35-5-3

Occurrence ID: 9999115920 **First Observation:** 2019-07-03
Occurrence Class: Vertebrate Animal **Last Observation:** 2019-07-03
Scientific Name: Anthus spragueii
Common Name: Sprague's Pipit
Occurrence Rank:
General Description: Species detected (2019)
Occurrence Data:
Directions:

Occurrence ID: 9999116688 **First Observation:** 2011-08-13
Occurrence Class: Vertebrate Animal **Last Observation:** 2011-08-13
Scientific Name: Riparia riparia
Common Name: Bank Swallow
Occurrence Rank:
General Description: Species detected (2011)
Occurrence Data:
Directions: Cranberry Flats Upland

Occurrence ID: 9999116904 **First Observation:** 2015-08-22
Occurrence Class: Vertebrate Animal **Last Observation:** 2015-08-22
Scientific Name: Hirundo rustica
Common Name: Barn Swallow
Occurrence Rank:
General Description: Species detected (2015)
Occurrence Data:
Directions: Saskatoon: Furdale

Occurrence ID: 9999117159 **First Observation:** 2007-08-19
Occurrence Class: Vertebrate Animal **Last Observation:** 2007-08-19
Scientific Name: Hirundo rustica
Common Name: Barn Swallow
Occurrence Rank:
General Description: Species detected (2007)
Occurrence Data:
Directions: Saskatoon River

Occurrence ID: 9999118940 **First Observation:** 2016-05-31
Occurrence Class: Vertebrate Animal **Last Observation:** 2016-05-31
Scientific Name: Hirundo rustica
Common Name: Barn Swallow
Occurrence Rank:
General Description: Species detected (2016)
Occurrence Data:
Directions: Chief Whitecap Park

Occurrence ID: 9999118941 **First Observation:** 2016-05-31
Occurrence Class: Vertebrate Animal **Last Observation:** 2016-05-31
Scientific Name: Riparia riparia
Common Name: Bank Swallow
Occurrence Rank:
General Description: Species detected (2016)
Occurrence Data:
Directions: Chief Whitecap Park

Occurrence ID: 9999119377 **First Observation:** 2016-05-31
Occurrence Class: Vertebrate Animal **Last Observation:** 2016-05-31
Scientific Name: Hirundo rustica
Common Name: Barn Swallow
Occurrence Rank:
General Description: Species detected (2016)
Occurrence Data:
Directions: Saskatoon--Furdale neighborhood

Occurrence ID: 9999120262 **First Observation:** 2010-10-01
Occurrence Class: Vertebrate Animal **Last Observation:** 2010-10-01
Scientific Name: Lanius ludovicianus excubitorides
Common Name: Loggerhead Shrike
Occurrence Rank:
General Description: 1 Unknown Sex/Age; (2010)
Occurrence Data:
Directions: Nr Saskatoon, Saskatchewan

Occurrence ID: 9999122113 **First Observation:** 2019-07-08
Occurrence Class: Vertebrate Animal **Last Observation:** 2019-07-08
Scientific Name: Anthus spragueii
Common Name: Sprague's Pipit
Occurrence Rank:
General Description: 1 Adult(s) Unknown Sex; (2019)
Occurrence Data:
Directions: 13UCT86.08

Occurrence ID: 9999123098 **First Observation:** 2018-07-18
Occurrence Class: Vertebrate Animal **Last Observation:** 2018-07-18
Scientific Name: Riparia riparia
Common Name: Bank Swallow
Occurrence Rank:
General Description: Species detected (2018)
Occurrence Data:
Directions:

Occurrence ID: 9999123103 **First Observation:** 2018-07-05
Occurrence Class: Vertebrate Animal **Last Observation:** 2018-07-05
Scientific Name: Hirundo rustica
Common Name: Barn Swallow
Occurrence Rank:
General Description: Species detected (2018)
Occurrence Data:
Directions:

Occurrence ID: 9999124994 **First Observation:** 2018-06-13
Occurrence Class: Vertebrate Animal **Last Observation:** 2018-06-13
Scientific Name: Lanius ludovicianus excubitorides
Common Name: Loggerhead Shrike
Occurrence Rank:
General Description: Breeding Bird Status: H; (2018)
Occurrence Data:
Directions: PC 11

Occurrence ID: 9999125225 **First Observation:** 2017-06-28
Occurrence Class: Vertebrate Animal **Last Observation:** 2017-06-28
Scientific Name: Hirundo rustica
Common Name: Barn Swallow
Occurrence Rank:
General Description: Breeding Bird Status: H; (2017)
Occurrence Data:
Directions: Point Counts 10, 11, 13, 25, 28

Occurrence ID: 9999125227 **First Observation:** 2017-06-29
Occurrence Class: Vertebrate Animal **Last Observation:** 2017-06-29
Scientific Name: Hirundo rustica
Common Name: Barn Swallow
Occurrence Rank:
General Description: Breeding Bird Status: H; (2017)
Occurrence Data:
Directions: 09

Occurrence ID: 9999125327 **First Observation:** 2017-07-26
Occurrence Class: Vertebrate Animal **Last Observation:** 2017-07-26
Scientific Name: Hirundo rustica
Common Name: Barn Swallow
Occurrence Rank:
General Description: 2 Adult(s) Unknown Sex; Breeding Bird Status: H; (2017)
Occurrence Data:
Directions: Black Tern colony

Occurrence ID: 9999125594 **First Observation:** 2018-06-23
Occurrence Class: Vertebrate Animal **Last Observation:** 2018-06-23
Scientific Name: Hirundo rustica
Common Name: Barn Swallow
Occurrence Rank:
General Description: 2 Adult(s) Unknown Sex; Breeding Bird Status: H; (2018)
Occurrence Data:
Directions: Cranberry Flats Conservation Area

Occurrence ID: 9999125661 **First Observation:** 2018-07-01
Occurrence Class: Vertebrate Animal **Last Observation:** 2018-07-01
Scientific Name: Hirundo rustica
Common Name: Barn Swallow
Occurrence Rank:
General Description: 1 Adult(s) Unknown Sex; Breeding Bird Status: H; (2018)
Occurrence Data:
Directions: Clarence Ave at Eldorado Lane wtlds

Occurrence ID: 9999125735 **First Observation:** 2018-07-18
Occurrence Class: Vertebrate Animal **Last Observation:** 2018-07-18
Scientific Name: Hirundo rustica
Common Name: Barn Swallow
Occurrence Rank:
General Description: 10 Adult(s) Unknown Sex; Breeding Bird Status: H; (2018)
Occurrence Data:
Directions: Beaver Creek Conservation Area

Occurrence ID: 9999126221 **First Observation:** 2017-06-28
Occurrence Class: Vertebrate Animal **Last Observation:** 2017-06-28
Scientific Name: Riparia riparia
Common Name: Bank Swallow
Occurrence Rank:
General Description: Breeding Bird Status: H; (2017)
Occurrence Data:
Directions: Point Counts 10, 11, 13, 25, 28

Occurrence ID: 9999126382 **First Observation:** 2017-06-28
Occurrence Class: Vertebrate Animal **Last Observation:** 2017-06-28
Scientific Name: Anthus spragueii
Common Name: Sprague's Pipit
Occurrence Rank:
General Description: Breeding Bird Status: S; (2017)
Occurrence Data:
Directions: Point Counts 10, 11, 13, 25, 28

Occurrence ID: 9999127198 **First Observation:** 2017-06-18
Occurrence Class: Vertebrate Animal **Last Observation:** 2018-06-22
Scientific Name: Dolichonyx oryzivorus
Common Name: Bobolink
Occurrence Rank:
General Description: Species detected (2017, 2018)
Occurrence Data:
Directions: Point Count 16

Occurrence ID: 9999127323 **First Observation:** 2019-05-25
Occurrence Class: Vertebrate Animal **Last Observation:** 2019-05-25
Scientific Name: Dolichonyx oryzivorus
Common Name: Bobolink
Occurrence Rank:
General Description: 1 Adult(s) Unknown Sex; Breeding Bird Status: S; (2019)
Occurrence Data:
Directions: Salvation Army Camp

Occurrence ID: 9999127483 **First Observation:** 2017-08-25
Occurrence Class: Vertebrate Animal **Last Observation:** 2017-08-25
Scientific Name: Cardellina canadensis
Common Name: Canada Warbler
Occurrence Rank:
General Description: 1 Adult(s) Unknown Sex; Breeding Bird Status: X; (2017)
Occurrence Data:
Directions: Own Backyard

Occurrence ID: 9999129341 **First Observation:** 2020-05-29
Occurrence Class: Vertebrate Animal **Last Observation:** 2020-05-29
Scientific Name: Anthus spragueii
Common Name: Sprague's Pipit
Occurrence Rank:
General Description: 1 Adult(s) Unknown Sex; (2020)
Occurrence Data:
Directions: 13UCT86.05

Occurrence ID: 9999129773 **First Observation:** 2020-05-29
Occurrence Class: Vertebrate Animal **Last Observation:** 2020-05-29
Scientific Name: Dolichonyx oryzivorus
Common Name: Bobolink
Occurrence Rank:
General Description: 1 Adult(s) Unknown Sex; (2020)
Occurrence Data:
Directions: 13UCT86.15

Occurrence ID: 9999146498 **First Observation:** 2021-06-17
Occurrence Class: Vertebrate Animal **Last Observation:** 2021-06-17
Scientific Name: Riparia riparia
Common Name: Bank Swallow
Occurrence Rank:
General Description: 9 Adult(s) Unknown Sex; Breeding Bird Status: AE; Nest/Burrow/Den; (2021)
Occurrence Data:
Directions: Fred Heal Canoe Launch

Occurrence ID: 9999146395 **First Observation:** 2021-06-17
Occurrence Class: Vertebrate Animal **Last Observation:** 2021-06-29
Scientific Name: Riparia riparia
Common Name: Bank Swallow
Occurrence Rank:
General Description: Species detected; Nest/Burrow/Den (2021)
Occurrence Data:
Directions: Beaver Creek Conservation Area

Occurrence ID: 9999147260 **First Observation:** 2022-07-01
Occurrence Class: Vertebrate Animal **Last Observation:** 2022-07-01
Scientific Name: Riparia riparia
Common Name: Bank Swallow
Occurrence Rank:
General Description: 1 Unknown Sex/Age; (2022)
Occurrence Data:
Directions:

Occurrence ID: 2746 **First Observation:** 1955
Occurrence Class: Vertebrate Animal **Last Observation:** 1955
Scientific Name: Perognathus fasciatus
Common Name: Olive-backed Pocket Mouse
Occurrence Rank: H - Historical
General Description:
Occurrence Data: 1955: Alexander Bakerspigel trapped pocket mice while doing a survey of Saskatchewan rodents (A65NER01SKCA and A65NER02SKCA).
Directions: "Saskatoon, a few miles south."

Occurrence ID: 3294 **First Observation:** 1958
Occurrence Class: Vertebrate Animal **Last Observation:** 1961
Scientific Name: Perognathus fasciatus
Common Name: Olive-backed Pocket Mouse
Occurrence Rank: H - Historical
General Description:
Occurrence Data: 1958: 7 July. Three specimens collected by R. W. Nero (A58NER01SKCA). 1 July 1958 to 1 June 1961: Stomach contents from Great Horned Olws collected and identifed. Two female specimens revealed pocket mice. One owl had eaten 2 pocket mice and one had eaten 1 pocket mouse. Collected by Keith Thue at the Provincial Game Farm, Beaver Creek Saskatchewan (A62CON01SKCA, A65NER01SKCA). obtained from Dave Baron, SMNH.
Directions: Beaver Creek Provincial Game Farm, 9 miles S of Saskatoon.

Occurrence ID: 999989104 **First Observation:** 2017-06-19
Occurrence Class: Vertebrate Animal **Last Observation:** 2017-06-19
Scientific Name: Aechmophorus clarkii
Common Name: Clark's Grebe
Occurrence Rank:
General Description: 1 Adult(s) (Unknown Sex); Breeding Bird Status: H; (2017)
Occurrence Data:
Directions:

Occurrence ID: 9999100953 **First Observation:** 2018-06-14
Occurrence Class: Vertebrate Animal **Last Observation:** 2018-06-14
Scientific Name: Tympanuchus phasianellus
Common Name: Sharp-tailed Grouse
Occurrence Rank:
General Description: Lek; (2018)
Occurrence Data:
Directions: Beaver Creek Conservation Area

Occurrence ID: 9999101008 **First Observation:** 2018-summer
Occurrence Class: Vertebrate Animal **Last Observation:** 2018-summer
Scientific Name: Icteria virens auricollis
Common Name: Yellow-Breasted Chat
Occurrence Rank:
General Description: Species detected (1905)
Occurrence Data:
Directions: Beaver Creek Conservation Area

Occurrence ID: 9999102465 **First Observation:** 2018-09-27
Occurrence Class: Vertebrate Animal **Last Observation:** 2018-09-27
Scientific Name: Accipiter cooperii
Common Name: Cooper's Hawk
Occurrence Rank:
General Description: Species detected (2018)
Occurrence Data:
Directions: Division No. 11, SK, Canada

Occurrence ID: 9999102579 **First Observation:** 2019-06-13
Occurrence Class: Vertebrate Animal **Last Observation:** 2019-06-13
Scientific Name: Cathartes aura
Common Name: Turkey Vulture
Occurrence Rank:
General Description: Species detected (2019)
Occurrence Data:
Directions: Division No. 11, SK, Canada

Occurrence ID: 9999102580 **First Observation:** 2019-06-04
Occurrence Class: Vertebrate Animal **Last Observation:** 2019-06-04
Scientific Name: Cathartes aura
Common Name: Turkey Vulture
Occurrence Rank:
General Description: Species detected (2019)
Occurrence Data:
Directions: Division No. 11, SK, Canada

Occurrence ID: 9999102581 **First Observation:** 2018-08-03
Occurrence Class: Vertebrate Animal **Last Observation:** 2018-08-03
Scientific Name: Cathartes aura
Common Name: Turkey Vulture
Occurrence Rank:
General Description: Species detected (2018)
Occurrence Data:
Directions: Division No. 11, SK, Canada

Occurrence ID: 9999102706 **First Observation:** 2019-06-13
Occurrence Class: Vertebrate Animal **Last Observation:** 2019-06-13
Scientific Name: Icteria virens auricollis
Common Name: Yellow-Breasted Chat
Occurrence Rank:
General Description: Species detected (2019)
Occurrence Data:
Directions: Division No. 11, SK, Canada

Occurrence ID: 9999117451 **First Observation:** 2015-08-22
Occurrence Class: Vertebrate Animal **Last Observation:** 2015-08-22
Scientific Name: Accipiter cooperii
Common Name: Cooper's Hawk
Occurrence Rank:
General Description: Species detected (2015)
Occurrence Data:
Directions: Saskatoon: Furdale

Occurrence ID: 9999117462 **First Observation:** 2016-09-10
Occurrence Class: Vertebrate Animal **Last Observation:** 2016-09-10
Scientific Name: Accipiter cooperii
Common Name: Cooper's Hawk
Occurrence Rank:
General Description: Species detected (2016)
Occurrence Data:
Directions: Diefenbaker Park, Saskatoon

Occurrence ID: 9999118050 **First Observation:** 2016-09-10
Occurrence Class: Vertebrate Animal **Last Observation:** 2016-09-10
Scientific Name: Pandion haliaetus
Common Name: Osprey
Occurrence Rank:
General Description: Species detected (2016)
Occurrence Data:
Directions: Diefenbaker Park, Saskatoon

Occurrence ID: 9999118114 **First Observation:** 2015-12-01
Occurrence Class: Vertebrate Animal **Last Observation:** 2015-12-01
Scientific Name: Dryocopus pileatus
Common Name: Pileated Woodpecker
Occurrence Rank:
General Description: Species detected (2015)
Occurrence Data:
Directions: McConnell Ave, Saskatoon.SK

Occurrence ID: 9999118115 **First Observation:** 2016-11-19
Occurrence Class: Vertebrate Animal **Last Observation:** 2016-11-19
Scientific Name: Dryocopus pileatus
Common Name: Pileated Woodpecker
Occurrence Rank:
General Description: Species detected (2016)
Occurrence Data:
Directions: CA-SK-Saskatoon-2705 McConnell Ave - 52.0952x-106.6619

Occurrence ID: 9999118116 **First Observation:** 2016-11-06
Occurrence Class: Vertebrate Animal **Last Observation:** 2016-11-06
Scientific Name: Dryocopus pileatus
Common Name: Pileated Woodpecker
Occurrence Rank:
General Description: Species detected (2016)
Occurrence Data:
Directions: 2711 McConnell Avenue (Alley)

Occurrence ID: 9999118196 **First Observation:** 2012-03-10
Occurrence Class: Vertebrate Animal **Last Observation:** 2012-03-10
Scientific Name: Pinicola enucleator
Common Name: Pine Grosbeak
Occurrence Rank:
General Description: Species detected (2012)
Occurrence Data:
Directions: Chief Whitecap Park Field Trail

Occurrence ID: 9999118405 **First Observation:** 2006-07-03
Occurrence Class: Vertebrate Animal **Last Observation:** 2006-07-03
Scientific Name: Cathartes aura
Common Name: Turkey Vulture
Occurrence Rank:
General Description: Species detected (2006)
Occurrence Data:
Directions: Cutler Property

Occurrence ID: 9999118409 **First Observation:** 2016-09-10
Occurrence Class: Vertebrate Animal **Last Observation:** 2016-09-10
Scientific Name: Cathartes aura
Common Name: Turkey Vulture
Occurrence Rank:
General Description: Species detected (2016)
Occurrence Data:
Directions: Diefenbaker Park, Saskatoon

Occurrence ID: 9999118681 **First Observation:** 2019-07-08
Occurrence Class: Vertebrate Animal **Last Observation:** 2019-07-08
Scientific Name: Accipiter cooperii
Common Name: Cooper's Hawk
Occurrence Rank:
General Description: 1 Adult(s) Unknown Sex; Breeding Bird Status: H; (2019)
Occurrence Data:
Directions:

Occurrence ID: 9999119383 **First Observation:** 2016-09-30
Occurrence Class: Vertebrate Animal **Last Observation:** 2016-09-30
Scientific Name: Accipiter cooperii
Common Name: Cooper's Hawk
Occurrence Rank:
General Description: Species detected (2016)
Occurrence Data:
Directions: Saskatoon--Holiday Park

Occurrence ID: 9999119384 **First Observation:** 2013-05-08
Occurrence Class: Vertebrate Animal **Last Observation:** 2013-05-08
Scientific Name: Cathartes aura
Common Name: Turkey Vulture
Occurrence Rank:
General Description: Species detected (2013)
Occurrence Data:
Directions: Saskatoon--Holiday Park

Occurrence ID: 9999119401 **First Observation:** 2009-04-20
Occurrence Class: Vertebrate Animal **Last Observation:** 2009-04-20
Scientific Name: Larus hyperboreus
Common Name: Glaucous Gull
Occurrence Rank:
General Description: Species detected (2009)
Occurrence Data:
Directions: Saskatoon--Queen Elizabeth Power Station

Occurrence ID: 9999120530 **First Observation:** 2011-07-15
Occurrence Class: Vertebrate Animal **Last Observation:** 2011-07-15
Scientific Name: Icteria virens auricollis
Common Name: Yellow-Breasted Chat
Occurrence Rank:
General Description: 1 Adult Female(s); (2011)
Occurrence Data:
Directions: Beaver Creek Conservation Area, 13 km S of Saskatoon, Saskatchewan

---

Occurrence ID: 9999120576 **First Observation:** 2008-08-26
Occurrence Class: Vertebrate Animal **Last Observation:** 2008-08-26
Scientific Name: Cathartes aura
Common Name: Turkey Vulture
Occurrence Rank:
General Description: 1 Unknown Sex/Age; (2008)
Occurrence Data:
Directions: N side of Beaver Creek

Occurrence ID: 9999120756 **First Observation:** 2016-05-07
Occurrence Class: Vertebrate Animal **Last Observation:** 2016-05-07
Scientific Name: Cathartes aura
Common Name: Turkey Vulture
Occurrence Rank:
General Description: 1 Unknown Sex/Age; (2016)
Occurrence Data:
Directions:

Occurrence ID: 9999124708 **First Observation:** 2019-05-04
Occurrence Class: Vertebrate Animal **Last Observation:** 2019-05-04
Scientific Name: Cathartes aura
Common Name: Turkey Vulture
Occurrence Rank:
General Description: 3 Adult(s) Unknown Sex; (2019)
Occurrence Data:
Directions: Paradise Beach

Occurrence ID: 9999124709 **First Observation:** 2019-05-05
Occurrence Class: Vertebrate Animal **Last Observation:** 2019-05-05
Scientific Name: Cathartes aura
Common Name: Turkey Vulture
Occurrence Rank:
General Description: 3 Adult(s) Unknown Sex; Breeding Bird Status: X; (2019)
Occurrence Data:
Directions: Cranberry Flats Conservation Area

Occurrence ID: 9999127155 **First Observation:** 2018-05-26
Occurrence Class: Vertebrate Animal **Last Observation:** 2018-05-30
Scientific Name: Icteria virens auricollis
Common Name: Yellow-Breasted Chat
Occurrence Rank:
General Description: Species detected (2018)
Occurrence Data:
Directions: Chat spot

Occurrence ID: 9999127661 **First Observation:** 2019-03-23
Occurrence Class: Vertebrate Animal **Last Observation:** 2019-03-23
Scientific Name: Tympanuchus phasianellus
Common Name: Sharp-tailed Grouse
Occurrence Rank:
General Description: 8 Adult(s) Unknown Sex; Breeding Bird Status: H; Lek; (2019)
Occurrence Data:
Directions: Beaver Creek Conservation Area

Occurrence ID: 9999127678 **First Observation:** 2017-07-26
Occurrence Class: Vertebrate Animal **Last Observation:** 2017-07-26
Scientific Name: Accipiter cooperii
Common Name: Cooper's Hawk
Occurrence Rank:
General Description: 1 Adult(s) Unknown Sex; Breeding Bird Status: H; (2017)
Occurrence Data:
Directions: Black Tern colony

Occurrence ID: 9999127714 **First Observation:** 2018-03-28
Occurrence Class: Vertebrate Animal **Last Observation:** 2018-03-28
Scientific Name: Aquila chrysaetos
Common Name: Golden Eagle
Occurrence Rank:
General Description: 1 Adult(s) Unknown Sex; Breeding Bird Status: X; (2018)
Occurrence Data:
Directions: Saskatoon--Diefenbaker Park

Occurrence ID: 9999127892 **First Observation:** 2017-03-25
Occurrence Class: Vertebrate Animal **Last Observation:** 2017-03-25
Scientific Name: Larus hyperboreus
Common Name: Glaucous Gull
Occurrence Rank:
General Description: 1 Adult(s) Unknown Sex; (2017)
Occurrence Data:
Directions: Saskatoon--Queen Elizabeth Power Station

Occurrence ID: 9999128655 **First Observation:** 2020-03-03
Occurrence Class: Vertebrate Animal **Last Observation:** 2020-03-03
Scientific Name: Myadestes townsendi
Common Name: Townsend's Solitaire
Occurrence Rank:
General Description: Species detected (2020)
Occurrence Data:
Directions: Division No. 11, SK, Canada

Occurrence ID: 9999144752 **First Observation:** 2021-07-03
Occurrence Class: Vertebrate Animal **Last Observation:** 2021-07-03
Scientific Name: Cathartes aura
Common Name: Turkey Vulture
Occurrence Rank:
General Description: Species detected (2021)
Occurrence Data:
Directions: Saskatchewan, Canada

Occurrence ID: 9999144764 **First Observation:** 2021-07-02
Occurrence Class: Vertebrate Animal **Last Observation:** 2021-07-02
Scientific Name: Cathartes aura
Common Name: Turkey Vulture
Occurrence Rank:
General Description: Species detected (2021)
Occurrence Data:
Directions: Diefenbaker Management Area, Saskatoon, SK, Canada

---

Occurrence ID: 17403 **First Observation:** 2018-07-29
Occurrence Class: Invertebrate Animal **Last Observation:** 2020-07-04
Scientific Name: Cicindela formosa gibsoni
Common Name: Gibson's Big Sand Tiger Beetle
Occurrence Rank: E - Verified extant (viability not assessed)
General Description:
Occurrence Data: 2018: 5 collected. 2020: 1 observed.
Directions: Cranberry flats

Occurrence ID: 21716 **First Observation:** 1993-07-29
Occurrence Class: Invertebrate Animal **Last Observation:** 1993-07-29
Scientific Name: Satyrium liparops aliparops
Common Name: Striped Hairstreak (S)
Occurrence Rank: H - Historical
General Description:
Occurrence Data: 1 Adult Female(s); (1993)
Directions: DUNDURN.

Occurrence ID: 21924 **First Observation:** 2021-09-03
Occurrence Class: Invertebrate Animal **Last Observation:** 2021-09-03
Scientific Name: Bombus terricola
Common Name: Yellow-banded Bumble Bee
Occurrence Rank: E - Verified extant (viability not assessed)
General Description:
Occurrence Data: 1 individual (2021)
Directions: Beaver Creek Conservation Area

Occurrence ID: 22007 **First Observation:** 2019-05-12
Occurrence Class: Invertebrate Animal **Last Observation:** 2019-05-12
Scientific Name: Eurosta solidaginis
Common Name: Goldenrod Gall Fly
Occurrence Rank: E - Verified extant (viability not assessed)
General Description:
Occurrence Data: Species Detected; (2019)
Directions:

Occurrence ID: 22230 **First Observation:** 2010-06-29
Occurrence Class: Invertebrate Animal **Last Observation:** 2010-06-29
Scientific Name: Sympetrum pallipes
Common Name: Striped Meadowhawk
Occurrence Rank: E - Verified extant (viability not assessed)
General Description:
Occurrence Data: Species detected (2010)
Directions:

Occurrence ID: 22443 **First Observation:** 2017-06-26
Occurrence Class: Invertebrate Animal **Last Observation:** 2017-06-26
Scientific Name: Xanthorhoe ferrugata ferrugata
Common Name: Red Twin-Spot Moth
Occurrence Rank: E - Verified extant (viability not assessed)
General Description:
Occurrence Data: Species detected (2017)
Directions: Division No. 11, SK, Canada

Occurrence ID: 3528 **First Observation:**
Occurrence Class: Animal Assemblage **Last Observation:**
Scientific Name: Migratory Bird Concentration Site
Common Name: Migratory Bird Concentration Site
Occurrence Rank:
General Description: Reference: Poston, B., D.M. Ealey, P.S Taylor and G.B. McKeating. 1990. Priority Migratory Bird Habitats of Canada's Prairie Provinces. Canadian Wildlife Service, Western and Northern Region, Edmonton. 107 pp.
Occurrence Data: Locally significant for staging geese (1000-5000 geese (mixed) or white geese (Snow and/or Ross') or 1000-3000 Canada Geese, Greater White-fronted geese or unidentified dark geese.
Directions: SASKATOON - DOWNSTREAM

Occurrence ID: 762 **First Observation:** 1952-08-09
Occurrence Class: Vascular Plant **Last Observation:** 2022-09-01
Scientific Name: Chenopodium subglabrum
Common Name: Smooth Goosefoot
Occurrence Rank: BC - Good or fair estimated viability
General Description:
Occurrence Data: 1952-08-05: No data; 1977-09-08: No data; 1991: sparse; 2004: 1 plant; 2012: revisit of SF 6072 - no plants found, habitat not suitable; 2017 - 6 plants found at new site; 2019 - 6 plants at 2017 site; 2021 - 2 plants at 2017 site; 2022 - 13 plants at 2017 site; Total of 3 sites
Directions: Site 1: "... 15mi S of SASKATOON."
Site 2: Beaver Creek (51 58'N 106 42'W) 51.97 106.7 NE corner NE1/4 Sec 7 T35 R05 W3

From Saskatoon, drive south along highway #219 to the Beaver Creek Conservation Area. The plant occurs in the sand dunes to the north of the entrance road.

Occurrence ID: 917 **First Observation:** 1931
Occurrence Class: Vascular Plant **Last Observation:** 1931-07-23
Scientific Name: Elymus glaucus ssp. glaucus
Common Name: Blue Wild Rye
Occurrence Rank: H - Historical
General Description:
Occurrence Data: 1931 - no data in 1 site.
Directions: Saskatoon

Occurrence ID: 944 **First Observation:** 1972-05-25
Occurrence Class: Vascular Plant **Last Observation:** 1972-05-25
Scientific Name: Astragalus australis var. glabriusculus
Common Name: Southern Milk-vetch
Occurrence Rank: H - Historical
General Description: Sandy prairie slopes above E shore of South Sask. River
Occurrence Data: 1972 - species observed in 1 site.
Directions: Cranberry Flats 52 04'N 106 39'W 52.07 106.65 Sec 3 T36 R05

Occurrence ID: 966 **First Observation:** 1992-08-17
Occurrence Class: Vascular Plant **Last Observation:** 1992-08-17
Scientific Name: Scirpus pallidus
Common Name: Pale Bulrush
Occurrence Rank: E - Verified extant (viability not assessed)
General Description: Wet sandy alluvium With much S. microcarpus, Carex bebbii Only occasional
Occurrence Data:
Directions: Saskatoon E bank of bayou of South Saskatchewan River E of Yorath Island (52 05'N 106 43'W) 52.08 106.72 LSD 8 in Sec 12

Occurrence ID: 1066 **First Observation:** 1972-00-00
Occurrence Class: Vascular Plant **Last Observation:** 1972-00-00
Scientific Name: Astragalus australis var. glabriusculus
Common Name: Southern Milk-vetch
Occurrence Rank: H - Historical
General Description:
Occurrence Data: 1972 - no data in 1 site.
Directions: Cranberry Flats S of Saskatoon 52 03'N 106 43'W 52.05 106.72 NE Sec 3 T35 R05 W3

Occurrence ID: 2118 **First Observation:** 1939-06-29
Occurrence Class: Vascular Plant **Last Observation:** 1939-06-29
Scientific Name: Potentilla rubricaulis
Common Name: Red-stemmed Cinquefoil
Occurrence Rank: H - Historical
General Description:
Occurrence Data: 1939 - species observed in 1 sit
Directions: Saskatoon

Occurrence ID: 2231 **First Observation:** 1971-06-11
Occurrence Class: Vascular Plant **Last Observation:** 1971-06-11
Scientific Name: Botrychium minganense
Common Name: Mingan Moonwort
Occurrence Rank: H - Historical
General Description:
Occurrence Data: 1971 - no count Beaver Creek wooded slope above creek
Directions: BeaverCreek SW6-35-5W3

Occurrence ID: 2791 **First Observation:** 1972-06-07
Occurrence Class: Vascular Plant **Last Observation:** 1972-06-07
Scientific Name: Carex eburnea
Common Name: Bristle-leaved Sedge
Occurrence Rank: H - Historical
General Description:
Occurrence Data: 1972 - species observed in 1 site.
Directions: 6 mi SW of Saskatoon 51 57 1/7'N 106 47"'W 51.95 106.8 NW1/4 Sec 33 T34 R06 W3

Occurrence ID: 2840 **First Observation:** 1937-09-09
Occurrence Class: Vascular Plant **Last Observation:** 1937-09-09
Scientific Name: Ambrosia acanthicarpa
Common Name: Bur Ragweed
Occurrence Rank: H - Historical
General Description:
Occurrence Data: 1937 - species observed
Directions: Beaver Creek

Occurrence ID: 3306 **First Observation:** 1971-07-29
Occurrence Class: Vascular Plant **Last Observation:** 1972-06-15
Scientific Name: Lupinus pusillus ssp. pusillus
Common Name: Small Lupine
Occurrence Rank: H - Historical
General Description:
Occurrence Data: 1971 - species observed in 1 site. 1972 - extremely rare in 1 site
Directions:

Occurrence ID: 4024 **First Observation:** 1952-08-09
Occurrence Class: Vascular Plant **Last Observation:** 1952-08-09
Scientific Name: Carex hystericina
Common Name: Porcupine Sedge
Occurrence Rank: H - Historical
General Description:
Occurrence Data: 1952 - rare/scarce, 1 clump in 1 site. same site several specimens two collectors GFL JHH
Directions: Beaver Creek southwest corner of NW6-35-5W3 southside of creek

---

Occurrence ID: 4464 **First Observation:** 1970-06-28
Occurrence Class: Vascular Plant **Last Observation:** 1970-07-07
Scientific Name: Elymus lanceolatus ssp. psammophilus
Common Name: Sand-dune Wheatgrass
Occurrence Rank: H - Historical
General Description:
Occurrence Data: 1970 - species observed in 2 sites.
Directions:

Occurrence ID: 5834 **First Observation:** 1934-06-24
Occurrence Class: Vascular Plant **Last Observation:** 1984-04-29
Scientific Name: Carex eburnea
Common Name: Bristle-leaved Sedge
Occurrence Rank: C? - Possibly fair estimated viability
General Description: Site 1: (1947) woodedslope near creek Site 1: (1952) Aspen and Birch woods in sandy soil S. side creek With Carex rossii, Oryzopsis asperifolia. Site 2: (1934) shadedsandy bank along river. Site 2: (1984) Prairie slopes of South Saskatchewan River bluffs N of creek Along trails.
Occurrence Data: 1934 - Site 2 species observed 1947 - Site1 species observed 1952 - Site 1: Not common. 1984 - Site 2: Scattered
Directions: Beaver Creek Site 1: (51|58'N 106|42'W) 51.97 106.7 SW corner NW1/4 Sec 6 T35 R05 W3. Site 2: 13km S of Saskatoon along Rt 219 (51|58'N 106|42'W) 51.97 106.7 NE1/4 Sec 1 T35 R06 W3

Occurrence ID: 6367 **First Observation:** 1972-07-10
Occurrence Class: Vascular Plant **Last Observation:** 1972-07-10
Scientific Name: Elymus glaucus ssp. glaucus
Common Name: Blue Wild Rye
Occurrence Rank: H - Historical
General Description:
Occurrence Data: 1972 - Common in 1 site.
Directions: 8.7 mi S of Saskatoon Beaver Creek area 51 58 3/4'N 106 44'W 51.98 106.73 SE1/4 Sec 1 T35 R06 W3

Occurrence ID: 6393 **First Observation:** 1972-07-20
Occurrence Class: Vascular Plant **Last Observation:** 1972-07-20
Scientific Name: Carex crawei
Common Name: Crawe's Sedge
Occurrence Rank: H - Historical
General Description:
Occurrence Data: 1972 - species observed in 1 site. Occurs in Sasktoon.
Directions: 8 mi E of "old J.D." on 8th St in Saskatoon 52 07'05"N 106 26'W 52.12 106.43 Sec 30 T37 R03 W3

Occurrence ID: 6675 **First Observation:** 1950-08-02
Occurrence Class: Vascular Plant **Last Observation:** 1950-08-02
Scientific Name: Potamogeton strictifolius
Common Name: Upright Narrow-leaved Pondweed
Occurrence Rank: H - Historical
General Description: SUBMERGED
Occurrence Data:
Directions: Beaver Creek

Occurrence ID: 6715 **First Observation:** 1970-06-08
Occurrence Class: Vascular Plant **Last Observation:** 1970-06-08
Scientific Name: Astragalus australis var. glabriusculus
Common Name: Southern Milk-vetch
Occurrence Rank: H - Historical
General Description: On sandy, rocky, W-facing slopes and benches above river bank
Occurrence Data: 1970 - species observed in 1 site.
Directions: Cranberry Flats Ski area; on E shore of South Sask. River 6 mi S of Saskatoon 52 01'30"N 106 43'W 52.03 106.72 SW Sec 30 T35 R05 W3

Occurrence ID: 6792 **First Observation:** 1971-07-08
Occurrence Class: Vascular Plant **Last Observation:** 1971-07-08
Scientific Name: Carex hystericina
Common Name: Porcupine Sedge
Occurrence Rank: H - Historical
General Description:
Occurrence Data: 1971 - species observed in 1 site.
Directions: 8 MILES SOUTH AND 3 MILES WEST OF SASKATOON EXHIBITION GROUNDS.

Occurrence ID: 8170 **First Observation:** 1978-05-19
Occurrence Class: Vascular Plant **Last Observation:** 1988-05-19
Scientific Name: Viola pedatifida
Common Name: Crowfoot Violet
Occurrence Rank: E - Verified extant (viability not assessed)
General Description:
Occurrence Data:
Directions: Beaver Creek

Occurrence ID: 12613 **First Observation:** 2006-09-07
Occurrence Class: Vascular Plant **Last Observation:** 2009-09-17
Scientific Name: Bidens frondosa
Common Name: Tall Bur-marigold
Occurrence Rank: D - Poor estimated viability
General Description: Creek bank on both sides. Sandy substrate. Associated species include: Plantago major, Potentilla plattensis, Equisetum arvense, Epilobium ciliatum, Equisetum palustris, Polygonum arenastrum, Chenopodium salinum, Juncus bufonius, Lycopus sp. , Mentha arvensis, Bidens cernua. MOISTURE: Hygric to hydric.
Occurrence Data: Approximately 11 plants (flowering) in a 10 x 8 m area. (Most were very small plants)
Directions: Highway 219 south of Saskatoon, Saskatchewan at Beaver Creek. Plants noted on west side of highway on both sides of creek. LEGAL: TWP: 35 RGE: 5 W: 3W SECTION: 6

Occurrence ID: 12615 **First Observation:** 1996-08-08
Occurrence Class: Vascular Plant **Last Observation:** 2006-09-08
Scientific Name: Corispermum americanum var. americanu
Common Name: American Bugseed
Occurrence Rank: E - Verified extant (viability not assessed)
General Description:
Occurrence Data: 1996 - species observed in 1 site 2006 - species observed in 1 site.
Directions: SITE NAME: Highway 219 south of Saskatoon, SK. DIRECTIONS TO POPULATION (include descriptions of landmarks and distances if possible): Highway 219 south of Saskatoon and south of Beaver Creek along highway ROW. SITE 2. (NAD83 Zone13) UTM EASTING: 382205 UTM NORTHING: 5759333 GRID ZONE: 13U

Occurrence ID: 12616 **First Observation:** 2006-09-07
Occurrence Class: Vascular Plant **Last Observation:** 2006-09-07
Scientific Name: Sambucus racemosa ssp. pubens
Common Name: Red Elderberry
Occurrence Rank: D - Poor estimated viability
General Description:
Occurrence Data: LOCATION INFORMATION: SITE NAME: Highway 219 (south of Saskatoon, SK). DIRECTIONS TO POPULATION (include descriptions of landmarks and distances if possible): Highway 219 south of Saskatoon at Beaver Creek on west side of highway, south bank. UTM EASTING: 382887 UTM NORTHING: 5760042 GRID ZONE: 13U NORTH AMERICAN DATUM: 27 / 83 (circle one). LEGAL: TWP: 35RGE: 5W: 3 M SECTION: 6 LSD: NE Was the location determined using a GPS? Y / N POPULATION and PHENOLOGY INFORMATION (include information on population area, number of individuals): 1 shrub. Plant with mature fruit. SITE/HABITAT DESCRIPTION (include information on habitat, plant communities / dominant species / associated species / other rare species / substrate / soils / phenology of dominant species): South bank of Beaver Creek in sandy substrate. Associated with: Salix exigua, Glycyrrhiza lepidota, Cirsium arvense. ASPECT: NSLOPE: ~20% MOISTURE: Hygric (wetter in the spring). OWNERSHIP (if known. Include name/address/phone number): A.E. Wing, Saskatoon. HABITAT THREATS/MANAGEMENT CONCERNS: Highway 219 improvements and widening.
Directions: Highway 219 south of Saskatoon at Beaver Creek on west side of highway, south bank. SITE 1. UTM EASTING: 382887 UTM NORTHING: 5760042 GRID ZONE: 13U NORTH AMERICAN DATUM 83 LEGAL: TWP: 35, RGE: 5, W: 3M, SECTION: 6 LSD: NE

Occurrence ID: 14897 **First Observation:** 1919-09-30
Occurrence Class: Vascular Plant **Last Observation:** 1970-08-31
Scientific Name: Corispermum americanum var. americanu
Common Name: American Bugseed
Occurrence Rank: H - Historical
General Description:
Occurrence Data: 1919 - species observed in 1 site. 1970 - species observed in 1 site
Directions:

Occurrence ID: 16083 **First Observation:** 1921-05-09
Occurrence Class: Vascular Plant **Last Observation:** 1921-05-09
Scientific Name: Corispermum hookeri var. hookeri
Common Name: Hooker's Bugseed
Occurrence Rank: H - Historical
General Description:
Occurrence Data: 1921- species observed in 1 site
Directions: Saskatoon

Occurrence ID: 16084 **First Observation:** 1937-09-09
Occurrence Class: Vascular Plant **Last Observation:** 1992-08-30
Scientific Name: Corispermum hookeri var. hookeri
Common Name: Hooker's Bugseed
Occurrence Rank: E - Verified extant (viability not assessed)
General Description:
Occurrence Data: 1937- species observed in 1 site 1992- species observed in 1 site
Directions:

Occurrence ID: 16097 **First Observation:** 1992-08-30
Occurrence Class: Vascular Plant **Last Observation:** 1992-08-30
Scientific Name: Corispermum pallasii
Common Name: Pallas' Bugseed
Occurrence Rank: BC - Good or fair estimated viability
General Description:
Occurrence Data: 1992- locally abundant in 1 site
Directions: Saskatoon

Occurrence ID: 16098 **First Observation:** 1936-09-09
Occurrence Class: Vascular Plant **Last Observation:** 2019-10-13
Scientific Name: Corispermum pallasii
Common Name: Pallas' Bugseed
Occurrence Rank: E - Verified extant (viability not assessed)
General Description:
Occurrence Data: 1936 - species observed in 1 site 2019 - 1 plant in 1 site
Directions: Beaver Creek

Occurrence ID: 16106 **First Observation:** 1933-08-22
Occurrence Class: Vascular Plant **Last Observation:** 1992-08-06
Scientific Name: Corispermum villosum
Common Name: Hairy Bugseed
Occurrence Rank: E - Verified extant (viability not assessed)
General Description:
Occurrence Data: 1933 - species observed in 1 site 1992 - species observed in 1 site
Directions:

Occurrence ID: 16244 **First Observation:** 1977-08-17
Occurrence Class: Vascular Plant **Last Observation:** 1977-08-17
Scientific Name: Corispermum villosum
Common Name: Hairy Bugseed
Occurrence Rank: E - Verified extant (viability not assessed)
General Description:
Occurrence Data: 1977 - species observed in 1 site
Directions: Beaver Creek

Occurrence ID: 16694 **First Observation:** 1938-05-19
Occurrence Class: Vascular Plant **Last Observation:** 1938-05-19
Scientific Name: Ribes oxyacanthoides var. setosum
Common Name: Bristly Gooseberry
Occurrence Rank: H - Historical
General Description:
Occurrence Data: 1938 - species observed in 1 site
Directions: Saskatoon Beaver Creek

Occurrence ID: 16698 **First Observation:** 1927
Occurrence Class: Vascular Plant **Last Observation:** 1938
Scientific Name: Ribes oxyacanthoides var. setosum
Common Name: Bristly Gooseberry
Occurrence Rank: H - Historical
General Description:
Occurrence Data: 1927-1938, species observed in multiple sites
Directions: Saskatoon

Occurrence ID: 16750 **First Observation:** 1915-05-30
Occurrence Class: Vascular Plant **Last Observation:** 1915-05-30
Scientific Name: Sisyrinchium mucronatum
Common Name: Mucronate Blue-eyed-grass
Occurrence Rank: H - Historical
General Description:
Occurrence Data: 1915 - species observed in 1 site
Directions: Saskatoon

Occurrence ID: 16752 **First Observation:** 1975-06-15
Occurrence Class: Vascular Plant **Last Observation:** 1975-06-15
Scientific Name: Sisyrinchium mucronatum
Common Name: Mucronate Blue-eyed-grass
Occurrence Rank: BC - Good or fair estimated viability
General Description:
Occurrence Data: 1975 - species observed in 1 site
Directions: Haultain

Occurrence ID: 16762 **First Observation:** 1958-08-15
Occurrence Class: Vascular Plant **Last Observation:** 1958-08-15
Scientific Name: Sisyrinchium septentrionale
Common Name: Northern Blue-eyed-grass
Occurrence Rank: H - Historical
General Description:
Occurrence Data: 1958 - species observed in 1 site
Directions: Floral

Occurrence ID: 16786 **First Observation:** 1939-07-10
Occurrence Class: Vascular Plant **Last Observation:** 1939-07-10
Scientific Name: Achnatherum nelsonii ssp. dorei
Common Name: Columbia Needlegrass
Occurrence Rank: H - Historical
General Description:
Occurrence Data: 1939 - species observed in 1 site
Directions: Beaver Creek

Occurrence ID: 16876 **First Observation:** 1938-07-10
Occurrence Class: Vascular Plant **Last Observation:** 1938-07-10
Scientific Name: Achnatherum nelsonii ssp. dorei
Common Name: Columbia Needlegrass
Occurrence Rank: H - Historical
General Description:
Occurrence Data: 1938 - species observed in 1 site
Directions: Saskatoon

Occurrence ID: 16950 **First Observation:** 1992-08-04
Occurrence Class: Vascular Plant **Last Observation:** 1992-08-04
Scientific Name: Potentilla supina ssp. paradoxa
Common Name: Bushy Cinquefoil
Occurrence Rank: B - Good estimated viability
General Description:
Occurrence Data: 1992 - species collected - S Sask River "CNR spit marsh"
Directions: Saskatoon

Occurrence ID: 17163 **First Observation:** 1952-08-12
Occurrence Class: Vascular Plant **Last Observation:** 1952-08-12
Scientific Name: Amphiscirpus nevadensis
Common Name: Nevada Bulrush
Occurrence Rank: H - Historical
General Description:
Occurrence Data: 1952 - occasional in 1 site
Directions: Haultain SW3-35-5-W3

Occurrence ID: 17173 **First Observation:** 1927-06-30
Occurrence Class: Vascular Plant **Last Observation:** 1937-06-16
Scientific Name: Carex saximontana
Common Name: Rocky Mountain Sedge
Occurrence Rank: H - Historical
General Description:
Occurrence Data: 1927, 1932, 1936, 1937 specimens collected
Directions: Saskatoon

Occurrence ID: 17407 **First Observation:** 1903
Occurrence Class: Vascular Plant **Last Observation:** 1903
Scientific Name: Samolus parviflorus
Common Name: Water Pimpernel
Occurrence Rank: H - Historical
General Description:
Occurrence Data: 1903 specimen collected
Directions: Saskatoon river floodplain

Occurrence ID: 21614 **First Observation:** 1920-07-13
Occurrence Class: Vascular Plant **Last Observation:** 1920-07-13
Scientific Name: Crepis runcinata ssp. hispidulosa
Common Name: Smooth Hawk's-beard
Occurrence Rank: H - Historical
General Description:
Occurrence Data: 1920 - collected in 1 site
Directions:

Occurrence ID: 999942860 **First Observation:** 2010-08-11
Occurrence Class: Vascular Plant **Last Observation:** 2010-08-11
Scientific Name: Bidens frondosa
Common Name: Tall Bur-marigold
Occurrence Rank:
General Description: 18 plants (2010)
Occurrence Data:
Directions: Beaver Creek, SK

Occurrence ID: 999942861 **First Observation:** 2010-08-11
Occurrence Class: Vascular Plant **Last Observation:** 2010-08-11
Scientific Name: Bidens frondosa
Common Name: Tall Bur-marigold
Occurrence Rank:
General Description: 6 plants (2010)
Occurrence Data:
Directions: Beaver Creek, SK

Occurrence ID: 999942862 **First Observation:** 2010-08-11
Occurrence Class: Vascular Plant **Last Observation:** 2010-08-11
Scientific Name: Bidens frondosa
Common Name: Tall Bur-marigold
Occurrence Rank:
General Description: 15+ plants (2010)
Occurrence Data:
Directions: Beaver Creek, SK

Occurrence ID: 999942863 **First Observation:** 2010-08-11
Occurrence Class: Vascular Plant **Last Observation:** 2010-08-11
Scientific Name: Bidens frondosa
Common Name: Tall Bur-marigold
Occurrence Rank:
General Description: 20+ plants (2010)
Occurrence Data:
Directions: Beaver Creek, SK

Occurrence ID: 999942864 **First Observation:** 2010-08-11
Occurrence Class: Vascular Plant **Last Observation:** 2010-08-11
Scientific Name: Bidens frondosa
Common Name: Tall Bur-marigold
Occurrence Rank:
General Description: 10+ plants (2010)
Occurrence Data:
Directions: Beaver Creek, SK

Occurrence ID: 999942865 **First Observation:** 2010-08-11
Occurrence Class: Vascular Plant **Last Observation:** 2010-08-11
Scientific Name: Bidens frondosa
Common Name: Tall Bur-marigold
Occurrence Rank:
General Description: 35 plants (2010)
Occurrence Data:
Directions: Beaver Creek, SK

Occurrence ID: 999942866 **First Observation:** 2010-08-11
Occurrence Class: Vascular Plant **Last Observation:** 2010-08-11
Scientific Name: Bidens frondosa
Common Name: Tall Bur-marigold
Occurrence Rank:
General Description: 1000+ plants (2010)
Occurrence Data:
Directions: Beaver Creek, SK

Occurrence ID: 999942867 **First Observation:** 2010-08-11
Occurrence Class: Vascular Plant **Last Observation:** 2010-08-11
Scientific Name: Bidens frondosa
Common Name: Tall Bur-marigold
Occurrence Rank:
General Description: 70 plants (2010)
Occurrence Data:
Directions: Beaver Creek, SK

Occurrence ID: 999942868 **First Observation:** 2011-08-30
Occurrence Class: Vascular Plant **Last Observation:** 2011-08-30
Scientific Name: Bidens frondosa
Common Name: Tall Bur-marigold
Occurrence Rank:
General Description: 1 plants (2011)
Occurrence Data:
Directions: Brightwater Creek, SK

Occurrence ID: 999942869 **First Observation:** 2011-08-30
Occurrence Class: Vascular Plant **Last Observation:** 2011-08-30
Scientific Name: Bidens frondosa
Common Name: Tall Bur-marigold
Occurrence Rank:
General Description: 2 plants (2011)
Occurrence Data:
Directions: Brightwater Creek, SK

Occurrence ID: 999942870 **First Observation:** 2011-08-30
Occurrence Class: Vascular Plant **Last Observation:** 2011-08-30
Scientific Name: Bidens frondosa
Common Name: Tall Bur-marigold
Occurrence Rank:
General Description: 1 plants (2011)
Occurrence Data:
Directions: Brightwater Creek, SK

Occurrence ID: 999942938 **First Observation:** 2010-09-23
Occurrence Class: Vascular Plant **Last Observation:** 2010-09-23
Scientific Name: Sambucus racemosa ssp. pubens
Common Name: Red Elderberry
Occurrence Rank:
General Description: 5 plants (2010)
Occurrence Data:
Directions: Highway 219, SK

Occurrence ID: 999942939 **First Observation:** 2010-09-23
Occurrence Class: Vascular Plant **Last Observation:** 2010-09-23
Scientific Name: Sambucus racemosa ssp. pubens
Common Name: Red Elderberry
Occurrence Rank:
General Description: 10 plants (2010)
Occurrence Data:
Directions: Highway 219, SK

Occurrence ID: 999942940 **First Observation:** 2010-09-23
Occurrence Class: Vascular Plant **Last Observation:** 2010-09-23
Scientific Name: Sambucus racemosa ssp. pubens
Common Name: Red Elderberry
Occurrence Rank:
General Description: 2 plants (2010)
Occurrence Data:
Directions: Highway 219, SK

Occurrence ID: 999958933 **First Observation:** unknown
Occurrence Class: Vascular Plant **Last Observation:** unknown
Scientific Name: Viola pedatifida
Common Name: Crowfoot Violet
Occurrence Rank:
General Description: no date
Occurrence Data:
Directions: Beaver Creek

Occurrence ID: 999959009 **First Observation:** 2011-06-12
Occurrence Class: Vascular Plant **Last Observation:** 2011-06-12
Scientific Name: Viola pedatifida
Common Name: Crowfoot Violet
Occurrence Rank:
General Description: 25 plants - 2011
Occurrence Data:
Directions: SSask River Valley

Occurrence ID: 999969035 **First Observation:** 1915-07-29
Occurrence Class: Vascular Plant **Last Observation:** 1915-07-29
Scientific Name: Monarda fistulosa var. mollis
Common Name: Soft Wild Bergamot
Occurrence Rank:
General Description: specimen collected (1915)
Occurrence Data:
Directions: Saskatoon

Occurrence ID: 999969037 **First Observation:** 1930-07-30
Occurrence Class: Vascular Plant **Last Observation:** 1930-07-30
Scientific Name: Monarda fistulosa var. mollis
Common Name: Soft Wild Bergamot
Occurrence Rank:
General Description: specimen collected (1930)
Occurrence Data:
Directions: Saskatoon

Occurrence ID: 999973204 **First Observation:** 1972-07-05
Occurrence Class: Vascular Plant **Last Observation:** 1972-07-05
Scientific Name: Festuca hallii
Common Name: Plains Rough Fescue
Occurrence Rank:
General Description: specimen collected (1972)
Occurrence Data:
Directions: Saskatoon SE1-35-6-W3

Occurrence ID: 999973282 **First Observation:** 1992-06-18
Occurrence Class: Vascular Plant **Last Observation:** 1992-06-18
Scientific Name: Festuca hallii
Common Name: Plains Rough Fescue
Occurrence Rank:
General Description: specimen collected (1992)
Occurrence Data:
Directions: Cranberry Flats Conservation Area 2,5,6,7,8-30-35-5-W3

Occurrence ID: 999973907 **First Observation:** 1977-09-08
Occurrence Class: Vascular Plant **Last Observation:** 1977-09-08
Scientific Name: Chenopodium desiccatum
Common Name: Dry Goosefoot
Occurrence Rank:
General Description: specimen collected (1977)
Occurrence Data:
Directions: Beaver Creek Park

Occurrence ID: 999974023 **First Observation:** 1996-08-15
Occurrence Class: Vascular Plant **Last Observation:** 1996-08-15
Scientific Name: Elymus lanceolatus ssp. psammophilus
Common Name: Sand-dune Wheatgrass
Occurrence Rank:
General Description: specimen collected (1996)
Occurrence Data:
Directions: Dundurn Sand Hills, Cranberry site.

Occurrence ID: 999974056 **First Observation:** 2006-09-07
Occurrence Class: Vascular Plant **Last Observation:** 2006-09-07
Scientific Name: Bidens frondosa
Common Name: Tall Bur-marigold
Occurrence Rank:
General Description: specimen collected (2006)
Occurrence Data:
Directions: Highway 219 project. Beaver Creek and Highway 219. Near Saskatoon.

Occurrence ID: 999974298 **First Observation:** 1996-09-01
Occurrence Class: Vascular Plant **Last Observation:** 1996-09-01
Scientific Name: Bidens frondosa
Common Name: Tall Bur-marigold
Occurrence Rank:
General Description: specimen collected (1996)
Occurrence Data:
Directions: Saskatoon: E shore of South Saskatchewan River, N of spit to ca. 50 m S of CNR bridge, just S of city limits.

Occurrence ID: 999974352 **First Observation:** 1995-09-03
Occurrence Class: Vascular Plant **Last Observation:** 1995-09-03
Scientific Name: Erigeron strigosus var. strigosus
Common Name: Daisy Fleabane
Occurrence Rank:
General Description: specimen collected (1995)
Occurrence Data:
Directions: Beaver Creek Natural Park. Ca 12 km S of Saskatoon, along meandering Beaver Creek, ca 1 km above creek mouth on South Saskatchewan River

---

Occurrence ID: 999974512 **First Observation:** 1993-06-01
Occurrence Class: Vascular Plant **Last Observation:** 1993-06-01
Scientific Name: Carex eburnea
Common Name: Bristle-leaved Sedge
Occurrence Rank:
General Description: specimen collected (1993)
Occurrence Data:
Directions: "The Rifle Range". South of Saskatoon. South end. East shore of South Saskatchewan River. Ca. 2.5 miles south of Saskatoon. Just NW of RiversideGolf

---

Occurrence ID: 999974515 **First Observation:** 1993-08-03
Occurrence Class: Vascular Plant **Last Observation:** 1993-08-03
Scientific Name: Carex eburnea
Common Name: Bristle-leaved Sedge
Occurrence Rank:
General Description: specimen collected (1993)
Occurrence Data:
Directions: South Central Saskatoon. Diefenbaker Park Area. East shore bluff slopes of South Saskatchewan River. North of CNRR bridge.

Occurrence ID: 999974649 **First Observation:** 2001-06-13
Occurrence Class: Vascular Plant **Last Observation:** 2001-06-13
Scientific Name: Astragalus australis var. glabriusculus
Common Name: Southern Milk-vetch
Occurrence Rank:
General Description: few in immediate area (2001)
Occurrence Data:
Directions: 5km S of Saskatoon

Occurrence ID: 999976543 **First Observation:** unknown
Occurrence Class: Vascular Plant **Last Observation:** unknown
Scientific Name: Carex eburnea
Common Name: Bristle-leaved Sedge
Occurrence Rank:
General Description: specimen collected (1900)
Occurrence Data:
Directions: Wilson Island, in South Saskatchewan River channel. Off Cranberry Flats Recreational Area. Ca. 4 miles south of Saskatoon city limits.

Occurrence ID: 999988322 **First Observation:** 2018-05-25
Occurrence Class: Vascular Plant **Last Observation:** 2018-05-25
Scientific Name: Viola pedatifida
Common Name: Crowfoot Violet
Occurrence Rank:
General Description: Species observed (2018)
Occurrence Data:
Directions: Beaver Creek

Occurrence ID: 999988323 **First Observation:** 2018-05-25
Occurrence Class: Vascular Plant **Last Observation:** 2018-05-25
Scientific Name: Viola pedatifida
Common Name: Crowfoot Violet
Occurrence Rank:
General Description: Species observed (2018)
Occurrence Data:
Directions: Beaver Creek

Occurrence ID: 999988324 **First Observation:** 2018-05-25
Occurrence Class: Vascular Plant **Last Observation:** 2018-05-25
Scientific Name: Viola pedatifida
Common Name: Crowfoot Violet
Occurrence Rank:
General Description: Species observed (2018)
Occurrence Data:
Directions: Beaver Creek

Occurrence ID: 999988325 **First Observation:** 2018-05-25
Occurrence Class: Vascular Plant **Last Observation:** 2018-05-25
Scientific Name: Viola pedatifida
Common Name: Crowfoot Violet
Occurrence Rank:
General Description: Species observed (2018)
Occurrence Data:
Directions: Beaver Creek

Occurrence ID: 999988389 **First Observation:** 2018-05-25
Occurrence Class: Vascular Plant **Last Observation:** 2018-05-25
Scientific Name: Viola pedatifida
Common Name: Crowfoot Violet
Occurrence Rank:
General Description: Species observed (2018)
Occurrence Data:
Directions: Beaver Creek

Occurrence ID: 999988390 **First Observation:** 2018-05-25
Occurrence Class: Vascular Plant **Last Observation:** 2018-05-25
Scientific Name: Viola pedatifida
Common Name: Crowfoot Violet
Occurrence Rank:
General Description: Species observed (2018)
Occurrence Data:
Directions: Beaver Creek

Occurrence ID: 999988391 **First Observation:** 2018-05-25
Occurrence Class: Vascular Plant **Last Observation:** 2018-05-25
Scientific Name: Viola pedatifida
Common Name: Crowfoot Violet
Occurrence Rank:
General Description: Species observed (2018)
Occurrence Data:
Directions: Beaver Creek

Occurrence ID: 999988392 **First Observation:** 2018-05-25
Occurrence Class: Vascular Plant **Last Observation:** 2018-05-25
Scientific Name: Viola pedatifida
Common Name: Crowfoot Violet
Occurrence Rank:
General Description: Species observed (2018)
Occurrence Data:
Directions: Beaver Creek

Occurrence ID: 999988393 **First Observation:** 2018-05-25
Occurrence Class: Vascular Plant **Last Observation:** 2018-05-25
Scientific Name: Viola pedatifida
Common Name: Crowfoot Violet
Occurrence Rank:
General Description: Species observed (2018)
Occurrence Data:
Directions: Beaver Creek

Occurrence ID: 999988394 **First Observation:** 2018-05-25
Occurrence Class: Vascular Plant **Last Observation:** 2018-05-25
Scientific Name: Viola pedatifida
Common Name: Crowfoot Violet
Occurrence Rank:
General Description: Species observed (2018)
Occurrence Data:
Directions: Beaver Creek

Occurrence ID: 999988395 **First Observation:** 2018-05-25
Occurrence Class: Vascular Plant **Last Observation:** 2018-05-25
Scientific Name: Viola pedatifida
Common Name: Crowfoot Violet
Occurrence Rank:
General Description: Species observed (2018)
Occurrence Data:
Directions: Beaver Creek

Occurrence ID: 999988396 **First Observation:** 2018-05-25
Occurrence Class: Vascular Plant **Last Observation:** 2018-05-25
Scientific Name: Viola pedatifida
Common Name: Crowfoot Violet
Occurrence Rank:
General Description: Species observed (2018)
Occurrence Data:
Directions: Beaver Creek

Occurrence ID: 999988397 **First Observation:** 2018-05-25
Occurrence Class: Vascular Plant **Last Observation:** 2018-05-25
Scientific Name: Viola pedatifida
Common Name: Crowfoot Violet
Occurrence Rank:
General Description: Species observed (2018)
Occurrence Data:
Directions: Beaver Creek

Occurrence ID: 999988398 **First Observation:** 2018-05-25
Occurrence Class: Vascular Plant **Last Observation:** 2018-05-25
Scientific Name: Viola pedatifida
Common Name: Crowfoot Violet
Occurrence Rank:
General Description: Species observed (2018)
Occurrence Data:
Directions: Beaver Creek

Occurrence ID: 999988399 **First Observation:** 2018-05-25
Occurrence Class: Vascular Plant **Last Observation:** 2018-05-25
Scientific Name: Viola pedatifida
Common Name: Crowfoot Violet
Occurrence Rank:
General Description: Species observed (2018)
Occurrence Data:
Directions: Beaver Creek

Occurrence ID: 999988400 **First Observation:** 2018-05-25
Occurrence Class: Vascular Plant **Last Observation:** 2018-05-25
Scientific Name: Viola pedatifida
Common Name: Crowfoot Violet
Occurrence Rank:
General Description: Species observed (2018)
Occurrence Data:
Directions: Beaver Creek

Occurrence ID: 999988480 **First Observation:** 2018-06-19
Occurrence Class: Vascular Plant **Last Observation:** 2018-06-19
Scientific Name: Festuca hallii
Common Name: Plains Rough Fescue
Occurrence Rank:
General Description: Species observed (2018)
Occurrence Data:
Directions: Beaver Creek Conservation Area

Occurrence ID: 999988481 **First Observation:** 2018-05-25
Occurrence Class: Vascular Plant **Last Observation:** 2018-05-25
Scientific Name: Festuca hallii
Common Name: Plains Rough Fescue
Occurrence Rank:
General Description: Species observed (2018)
Occurrence Data:
Directions: Beaver Creek Conservation Area

Occurrence ID: 9999106959 **First Observation:** 2019-10-13
Occurrence Class: Vascular Plant **Last Observation:** 2019-10-13
Scientific Name: Corispermum americanum var. americanu
Common Name: American Bugseed
Occurrence Rank:
General Description: 1 plant (2019).
Occurrence Data:
Directions: Beaver Creek Conservation Area. ID BC-CS2

Occurrence ID: 9999123077 **First Observation:** 2011-06-12
Occurrence Class: Vascular Plant **Last Observation:** 2011-06-12
Scientific Name: Viola pedatifida
Common Name: Crowfoot Violet
Occurrence Rank:
General Description: 25 Individual(s) (Count); (2011)
Occurrence Data:
Directions:

Occurrence ID: 9999123096 **First Observation:** 2019-05-22
Occurrence Class: Vascular Plant **Last Observation:** 2019-05-22
Scientific Name: Festuca hallii
Common Name: Plains Rough Fescue
Occurrence Rank:
General Description: Species Detected; (2019)
Occurrence Data:
Directions:

Occurrence ID: 9999123230 **First Observation:** 2018-06-13
Occurrence Class: Vascular Plant **Last Observation:** 2018-06-13
Scientific Name: Elymus lanceolatus ssp. psammophilus
Common Name: Sand-dune Wheatgrass
Occurrence Rank:
General Description: Species Detected; (2018)
Occurrence Data:
Directions: NE-12-33-5-3

Occurrence ID: 9999138340 **First Observation:** 2017-09-01
Occurrence Class: Vascular Plant **Last Observation:** 2017-09-01
Scientific Name: Potentilla lasiodonta
Common Name: Sandhills Cinquefoil
Occurrence Rank:
General Description: Species Detected; (2017)
Occurrence Data:
Directions: Division No. 11, SK, Canada

Occurrence ID: 9999138341 **First Observation:** 2019-08-30
Occurrence Class: Vascular Plant **Last Observation:** 2019-08-30
Scientific Name: Orobanche ludoviciana
Common Name: Louisiana Broom-rape
Occurrence Rank:
General Description: Species Detected; (2019)
Occurrence Data:
Directions: Division No. 11, SK, Canada

Occurrence ID: 9999140804 **First Observation:** 2022-09-01
Occurrence Class: Vascular Plant **Last Observation:** 2022-09-01
Scientific Name: Corispermum americanum var. americanu
Common Name: American Bugseed
Occurrence Rank:
General Description: 50 Individual(s) (Estimate); (2022)
Occurrence Data:
Directions:

Occurrence ID: 9999140803 **First Observation:** 2022-09-01
Occurrence Class: Vascular Plant **Last Observation:** 2022-09-01
Scientific Name: Corispermum americanum var. americanu
Common Name: American Bugseed
Occurrence Rank:
General Description: 10 Individual(s) (Estimate); (2022)
Occurrence Data:
Directions:

Occurrence ID: 9999140802 **First Observation:** 2022-09-01
Occurrence Class: Vascular Plant **Last Observation:** 2022-09-01
Scientific Name: Corispermum americanum var. americanu
Common Name: American Bugseed
Occurrence Rank:
General Description: 25 Individual(s) (Estimate); (2022)
Occurrence Data:
Directions:

Project Screening Report

Wild Species Research Permitting

A Research Permit is required to detect or observe plants or wildlife for commercial purposes, such as pre-screening surveys to collect baseline data or other activities, or to conduct academic research. Research Permits are not required if you are doing surveys for personal, recreational, educational or other non-commercial purposes. Revisions were made to Section 21 of The Wildlife Act in 2015 and to Section 6.2 of The Wildlife Regulations in 2016.

See the Government of Saskatchewan Wild Species Research Permitting page for more information.

All forms and related information pertaining to Research Permits can be found in the Publications Centre. Be sure to check out the Conservation Standards Terms and Conditions for Research Permits for general, wildlife and research-specific and information submission conditions that pertain to all research permits.

Subscribe to our Mail-out List Subscriptions for updates regarding Species Detection Permits, SKCDC Lists and Ranks, Legislation and Policy and HABISask.

Species Detection Survey Protocols

The Species Detection Survey Protocols are used to detect rare and sensitive species so Activity Restriction Guidelines can be applied. Their use is required by industry/ environmental consultants for proposed or existing commercial activities.

Activity Restriction Guidelines for Sensitive Species

The Activity Restriction Guidelines for Sensitive Species outline restricted activity periods and distance setbacks for rare and sensitive species to assist proponents in minimizing impacts to rare and sensitive species and habitats.

Administrative Areas

District 8	Ecological Management Specialist (EMS) District(s)
District 6	Ecological Management Specialist (EMS) District(s)
District 7	Ecological Management Specialist (EMS) District(s)
Saskatoon	Compliance and Field Services Area(s)
Saskatoon	Compliance and Field Services Region(s)
Saskatoon	Area Fisheries Ecologist Area(s)
Saskatchewan River	Area Fisheries Ecologist Area(s)
PARKLAND REGION	Area Wildlife Ecologist(s)
343 - BLUCHER	Rural Municipality
345 - VANSCOY	Rural Municipality
314 - DUNDURN	Rural Municipality
344 - CORMAN PARK	Rural Municipality
GRASSWOODS INDIAN RESERVE 192J	First Nation Reserve
District 10	AG Crown Land Management Specialist District
District 9	AG Crown Land Management Specialist District

Contact Us

For more information, please contact our Client Service Office:
Email: centre.inquiry@gov.sk.ca
Tel (toll free in North America): 1-800-567-4224
Tel (Regina): 306-787-2584

Appendix B Expected Plant SOCC within the Moose Wood Sandhills Landscape Area

Table B.1 Expected Plant SOCC within the Moose Wood Sandhills Landscape Area

Scientific Name	Common Name	Family	S-Rank	COSEWIC Status	SARA Status	Wildlife Species at Risk Regulations
Botrychium minganense	mingan moonwort	Ophioglossaceae	S1	-	-	-
Ambrosia acanthicarpa	bur ragweed	Asteraceae	S2	-	-	-
Antennaria dimorpha	low pussytoes	Asteraceae	S3	-	-	-
Bidens beckii	water-marigold	Asteraceae	S2	-	-	-
Bidens frondosa	tall bur-marigold	Asteraceae	S3	-	-	-
Cirsium drummondii	short-stemmed thistle	Asteraceae	S3	-	-	-
Crepis runcinata ssp. *hispidulosa*	smooth hawk's-beard	Asteraceae	S1	-	-	-
Erigeron strigosus var. *strigosus*	daisy fleabane	Asteraceae	S3	-	-	-
Shinnersoseris rostrata	beaked annual skeleton-weed	Asteraceae	S2	-	-	-
Impatiens noli-tangere	yellow touch-me-not	Balsaminaceae	S2	-	-	-
Cardamine nymanii	meadow bitter cress	Brassicaceae	S3	-	-	-
Sambucus racemosa ssp. pubens	red elderberry	Caprifoliaceae	S2	-	-	-
Silene menziesii	Menzies' catchfly	Caryophyllaceae	S3	-	-	-
Chenopodium desiccatum	dry goosefoot	Chenopodiaceae	S3	-	-	-
Chenopodium subglabrum	smooth goosefoot	Chenopodiaceae	S3	Threatened	Threatened	-
Corispermum americanum var. *americanum*	American bugseed	Chenopodiaceae	S3	-	-	-
Corispermum hookeri var. *hookeri*	Hooker's bugseed	Chenopodiaceae	S2	-	-	-

Scientific Name	Common Name	Family	S-Rank	COSEWIC Status	SARA Status	Wildlife Species at Risk Regulations
Corispermum pallasii	Pallas' bugseed	Chenopodiaceae	S2	-	-	-
Corispermum villosum	hairy bugseed	Chenopodiaceae	S2	-	-	-
Astragalus australis var. *glabriusculus*	southern milk-vetch	Fabaceae	S3	-	-	-
Dalea villosa var. *villosa*	hairy prairie clover	Fabaceae	S2	Special Concern	Special Concern	Endangered
Lupinus pusillus ssp. *pusillus*	small lupine	Fabaceae	S3	-	-	-
Gentiana fremontii	moss gentian	Gentianaceae	S3	-	-	-
Ribes oxyacanthoides var. *setosum*	bristly gooseberry	Grossulariaceae	S2	-	-	-
Monarda fistulosa var. *mollis*	soft wild bergamot	Lamiaceae	S3	-	-	-
Oenothera caespitosa ssp. *caespitosa*	gumbo evening primrose	Onagraceae	S3	-	-	-
Orobanche ludoviciana	Louisiana broom-rape	Orobanchaceae	S3	-	-	-
Polygala alba	white milkwort	Polygalaceae	S3	-	-	-
Samolus parviflorus	water pimpernel	Primulaceae	SH	-	-	-
Potentilla effusa var. *effusa*	branched cinquefoil	Rosaceae	S3	-	-	-
Potentilla lasiodonta	sandhills cinquefoil	Rosaceae	S2	-	-	-
Potentilla rubricaulis	red-stemmed cinquefoil	Rosaceae	S3	-	-	-
Potentilla supina ssp. *paradoxa*	bushy cinquefoil	Rosaceae	S3	-	-	-
Viola pedatifida	crowfoot violet	Violaceae	S3	-	-	-
Alisma gramineum	narrow-leaved water plantain	Alismataceae	S3	-	-	-
Blysmopsis rufa	red bulrush	Cyperaceae	S3	-	-	-

Scientific Name	Common Name	Family	S-Rank	COSEWIC Status	SARA Status	Wildlife Species at Risk Regulations
Carex eburnea	bristle-leaved sedge	Cyperaceae	S3	-	-	-
Carex hystericina	porcupine sedge	Cyperaceae	S3	-	-	-
Carex saximontana	rocky mountain sedge	Cyperaceae	S3	-	-	-
Cyperus schweinitzii	Schweinitz's flatsedge	Cyperaceae	S3	-	-	-
Eleocharis elliptica	slender spike-rush	Cyperaceae	S3	-	-	-
Eleocharis engelmannii	Engelmann's spike-rush	Cyperaceae	S3	-	-	-
Amphiscirpus nevadensis	Nevada bulrush	Cyperaceae	S3	-	-	-
Scirpus pallidus	pale bulrush	Cyperaceae	S3	-	-	-
Sisyrinchium mucronatum	mucronate blue-eyed-grass	Iridaceae	S3	-	-	-
Sisyrinchium septentrionale	northern blue-eyed-grass	Iridaceae	S3	-	-	-
Allium cernuum	nodding onion	Liliaceae	S3	-	-	-
Najas flexilis	flexible naiad	Najadaceae	S3	-	-	-
Corallorhiza striata var. *striata*	striped coral-root	Orchidaceae	S3	-	-	-
Platanthera dilatata var. *dilatata*	scentbottle	Orchidaceae	S3	-	-	-
Achnatherum nelsonii ssp. *dorei*	Columbia needlegrass	Poaceae	S3	-	-	-
Elymus glaucus ssp. *glaucus*	blue wild rye	Poaceae	S3	-	-	-
Elymus lanceolatus ssp. *psammophilus*	sand-dune wheatgrass	Poaceae	S2	-	-	-
Festuca hallii	plains rough fescue	Poaceae	S3	-	-	-
Festuca idahoensis	Idaho fescue	Poaceae	S2	-	-	-

Scientific Name	Common Name	Family	S-Rank	COSEWIC Status	SARA Status	Wildlife Species at Risk Regulations
Muhlenbergia mexicana	wood muhly	Poaceae	SH	-	-	-
Sporobolus neglectus	small dropseed	Poaceae	S2	-	-	-
Potamogeton strictifolius	upright narrow-leaved pondweed	Potamogetonaceae	S3	-	-	-

Note:

"-" = not applicable

Source: Tracked Vascular Plant Species by Ecoregion and Landscape Area (SKCDC. 2022). Tracked Vascular Plant Species by Ecoregion and Landscape Area. Regina, Saskatchewan. http://biodiversity.sk.ca/SppList.htm. Accessed April 2023.

Appendix C Expected Plant SOCC within the Elstow Plain Landscape Area

Table C.1 Expected Plant SOCC within the Elstow Plain Landscape Area

Scientific Name	Common Name	Family	S-Rank	COSEWIC Status	SARA Status	Wildlife Species at Risk Regulations
Amaranthus californicus	California amaranth	Amaranthaceae	S2	-	-	-
Cirsium drummondii	short-stemmed thistle	Asteraceae	S3	-	-	-
Lactuca biennis	tall blue lettuce	Asteraceae	S3	-	-	-
Hornungia procumbens	prostrate alpen-cress	Brassicaceae	S3	-	-	-
Rorippa curvipes	curved yellow-cress	Brassicaceae	S3	-	-	-
Silene menziesii	Menzies' catchfly	Caryophyllaceae	S3	-	-	-
Dalea villosa var. *villosa*	hairy prairie clover	Fabaceae	S2	Special Concern	Special Concern	Endangered
Ribes oxyacanthoides var. *setosum*	bristly gooseberry	Grossulariaceae	S2	-	-	-
Myosurus minimus	least mousetail	Ranunculaceae	S3	-	-	-
Potentilla anserina ssp. *yukonensis*	Yukon silverweed	Rosaceae	S2	-	-	-
Potentilla concinna var. *concinna*	early cinquefoil	Rosaceae	S2	-	-	-
Potentilla hudsonii	Hudson’s cinquefoil	Rosaceae	S2	-	-	-
Potentilla rubricaulis	red-stemmed cinquefoil	Rosaceae	S3	-	-	-
Rosa blanda	smooth wild rose	Rosaceae	S1	-	-	-
Castilleja coccinea	scarlet paintbrush	Scrophulariaceae	S1	-	-	-
Viola pedatifida	crowfoot violet	Violaceae	S3	-	-	-
Marsilea vestita	pepperwort	Marsileaceae	S3	-	-	-
Alisma gramineum	narrow-leaved water plantain	Alismataceae	S3	-	-	-
Blysmopsis rufa	red bulrush	Cyperaceae	S3	-	-	-
Carex eburnea	bristle-leaved sedge	Cyperaceae	S3	-	-	-
Cyperus strigosus	straw-colored umbrella-sedge	Cyperaceae	SH	-	-	-
Eleocharis engelmannii	Engelmann’s spike-rush	Cyperaceae	S3	-	-	-

Scientific Name	Common Name	Family	S-Rank	COSEWIC Status	SARA Status	Wildlife Species at Risk Regulations
Scirpus pallidus	pale bulrush	Cyperaceae	S3	-	-	-
Trichophorum pumilum	dwarf clubrush	Cyperaceae	S1	-	-	-
Elodea canadensis	Canada waterweed	Hydrocharitaceae	S3	-	-	-
Sisyrinchium septentrionale	northern blue-eyed-grass	Iridaceae	S3	-	-	-
Lilaea scilloides	flowering quillwort	Juncaginaceae	S2	-	-	-
Cypripedium parviflorum var. *makasin*	small yellow lady's slipper	Orchidaceae	S3	-	-	-
Cypripedium parviflorum var. *pubescens*	large yellow lady's-slipper	Orchidaceae	S2	-	-	-
Festuca hallii	plains rough fescue	Poaceae	S3	-	-	-

Note:

"-" = not applicable

Source: Tracked Vascular Plant Species by Ecoregion and Landscape Area (SKCDC. 2022). Tracked Vascular Plant Species by Ecoregion and Landscape Area. Regina, Saskatchewan. http://biodiversity.sk.ca/SppList.htm Accessed April 2023.

Appendix D Expected Plant SOCC within the Minichinas Upland Landscape Area

Table D.1 Expected Plant SOCC within the Minichinas Upland Landscape Area

Scientific Name	Common Name	Family	S-Rank	COSEWIC Status	SARA Status	Wildlife Species at Risk Regulations
Cirsium drummondii	short-stemmed thistle	Asteraceae	S3	-	-	-
Gentiana puberulenta	downy gentian	Gentianaceae	SH	-	-	-
Myosurus apetalus var. *montanus*	bristly mousetail	Ranunculaceae	S2	-	-	-
Myosurus minimus	least mousetail	Ranunculaceae	S3	-	-	-
Potentilla hudsonii	Hudson's cinquefoil	Rosaceae	S2	-	-	-
Potentilla rubricaulis	red-stemmed cinquefoil	Rosaceae	S3	-	-	-
Viola pedatifida	crowfoot violet	Violaceae	S3	-	-	-
Alisma gramineum	narrow-leaved water plantain	Alismataceae	S3	-	-	-
Carex crawei	Crawe's sedge	Cyperaceae	S3	-	-	-
Sisyrinchium mucronatum	mucronate blue-eyed-grass	Iridaceae	S3	-	-	-
Sisyrinchium septentrionale	northern blue-eyed-grass	Iridaceae	S3	-	-	-
Achnatherum nelsonii ssp. *dorei*	Columbia needlegrass	Poaceae	S3	-	-	-
Elymus lanceolatus ssp. psammophilus	sand-dune wheatgrass	Poaceae	S2	-	-	-
Festuca hallii	plains rough fescue	Poaceae	S3	-	-	-
Ruppia maritima	beaked ditch-grass	Ruppiaceae	S3	-	-	-

Note:

"-" = not applicable

Source: Tracked Vascular Plant Species by Ecoregion and Landscape Area (SKCDC. 2022). Tracked Vascular Plant Species by Ecoregion and Landscape Area. Regina, Saskatchewan. http://biodiversity.sk.ca/SppList.htm Accessed April 2023.

Appendix E Expected Wildlife SOCC

Table E.1 Expected Wildlife SOCC

Common Name	Scientific Name	Provincial Rank[1]	COSEWIC Status	SARA Status
Amphibians				
Canadian toad	*Anaxyrus hemiophrys*	S4	Not at Risk	None
plains spadefoot	*Spea bombifrons*	S3	Not at Risk	None
western tiger salamander	*Ambystoma mavortium*	S4	Special Concern	Special Concern
Birds				
American white pelican	*Pelecanus erythrorhynchos*	S5B	Not at Risk	-
Baird's sparrow[2,3]	*Ammodramus bairdii*	S4B	Special Concern	Special Concern
bald eagle	*Haliaeetus leucocephalus*	S5B, S5N, S4M	Not at Risk	-
barred owl	*Strix varia*	S3	-	-
black-crowned night-heron	*Nycticorax nycticorax*	S4B	-	-
burrowing owl[2,3]	*Athene cunicularia*	S2B	Endangered	Endangered
cattle egret	*Bubulcus ibis*	SNA	-	-
chestnut-collared longspur[2,3]	*Calcarius ornatus*	S3B	Endangered	Threatened
Clark's grebe[2]	*Aechmophorus clarkii*	S1B	-	-
common loon	*Gavia immer*	S5B, SUN	Not at Risk	-
Cooper's hawk	*Accipiter cooperii*	S4B, S2N, S2M	Not at Risk	-
double-crested cormorant	*Nannopterum auritum*	S5B	Not at Risk	-
eared grebe	*Podiceps nigricollis*	S5B	-	-
eastern whip-poor-will	*Antrostomus vociferus*	S1B	Special Concern	Threatened
eskimo curlew	*Numenius borealis*	SXB	Endangered	Endangered
evening grosbeak[2]	*Coccothraustes vespertinus*	S4	Special Concern	Special Concern
ferruginous hawk[2,3]	*Buteo regalis*	S3B	Special Concern	Threatened
great blue heron	*Ardea herodias*	S5B	-	-
great gray owl	*Strix nebulosa*	S3	Not at Risk	-
Harris's sparrow[4]	*Zonotrichia querula*	SUB, S5M	Special Concern	Special Concern
lark bunting[4]	*Calamospiza melanocorys*	S2B	Threatened	Threatened
long-billed curlew[2,3]	*Numenius americanus*	S3B	Special Concern	Special Concern
thick-billed longspur	*Rhynchophanes mccownii*	S3B	Threatened	Threatened
northern hawk owl	*Surnia ulula*	S3B, S5N	Not at Risk	-
peregrine falcon	*Falco peregrinus anatum*	S1B, SNRM	Not at Risk	-

Common Name	Scientific Name	Provincial Rank[1]	COSEWIC Status	SARA Status
piping plover[3] *circumcinctus* subspecies	*Charadrius melodus* ssp. *circumcinctus*	S3B	Endangered	Endangered
red knot *rufa* subspecies	*Calidris canutus* ssp. *rufa*	S2M	Endangered	Endangered
rusty blackbird	*Euphagus carolinus*	S3B,SUN	Special Concern	Special Concern
short-eared owl[2,3]	*Asio flammeus*	S3B,S2N	Threatened	Special Concern
Sprague's pipit[2,3]	*Anthus spragueii*	S3B	Threatened	Threatened
yellow rail[2]	*Coturnicops noveboracensis*	S3B	Special Concern	Special Concern
yellow-billed loon	*Gavia adamsii*	SNA	Not at Risk	-
Gull and tern nesting colonies (except ring-billed and California gulls)	-	-	-	-
Mammals				
American badger[3] *taxus* subspecies	*Taxidea taxus* ssp.*taxus*	S3	Special Concern	Special Concern
northern myotis	*Myotis septentrionalis*	S3	Endangered	Endangered
bat roosting/foraging sites	-	-	-	-
Invertebrates				
Ashton cuckoo bumble bee	*Bombus bohemicus*	S1	Endangered	Endangered
dusky dune moth	*Copablepharon longipenne longipenne*	S1	Threatened	Endangered
macropis cuckoo bee	*Epeoloides pilosulus*	SU	Endangered	Endangered
monarch	*Danaus plexippus plexippus*	S2B, SNRM	Endangered	Special Concern
Mormon metalmark	*Apodemia mormo*	S2	Special Concern	Special Concern
nine-spotted lady beetle	*Coccinella novemnotata*	S4	Endangered	Endangered
pale yellow dune moth	*Copablepharon grandis*	S2	Special Concern	Special Concern
Suckley's cuckoo bumble bee	*Bombus suckleyi*	S1	Threatened	-
transverse lady beetle	*Coccinella transversoguttata*	S4	Special Concern	Special Concern
Verna's flower moth	*Schinia verna*	S1	Threatened	Threatened

Notes:

[1] SKCDC 2023a, S1 – critically imperiled, S2 – imperiled, S3 – vulnerable, S4 – apparently secure, S5 – secure, B – breeding population, M – migrant population, N – non-breeding population, U – status is uncertain

Source: GOS 2023

[2] Observed in the greater region (The Cornell Lab of Ornithology 2023b; Birds Canada 2023)

[3] Expected species in 1 km Study Area Buffer identified in HABISask Project Screening Report (Appendix A)

Appendix F Heritage Sensitivity Screening Report

Heritage Sensitivity Screening Report

Sensitivity: This selection is Heritage Sensitive.
This development does not have heritage clearance to proceed. Submit this project to the Heritage Conservation Branch for further review.

Report Generated
May/24/2023 12:21
PM

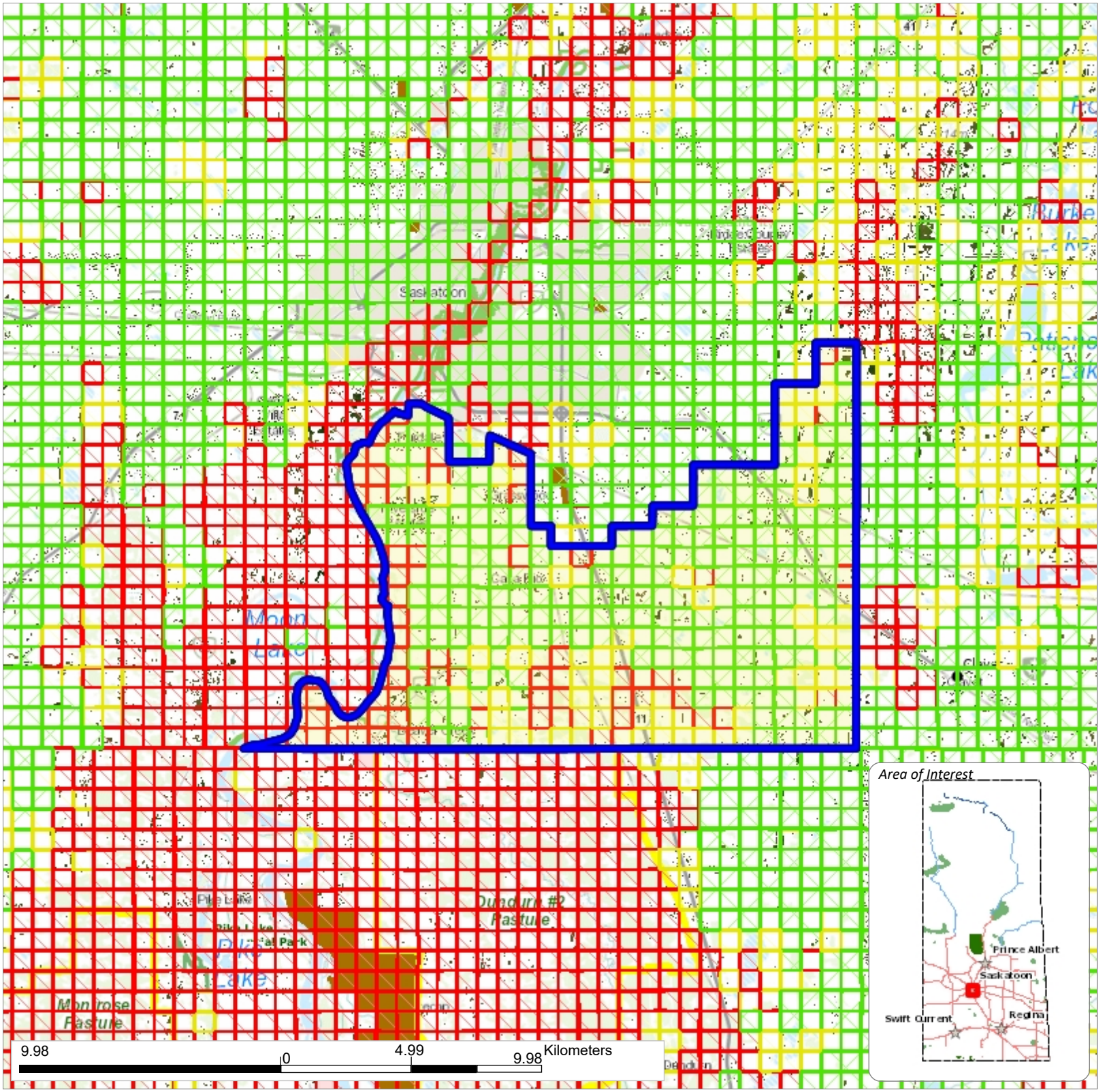

Heritage Sensitivity Screening Report

Parcel Description	Sensitivity	Parcel Description	Sensitivity
SW-03-35-06-3	Y	SE-03-35-06-3	Y
SE-02-35-06-3	Y	SW-12-35-06-3	Y
SE-01-35-06-3	Y	SE-12-35-06-3	Y
SW-06-35-05-3	Y	NW-07-35-05-3	Y
SW-30-35-05-3	Y	NE-36-35-06-3	Y
SE-06-36-05-3	N	NE-06-36-05-3	N
NE-07-36-05-3	N	NW-05-35-05-3	N
SW-29-35-05-3	Y	SW-05-36-05-3	Y
NW-05-36-05-3	C	SW-08-36-05-3	N
SE-05-35-05-3	C	NE-08-35-05-3	N
NW-09-35-05-3	Y	SW-16-35-05-3	N
SW-33-35-05-3	N	SE-09-35-05-3	N
NE-21-35-05-3	N	SE-33-35-05-3	N
NW-15-35-05-3	N	NW-03-36-05-3	N
SE-22-35-05-3	N	NE-22-35-05-3	N
NE-03-36-05-3	C	SW-35-35-05-3	N
NW-01-35-05-3	Y	SE-12-35-05-3	C
NE-25-35-05-3	N	SW-18-35-04-3	N
NW-19-35-04-3	N	SE-30-35-04-3	N
NW-04-35-04-3	Y	NE-32-35-04-3	N
NW-33-34-04-3	Y	SW-04-36-04-3	N
NE-33-34-04-3	N	SW-27-35-04-3	N
NE-33-35-04-3	N	NE-04-36-04-3	N
SE-10-35-04-3	N	NE-34-35-04-3	N
SW-26-35-04-3	N	NW-02-36-04-3	N
NE-23-35-04-3	C	NE-11-36-04-3	C
SE-14-36-04-3	C	NW-14-36-04-3	C
NW-01-36-04-3	N	SE-24-35-04-3	C
NE-36-35-04-3	N	NE-24-36-04-3	C
NE-34-34-06-3	Y	NW-02-35-06-3	Y
NE-19-35-05-3	Y	SE-31-35-05-3	N
SW-07-36-05-3	Y	NW-07-36-05-3	Y
SW-04-35-05-3	N	SW-21-35-05-3	N
NW-34-34-05-3	Y	SW-22-35-05-3	N
SW-27-35-05-3	N	SE-03-35-05-3	C
NE-03-35-05-3	C	SW-14-35-05-3	C
SW-11-36-05-3	C	NE-14-35-05-3	N
SE-23-35-05-3	N	SW-36-35-05-3	C
NE-13-35-05-3	N	NW-31-34-04-3	Y
NW-07-35-04-3	Y	NE-18-35-04-3	N
NE-30-35-04-3	N	NW-29-35-04-3	N
NE-08-35-04-3	N	SE-17-35-04-3	N
NE-29-35-04-3	N	NE-05-36-04-3	N
SE-09-35-04-3	N	SE-21-35-04-3	N
NW-04-36-04-3	N	NW-10-35-04-3	N

Parcel Description	Sensitivity	Parcel Description	Sensitivity
NW-15-35-04-3	N	SE-28-35-04-3	N
SE-33-35-04-3	N	SE-04-36-04-3	N
NE-27-35-04-3	N	NW-03-36-04-3	N
NE-34-34-04-3	N	NW-02-35-04-3	N
SW-35-35-04-3	C	NE-15-36-04-3	N
SE-14-35-04-3	N	SE-35-35-04-3	N
NW-36-34-04-3	N	SW-24-35-04-3	N
SW-01-36-04-3	N	SW-12-36-04-3	N
SE-12-35-04-3	N	NE-12-35-04-3	C
NE-25-35-04-3	N	SE-36-35-04-3	N
SE-12-36-04-3	N	NE-13-36-04-3	N
NE-02-35-06-3	Y	SW-07-35-05-3	Y
SW-19-35-05-3	Y	SW-31-35-05-3	N
SE-01-36-06-3	Y	NW-06-36-05-3	Y
SE-07-36-05-3	N	SW-18-36-05-3	Y
SW-20-35-05-3	N	SW-32-35-05-3	N
SE-20-35-05-3	N	NE-20-35-05-3	N
SE-08-36-05-3	Y	SW-04-36-05-3	N
SE-04-35-05-3	N	NE-33-35-05-3	N
SW-03-36-05-3	C	NE-10-35-05-3	N
NW-35-34-05-3	Y	SW-02-35-05-3	C
NW-11-35-05-3	Y	NW-14-35-05-3	N
SW-23-35-05-3	N	NW-35-35-05-3	N
NE-35-34-05-3	Y	SW-01-35-05-3	C
SW-06-35-04-3	C	SW-05-35-04-3	C
NE-05-35-04-3	Y	SW-16-35-04-3	N
SW-28-35-04-3	Y	SW-33-35-04-3	N
SW-15-35-04-3	N	NE-28-35-04-3	N
SW-34-35-04-3	N	NW-11-35-04-3	C
SW-23-35-04-3	N	NW-26-35-04-3	N
NE-11-35-04-3	C	NE-35-35-04-3	N
NE-02-36-04-3	C	SW-01-35-04-3	N
SW-13-36-04-3	Y	SW-24-36-04-3	C
NE-36-34-04-3	N	NE-24-35-04-3	C
NE-01-36-04-3	N	SW-11-35-06-3	Y
NE-11-35-06-3	Y	NW-36-34-06-3	Y
NE-01-35-06-3	Y	SW-18-35-05-3	Y
SW-06-36-05-3	Y	NE-07-35-05-3	Y
SE-30-35-05-3	Y	NE-30-35-05-3	Y
NW-08-35-05-3	Y	SW-17-36-05-3	Y
NE-32-34-05-3	Y	NE-32-35-05-3	N
SW-09-35-05-3	C	NW-16-35-05-3	N
NW-28-35-05-3	N	NW-33-35-05-3	N
NW-04-36-05-3	N	NW-10-35-05-3	N
NW-27-35-05-3	N	NW-10-36-05-3	C
SE-11-35-05-3	Y	SE-14-35-05-3	Y
NE-26-35-05-3	Y	SW-13-35-05-3	C
SW-25-35-05-3	C	NW-25-35-05-3	Y

Parcel Description	Sensitivity	Parcel Description	Sensitivity
NE-36-34-05-3	Y	SE-24-35-05-3	N
SW-31-35-04-3	N	SE-07-35-04-3	Y
SE-05-35-04-3	C	NW-05-35-04-3	C
SW-08-35-04-3	C	NW-08-35-04-3	Y
SW-04-35-04-3	C	NE-20-35-04-3	N
SE-16-35-04-3	N	NE-16-35-04-3	N
NE-21-35-04-3	N	NW-28-35-04-3	N
SW-10-35-04-3	N	NE-10-35-04-3	N
SE-15-35-04-3	N	SE-22-35-04-3	N
SE-27-35-04-3	N	SW-03-36-04-3	N
SE-03-36-04-3	N	NW-35-34-04-3	N
NE-02-35-04-3	N	SW-12-35-04-3	Y
SW-36-35-04-3	N	NW-13-36-04-3	C
NW-24-36-04-3	Y	SE-13-35-04-3	N
NE-13-35-04-3	C	NW-11-35-06-3	Y
NW-06-35-05-3	Y	NW-19-35-05-3	Y
NW-30-35-05-3	Y	NW-31-35-05-3	N
NW-31-34-05-3	Y	SE-07-35-05-3	Y
SE-18-35-05-3	Y	SE-19-35-05-3	Y
SW-17-35-05-3	N	NW-32-35-05-3	N
NW-08-36-05-3	N	NE-05-35-05-3	N
SE-08-35-05-3	N	NE-05-36-05-3	Y
NW-21-35-05-3	N	NW-09-36-05-3	Y
NE-09-35-05-3	N	NE-16-35-05-3	N
SE-04-36-05-3	N	SW-03-35-05-3	C
SW-15-35-05-3	N	SW-10-36-05-3	C
SE-10-35-05-3	N	NE-15-35-05-3	N
SE-03-36-05-3	Y	SW-26-35-05-3	N
SW-02-36-05-3	N	NE-02-35-05-3	Y
NE-11-35-05-3	Y	NE-23-35-05-3	N
NW-24-35-05-3	N	SE-01-35-05-3	Y
SE-13-35-05-3	C	SE-06-35-04-3	C
NE-06-35-04-3	C	SE-31-35-04-3	N
SE-08-35-04-3	Y	SW-17-35-04-3	N
NW-20-35-04-3	N	SW-29-35-04-3	N
NE-17-35-04-3	N	SE-05-36-04-3	N
NE-09-35-04-3	N	NW-16-35-04-3	N
SW-21-35-04-3	N	NW-22-35-04-3	N
NE-03-36-04-3	N	NE-10-36-04-3	N
NE-35-34-04-3	N	SE-11-35-04-3	C
SE-11-36-04-3	C	NW-11-36-04-3	N
SW-13-35-04-3	N	NW-36-35-04-3	N
NW-12-36-04-3	N	SE-25-35-04-3	Y
SE-11-35-06-3	Y	NE-01-36-06-3	Y
NE-12-36-06-3	Y	NE-31-34-05-3	Y
SW-08-35-05-3	N	NW-20-35-05-3	N
NW-29-35-05-3	Y	SE-17-35-05-3	Y
NE-08-36-05-3	N	SW-28-35-05-3	N

Parcel Description	Sensitivity	Parcel Description	Sensitivity
SE-16-35-05-3	C	NE-04-36-05-3	N
SE-09-36-05-3	N	NE-09-36-05-3	C
SW-34-35-05-3	N	SE-15-35-05-3	C
NW-02-35-05-3	Y	NW-23-35-05-3	N
NW-12-35-05-3	C	NE-01-35-05-3	C
NE-12-35-05-3	C	SE-25-35-05-3	N
NW-30-35-04-3	N	NE-07-35-04-3	Y
SE-18-35-04-3	N	NE-31-35-04-3	N
NW-32-34-04-3	C	SW-20-35-04-3	N
NW-09-35-04-3	N	SE-20-35-04-3	N
SE-29-35-04-3	C	SW-03-35-04-3	C
NW-34-35-04-3	N	SW-02-35-04-3	N
NW-23-35-04-3	N	SW-02-36-04-3	N
SE-26-35-04-3	N	SW-11-36-04-3	N
NW-25-35-04-3	N	SE-01-35-04-3	N
SE-13-36-04-3	N	NW-34-34-06-3	Y
NE-35-34-06-3	Y	NW-01-36-06-3	Y
SW-12-36-06-3	Y	NE-36-34-06-3	Y
SE-12-36-06-3	Y	NE-06-35-05-3	Y
NE-31-35-05-3	N	SW-05-35-05-3	Y
NW-17-35-05-3	N	NE-29-35-05-3	N
SE-32-35-05-3	N	SE-05-36-05-3	C
NW-33-34-05-3	Y	SW-09-36-05-3	N
NE-04-35-05-3	Y	SE-21-35-05-3	N
SW-10-35-05-3	C	NW-34-35-05-3	N
NE-34-34-05-3	Y	SE-34-35-05-3	N
SW-11-35-05-3	Y	NW-02-36-05-3	N
SE-35-35-05-3	C	NW-36-34-05-3	Y
SW-12-35-05-3	C	NW-13-35-05-3	N
NW-06-35-04-3	Y	SW-30-35-04-3	N
NE-19-35-04-3	N	SW-32-35-04-3	N
NW-32-35-04-3	N	SW-09-35-04-3	N
SE-32-35-04-3	N	SE-04-35-04-3	C
NE-04-35-04-3	Y	NW-21-35-04-3	C
NW-33-35-04-3	N	NW-03-35-04-3	C
NE-03-35-04-3	N	NE-15-35-04-3	N
SE-34-35-04-3	N	NW-14-35-04-3	N
SE-02-35-04-3	N	NE-01-35-04-3	N
SE-01-36-04-3	N	NE-12-36-04-3	N
NE-33-34-06-3	Y	SW-02-35-06-3	Y
NW-35-34-06-3	Y	SW-01-35-06-3	Y
NW-01-35-06-3	Y	SE-06-35-05-3	Y
NE-18-35-05-3	Y	NW-32-34-05-3	Y
SE-18-36-05-3	Y	NE-17-35-05-3	N
SE-29-35-05-3	N	SE-17-36-05-3	N
NW-04-35-05-3	N	NE-33-34-05-3	Y
SE-28-35-05-3	N	NE-28-35-05-3	N
NW-03-35-05-3	C	NW-22-35-05-3	N

Parcel Description	Sensitivity	Parcel Description	Sensitivity
SE-27-35-05-3	N	NE-27-35-05-3	Y
NE-34-35-05-3	N	SE-10-36-05-3	Y
NW-26-35-05-3	N	SE-02-35-05-3	C
SE-26-35-05-3	C	SW-24-35-05-3	N
NE-24-35-05-3	N	SW-07-35-04-3	Y
NW-18-35-04-3	C	SW-19-35-04-3	N
NE-31-34-04-3	C	SE-19-35-04-3	N
NW-17-35-04-3	N	NE-32-34-04-3	C
SW-22-35-04-3	N	NW-27-35-04-3	N
NW-34-34-04-3	N	SE-03-35-04-3	N
NE-22-35-04-3	N	SW-11-35-04-3	N
SW-14-35-04-3	N	NW-35-35-04-3	N
SE-10-36-04-3	N	SE-15-36-04-3	N
NE-14-35-04-3	N	SE-23-35-04-3	C
NE-26-35-04-3	N	SE-02-36-04-3	C
SW-14-36-04-3	C	NE-14-36-04-3	C
NW-01-35-04-3	N	NW-12-35-04-3	C
NW-13-35-04-3	C	NW-24-35-04-3	N
SW-25-35-04-3	N	SE-24-36-04-3	N

Sensitivity Legend:

Y = Heritage Sensitive, C = Conditionally Heritage Sensitive, N = Not Heritage Sensitive, Blank = Heritage Sensitive.

When the parcel description and sensitivity listing is blank, the project is outside of the quarter sections screened for sensitivity. All projects within these areas are automatically heritage sensitive and require review.

Disclaimer:

Attention landowners: The majority of small scale activities that involve improvements to, or maintenance of, private property usually have little or no impact on archaeological heritage resources. Access the Exempt Activities Checklist for Private Landowners to determine if your proposed activity is exempt from archaeological heritage screening using the Developers' Online Screening Tool. If the activity is exempt, please retain a copy (paper or electronic) of the completed Exempt Activities Checklist for Private Landowners for your records. Include the completed checklist with any applications for regulatory approvals or permits that may be required for the proposed activity to confirm that heritage concerns have been addressed.

Exempt Activities Checklist: https://applications.saskatchewan.ca/eachecklist

Contact us:

For more information, please contact the Heritage Conservation Branch:

Email: arms@gov.sk.ca

Tel 306-787-2817.

Appendix A.6

Figures for 6.0 Transportation

FIGURE 6.1 - SOUTH R.M. AREA ROAD NETWORK AND CONDITIONS PLAN

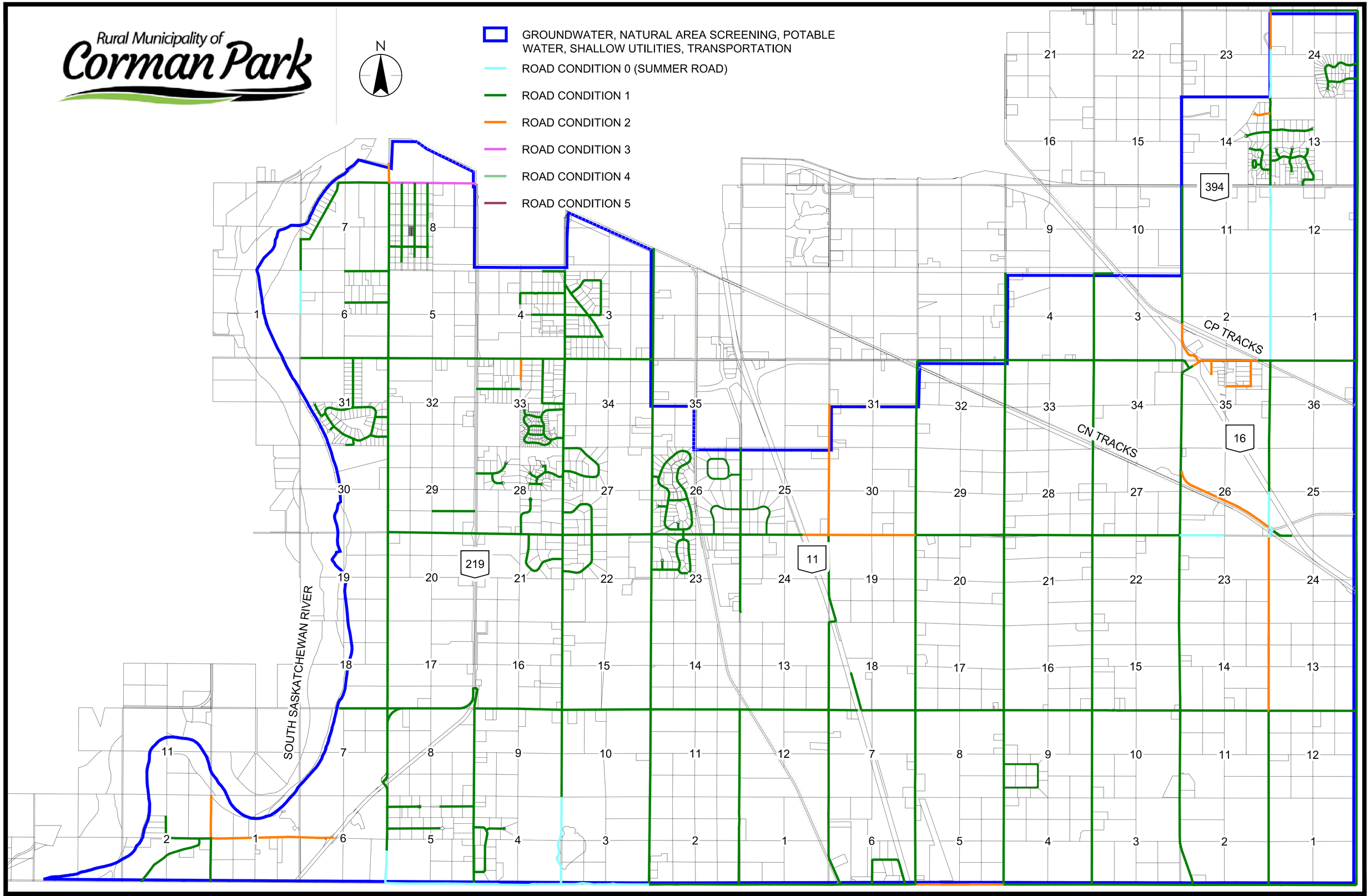

	A	B	C	D	E	F	G	H	I	J	K	L	M
1	**Rural Municipality of Corman Park**												
2	Road Condition Assessment Tool												
3				EXAMPLE:									
4	Reference			1	2	3	4	5	6	7	8	9	10
5	**Road Name:**	(Range Road = RR, Township Road = TWP, etc)		RR3050	RR3040	RR3040	RR3040	RR3040	RR3040	Tuscan Ln	TWP364	RR3041	RR3041
6	From: (Start)	(Crossroad Intersecting)		TWP362	Tamke Rd	Melness Rd	Highway 16	TWP360	Hwy 394	RR3040	RR3040	TWP364	Gravel
7	To: (End)			TWP363	Melness Rd	Highway 16	TWP360	Hwy 394	TWP364	RR3040	RR3041	Summer Rd	Gravel
8													
9	**Surface** Type:	1. Asphalt 2.Seal 3. Gravel, 4. Dirt Trail / Summer Road		1	3	3	3	3	3	1	3	3	4
10													
11	**Surface** Width:	Shoulder-Shoulder, Or edge of Pavement (m)		8	7.5	7.5	6	6	7.5/7	7	8.5	5.5	wheel ruts
12													
13	**Seal/Asphalt** Condition:	Cracking Severity (% of Corridor Affected)	1. Minor	90%						100%			
14			3. Major	5%									
15			5. Extreme	5%									
16			Sum (Must Equal to 100%)	100%	**0%**	**0%**	**0%**	**0%**	**0%**	100%	**0%**	**0%**	**0%**
17		Pothole Frequency	1. None 2. Few ….. 5. Extremely Frequent	2						1			
18													
19	**Surface** Condition:	Rutting Severity (% of Corridor Affected)	1. Minor	90%	100%	100%	100%	100%	100%	100%	100%	100%	
20	(Ride / Profile)		3. Major	5%									
21			5. Extreme	5%									
22			Sum (Must Equal to 100%)	100%	100%	100%	100%	100%	100%	100%	100%	100%	**0%**
23													
24		Smooth	% of Segment Length	2%	100%	100%	100%	100%	100%	100%	100%	100%	
25		Fair	% of Segment Length	5%									
26		Poor	% of Segment Length	1%									
27			Sum (Must Equal to 100%)	**8%**	100%	100%	100%	100%	100%	100%	100%	100%	**0%**
28													
29	**Gravel** Coverage:	Lots of Crushed Stone	% of Segment Length	91%	95%	80%	50%	75%	75%		100%		
30		Moderate	% of Segment Length	1%	5%	20%	50%	25%	25%			100%	
31		Mostly clay, minimal Gravel	% of Segment Length	5%									
32			Sum (Must Equal to 100%)	**97%**	100%	100%	100%	100%	100%	**0%**	100%	100%	**0%**
33													
34	Average **Ditch** Depth:	Flat/Almost Flat	~0 m deep	0%	0%								
35		Shallow	Less than 1.0 m deep	5%	0%		50%	50%					
36		Moderate	Average 1.0 m deep	5%	100%	70%	35%	50%	75%		25%	25%	25%
37		Deep	Greater than 1.0 m deep	90%	0%	30%	15%		25%	100%	75%	75%	75%
38			Sum (Must Equal to 100%)	100%	100%	100%	100%	100%	100%	100%	100%	100%	100%
39													
40	Sideslope	1. 4:1, 2. 3:1, 5. Steeper than 3:1		2	1	2	2	2	2	5	5	2	
41													
42	Standing Water:	1. None 2. Minimal - Shallow Depth 3. Moderate in multiple locations 4. Lots of standing		2	1	1	1	1	1	4	1	3	
43													
44	Failures:	Number of soft spots, local failures, or blowout per section		7	0	0	0	0	0	0	0	0	
45			1-5 rating conversion	5	0	0	0	0	0	0	0	0	0
46													
47	Summary of general condition for **all aspects**:		1. Excellent 2…3…4… 5. Failed	2	2	2	2	2	1	2	2	2	
48													
49	General Comments of **overall** Section:		Any additional pertinent detail	This section of road shows a lot of water but solid.	Very good condition			Shallower ditches for south half. TWP 362 is Hwy 394	7.5 width for south half of segment then 7.0 width for north half of segment	Roadway top constructedtoo wide for sub grade width. 1:1 side slopes for top .5m, then 2:1/3:1 below that.		Gravel road from TWP364 to 1.4K south then becomes impassable summer road	Trail impassable by car.
50													

	A	B	C	N	O	P	Q	R	S	T
1	**Rural Municipality of Corman Park**									
2	Road Condition Assessment Tool									
3										
4	Reference			11	12	13	14	15	16	17
5	**Road Name:**	(Range Road = RR, Township Road = TWP, etc)		RR3041	Hidden Ridge Bend	Hidden Ridge Rd	Hidden Ridge Trail	Applewood Dr	Applewood Rise	Applewood Terrace
6	From: (Start)	(Crossroad Intersecting)		Sumr Road	RR3041	RR3041	RR3041	RR3041	Applewood Dr	Applewood Dr
7	To: (End)			TWP362	Cul-de-sac	Cul-de-sac	Cul-de-sac	Hwy 394	Cul-de-sac	Cul-de-sac
8					To west	To east	To west	To east		
9	**Surface** Type:	1. Asphalt 2.Seal 3. Gravel, 4. Dirt Trail / Summer Road		2	2	2	2	3	3	3
10										
11	**Surface** Width:	Shoulder-Shoulder, Or edge of Pavement (m)		7.5	7.5	7.5	7.5	7	7	7
12										
13	**Seal/Asphalt** Condition:	Cracking Severity (% of Corridor Affected)	1. Minor	100%	90%	90%	90%			
14			3. Major		10%	10%	10%			
15			5. Extreme							
16			Sum (Must Equal to 100%)	100%	100%	100%	100%	**0%**	**0%**	**0%**
17		Pothole Frequency	1. None 2. Few ….. 5. Extremely Frequent	1	2	1	1			
18										
19	**Surface** Condition:	Rutting Severity (% of Corridor Affected)	1. Minor	100%	95%	100%	100%	100%	100%	100%
20	(Ride / Profile)		3. Major		5%					
21			5. Extreme							
22			Sum (Must Equal to 100%)	100%	100%	100%	100%	100%	100%	100%
23										
24		Smooth	% of Segment Length	95%	95%	95%	95%	80%	95%	95%
25		Fair	% of Segment Length	5%	5%	5%	5%	20%	5%	5%
26		Poor	% of Segment Length							
27			Sum (Must Equal to 100%)	100%	100%	100%	100%	100%	100%	100%
28										
29	**Gravel** Coverage:	Lots of Crushed Stone	% of Segment Length					25%	25%	25%
30		Moderate	% of Segment Length					75%	75%	75%
31		Mostly clay, minimal Gravel	% of Segment Length							
32			Sum (Must Equal to 100%)	**0%**	**0%**	**0%**	**0%**	100%	100%	100%
33										
34	Average **Ditch** Depth:	Flat/Almost Flat	~0 m deep							
35		Shallow	Less than 1.0 m deep							
36		Moderate	Average 1.0 m deep							
37		Deep	Greater than 1.0 m deep	100%	100%	100%	100%	100%	100%	100%
38			Sum (Must Equal to 100%)	100%	100%	100%	100%	100%	100%	100%
39										
40	Sideslope	1. 4:1, 2. 3:1, 5. Steeper than 3:1		2	3	3	2	1	1	1
41										
42	Standing Water:	1. None 2. Minimal - Shallow Depth 3. Moderate in multiple locations 4. Lots of standing		1	2	1	2	2	1	1
43										
44	Failures:	Number of soft spots, local failures, or blowout per section			1	1	1	0	0	0
45			1-5 rating conversion	0	1	1	1	0	0	0
46										
47	Summary of general condition for **all aspects**:		1. Excellent 2…3…4… 5. Failed	2	2	2	2	2	2	2
48										
49	General Comments of **overall** Section:		Any additional pertinent detail	Seal surface changes to asphalt 100m south of Hidden Ridge Trail. Seal 7.5m. Asphalt 8m. Asphalt segment about 300m long.	Seal is good except cul-de-sac bulb where trucks turn around. Seal is destroyed	Seal is good except cul-de-sac bulb where seal changed to gravel	Seal is good except cul-de-sac bulb where seal changed to gravel			
50										

	A	B	C	U	V	W	X	Y	Z	AA	AB	AC
1	**Rural Municipality of Corman Park**											
2	Road Condition Assessment Tool											
3												
4	Reference			18	19	20	21	22	23	24	25	26
5	**Road Name:**	(Range Road = RR, Township Road = TWP, etc)		Applewood Ct	Meadow Ridge Dr	RR3041	TWP360	TWP360	TWP360	Freeborn Rd	Freeborn Rd	RR3041
6	From: (Start)	(Crossroad Intersecting)		Applewood Dr	RR3041	Hwy 394	RR3041	RR3041	CP Rail	TWP360	CP Rail	TWP360
7	To: (End)			Cul-de-sac	Cul-de-sac	TWP360	RR3040	CP Rail	Hwy 16	CP Rail	Hwy 394	Hwy 16
8					To west							
9	**Surface** Type:	1. Asphalt 2.Seal 3. Gravel, 4. Dirt Trail / Summer Road		3	1	4	3	3	1	3	3	3
10												
11	**Surface** Width:	Shoulder-Shoulder, Or edge of Pavement (m)		7	7.5	3	8.5	8	8	8	8	6.5
12												
13	**Seal/Asphalt** Condition:	Cracking Severity (% of Corridor Affected)	1. Minor		100%				100%			
14			3. Major									
15			5. Extreme									
16			Sum (Must Equal to 100%)	**0%**	100%	**0%**	**0%**	**0%**	100%	**0%**	**0%**	**0%**
17		Pothole Frequency	1. None 2. Few ….. 5. Extremely Frequent		1				2	3		
18												
19	**Surface** Condition:	Rutting Severity (% of Corridor Affected)	1. Minor	100%	100%		100%	100%	95%	95%	100%	100%
20	(Ride / Profile)		3. Major						5%	5%		
21			5. Extreme									
22			Sum (Must Equal to 100%)	100%	100%	**0%**	100%	100%	100%	100%	100%	100%
23												
24		Smooth	% of Segment Length	95%	95%		95%	95%	80%	80%	95%	95%
25		Fair	% of Segment Length	5%	5%		5%	5%	20%	10%	5%	5%
26		Poor	% of Segment Length							10%		
27			Sum (Must Equal to 100%)	100%	100%	**0%**	100%	100%	100%	100%	100%	100%
28												
29	**Gravel** Coverage:	Lots of Crushed Stone	% of Segment Length	25%			75%	100%		75%	100%	75%
30		Moderate	% of Segment Length	75%			25%			25%		25%
31		Mostly clay, minimal Gravel	% of Segment Length									
32			Sum (Must Equal to 100%)	100%	**0%**	**0%**	100%	100%	**0%**	100%	100%	100%
33												
34	Average **Ditch** Depth:	Flat/Almost Flat	~0 m deep									10%
35		Shallow	Less than 1.0 m deep									10%
36		Moderate	Average 1.0 m deep									10%
37		Deep	Greater than 1.0 m deep	100%	100%		100%	100%	100%	100%	100%	70%
38			Sum (Must Equal to 100%)	100%	100%	**0%**	100%	100%	100%	100%	100%	100%
39												
40	Sideslope	1. 4:1, 2. 3:1, 5. Steeper than 3:1		1	2		2	5	2	2	2	3
41												
42	Standing Water:	1. None 2. Minimal - Shallow Depth 3. Moderate in multiple locations 4. Lots of standing		1	2		1	1	1	1	1	2
43												
44	Failures:	Number of soft spots, local failures, or blowout per section		1	1		0	0	5	3	0	0
45			1-5 rating conversion	1	1		0	0	5	3	0	0
46												
47	Summary of general condition for **all aspects**:		1. Excellent 2…3…4… 5. Failed	2	1		1	2	2	3	1	2
48												
49	General Comments of **overall** Section:		Any additional pertinent detail	Grass growing in middle of granular cul-de-sac bulb.	Asphalt dead ends near fence line turnaround with mail boxes is clay/gravel. Culvert installed so looks like future expansion there.			Rail crossing offset approximately 1.5m south	Asphalt width is 8m but shoulder width is 10.5m. Lots of surface cracking but no failed areas.	Two short sections of asphalt remaining on the N-S segment are in fair condition with some potholes off the ends		Dead ends at North right of way for WB Hwy 16. Ditches become shallow at south end. Road quality decreases near south end.
50												

	A	B	C	AD	AE	AF	AG
1	**Rural Municipality of Corman Park**						
2	Road Condition Assessment Tool						
3							
4	Reference			27	28	29	30
5	**Road Name:**	(Range Road = RR, Township Road = TWP, etc)		Melness Rd	RR3041	TWP 354	TWP 354
6	From: (Start)	(Crossroad Intersecting)		RR3040	Melness Rd	RR3041	RR3041
7	To: (End)			RR3041	TWP 354	350m East	RR3042
8							
9	**Surface** Type:	1. Asphalt 2.Seal 3. Gravel, 4. Dirt Trail / Summer Road		3	3	3	2
10							
11	**Surface** Width:	Shoulder-Shoulder, Or edge of Pavement (m)		8.5	8	6	7
12							
13	**Seal/Asphalt** Condition:	Cracking Severity (% of Corridor Affected)	1. Minor				80%
14			3. Major				20%
15			5. Extreme				
16			Sum (Must Equal to 100%)	**0%**	**0%**	**0%**	100%
17		Pothole Frequency	1. None 2. Few ….. 5. Extremely Frequent				2
18							
19	**Surface** Condition:	Rutting Severity (% of Corridor Affected)	1. Minor	100%	100%	100%	100%
20	(Ride / Profile)		3. Major				
21			5. Extreme				
22			Sum (Must Equal to 100%)	100%	100%	100%	100%
23							
24		Smooth	% of Segment Length	100%	100%	100%	70%
25		Fair	% of Segment Length				25%
26		Poor	% of Segment Length				5%
27			Sum (Must Equal to 100%)	100%	100%	100%	100%
28							
29	**Gravel** Coverage:	Lots of Crushed Stone	% of Segment Length	100%			
30		Moderate	% of Segment Length		100%	100%	
31		Mostly clay, minimal Gravel	% of Segment Length				
32			Sum (Must Equal to 100%)	100%	100%	100%	**0%**
33							
34	Average **Ditch** Depth:	Flat/Almost Flat	~0 m deep				
35		Shallow	Less than 1.0 m deep				
36		Moderate	Average 1.0 m deep				
37		Deep	Greater than 1.0 m deep	100%	100%	100%	100%
38			Sum (Must Equal to 100%)	100%	100%	100%	100%
39							
40	Sideslope	1. 4:1, 2. 3:1, 5. Steeper than 3:1		2	2	2	2
41							
42	Standing Water:	1. None 2. Minimal - Shallow Depth 3. Moderate in multiple locations 4. Lots of standing		1	2	1	1
43							
44	Failures:	Number of soft spots, local failures, or blowout per section		0	0	0	2
45			1-5 rating conversion	0	0	0	2
46							
47	Summary of general condition for **all aspects**:		1. Excellent 2…3…4… 5. Failed	1	2	2	2
48							
49	General Comments of **overall** Section:		Any additional pertinent detail		Good road from Melness Rd to 900m south of TWP354 where there is a barricade and concrete barrier for road closed signs. The 900m stretch has the same gravel road crossection as the rest but has been overgrown with grass remnants of a large slough on both sides. was this closed during the wet years ten years ago?	The first 50m has chip seal surface in fair condition. The remaining 300m going east to dead end has been changed back to gravel surface.	RR Tracks at east end are settled and seal surface is depressed/slightly broken up. Some asphalt patching has been done along the rest of the section and some sections of surface are deteriorating.
50							

	A	B	C	AH	AI	AJ	AK	AL	AM	AN	AO	AP	AQ
1	**Rural Municipality of Corman Park**												
2	Road Condition Assessment Tool												
3													
4	Reference			31	32	33	34	35	36	37	38	39	40
5	**Road Name:**	(Range Road = RR, Township Road = TWP, etc)		RR3041	RR3042	Baker Rd	RR3042	Melness Rd	RR3041	Tamke Rd	Tamke Rd	RR3042	Tamke Rd
6	From: (Start)	(Crossroad Intersecting)		TWP 354	TWP 354A	RR3041	Baker Rd	RR3041	Melness Rd	RR3040	RR3041	Tamke Rd	RR3042
7	To: (End)			Hwy 16	Baker Rd	RR3042	Melness Rd	RR3042	Tamke Rd	RR3041	RR3042	Melness Rd	RR3043
8													
9	**Surface** Type:	1. Asphalt 2.Seal 3. Gravel, 4. Dirt Trail / Summer Road		4	1	4	1	3	3	3	3	1	3
10													
11	**Surface** Width:	Shoulder-Shoulder, Or edge of Pavement (m)			7		7	9	7	8	8	7.5	8
12													
13	**Seal/Asphalt** Condition:	Cracking Severity (% of Corridor Affected)	1. Minor		100%		100%					100%	
14			3. Major										
15			5. Extreme										
16			Sum (Must Equal to 100%)	**0%**	100%	**0%**	100%	**0%**	**0%**	**0%**	**0%**	100%	**0%**
17		Pothole Frequency	1. None 2. Few ….. 5. Extremely Frequent		1		1					1	
18													
19	**Surface** Condition:	Rutting Severity (% of Corridor Affected)	1. Minor		100%		100%	95%	100%	100%	100%	100%	100%
20	(Ride / Profile)		3. Major					5%					
21			5. Extreme										
22			Sum (Must Equal to 100%)	**0%**	100%	**0%**	100%	100%	100%	100%	100%	100%	100%
23													
24		Smooth	% of Segment Length					90%	100%	100%	100%		95%
25		Fair	% of Segment Length		100%		100%	10%				100%	5%
26		Poor	% of Segment Length										
27			Sum (Must Equal to 100%)	**0%**	100%	**0%**	100%	100%	100%	100%	100%	100%	100%
28													
29	**Gravel** Coverage:	Lots of Crushed Stone	% of Segment Length					100%		100%	100%		70%
30		Moderate	% of Segment Length						100%				30%
31		Mostly clay, minimal Gravel	% of Segment Length										
32			Sum (Must Equal to 100%)	**0%**	**0%**	**0%**	**0%**	100%	100%	100%	100%	**0%**	100%
33													
34	Average **Ditch** Depth:	Flat/Almost Flat	~0 m deep						10%				
35		Shallow	Less than 1.0 m deep						15%				
36		Moderate	Average 1.0 m deep						30%				
37		Deep	Greater than 1.0 m deep		100%		100%	100%	45%	100%	100%	100%	100%
38			Sum (Must Equal to 100%)	**0%**	100%	**0%**	100%	100%	100%	100%	100%	100%	100%
39													
40	Sideslope	1. 4:1, 2. 3:1, 5. Steeper than 3:1			2		2	2	2	2	2	2	2
41													
42	Standing Water:	1. None 2. Minimal - Shallow Depth 3. Moderate in multiple locations 4. Lots of standing			1		1	1	2	1	1	1	1
43													
44	Failures:	Number of soft spots, local failures, or blowout per section			1		1	5	0	0	0	0	0
45			1-5 rating conversion	0	1	0	1	5	0	0	0	0	0
46													
47	Summary of general condition for **all aspects**:		1. Excellent 2…3…4… 5. Failed		2		2	1	1	1	1	1	2
48													
49	General Comments of **overall** Section:		Any additional pertinent detail		RR crossing is rough. Ride on full length is good, not great.		Ride on asphalt is fair	Five soft spots in the segment				Ride on asphalt is fair	
50													

	A	B	C	AR	AS	AT	AU	AV	AW	AX	AY	AZ	BA
1	**Rural Municipality of Corman Park**												
2	Road Condition Assessment Tool												
3													
4	Reference			41	42	43	44	45	46	47	48	49	50
5	**Road Name:**	(Range Road = RR, Township Road = TWP, etc)		RR3043	Melness Rd	RR3043	Baker Rd	RR3043	Floral Rd	RR3042	RR3043	Floral Rd	RR3044
6	From: (Start)	(Crossroad Intersecting)		Tamke Rd	RR3042	Melness Rd	RR3042	Baker Rd	RR3042	TWP 354A	Floral Rd	RR3043	Baker Rd
7	To: (End)			Melness Rd	RR3043	Baker Rd	RR3043	Floral Rd	RR3043	Floral Rd	Hwy 16 Access	RR3044	Floral Rd
8													
9	**Surface** Type:	1. Asphalt 2.Seal 3. Gravel, 4. Dirt Trail / Summer Road		3	3	3	3	3	3	1	3	3	3
10													
11	**Surface** Width:	Shoulder-Shoulder, Or edge of Pavement (m)		7.5	8.5	7.5	8.5	7.5	9	7	7.5	9	7.5
12													
13	**Seal/Asphalt** Condition:	Cracking Severity (% of Corridor Affected)	1. Minor							100%			
14			3. Major										
15			5. Extreme										
16			Sum (Must Equal to 100%)	**0%**	**0%**	**0%**	**0%**	**0%**	**0%**	100%	**0%**	**0%**	**0%**
17		Pothole Frequency	1. None 2. Few ….. 5. Extremely Frequent							1			
18													
19	**Surface** Condition:	Rutting Severity (% of Corridor Affected)	1. Minor	100%	100%	100%	100%	100%	100%	100%	100%	100%	100%
20	(Ride / Profile)		3. Major										
21			5. Extreme										
22			Sum (Must Equal to 100%)	100%	100%	100%	100%	100%	100%	100%	100%	100%	100%
23													
24		Smooth	% of Segment Length	100%	100%	100%	100%	100%	100%		100%	90%	100%
25		Fair	% of Segment Length							100%		10%	
26		Poor	% of Segment Length										
27			Sum (Must Equal to 100%)	100%	100%	100%	100%	100%	100%	100%	100%	100%	100%
28													
29	**Gravel** Coverage:	Lots of Crushed Stone	% of Segment Length	100%	100%	100%	100%	100%	100%		100%	100%	100%
30		Moderate	% of Segment Length										
31		Mostly clay, minimal Gravel	% of Segment Length										
32			Sum (Must Equal to 100%)	100%	100%	100%	100%	100%	100%	**0%**	100%	100%	100%
33													
34	Average **Ditch** Depth:	Flat/Almost Flat	~0 m deep										
35		Shallow	Less than 1.0 m deep								10%		
36		Moderate	Average 1.0 m deep										
37		Deep	Greater than 1.0 m deep	100%	100%	100%	100%	100%	100%	100%	90%	100%	100%
38			Sum (Must Equal to 100%)	100%	100%	100%	100%	100%	100%	100%	100%	100%	100%
39													
40	Sideslope	1. 4:1, 2. 3:1, 5. Steeper than 3:1		2	2	2	2	2	1	2	2	2	2
41													
42	Standing Water:	1. None 2. Minimal - Shallow Depth 3. Moderate in multiple locations 4. Lots of standing		1	1	1	1	1	1	1	1	1	1
43													
44	Failures:	Number of soft spots, local failures, or blowout per section		0	0	0	0	0	0	1	0	0	0
45			1-5 rating conversion	0	0	0	0	0	0	1	0	0	0
46													
47	Summary of general condition for **all aspects**:		1. Excellent 2…3…4… 5. Failed	1	1	1	1	1	1	2	1	1	1
48													
49	General Comments of **overall** Section:		Any additional pertinent detail					RR crossing rough		Ride on asphalt is fair	1.6km to dead end. Short stretch of road to the east for highway access		
50													

	A	B	C	BB	BC	BD	BE	BF	BG	BH	BI	BJ	BK
1	**Rural Municipality of Corman Park**												
2	Road Condition Assessment Tool												
3													
4	Reference			51	52	53	54	55	56	57	58	59	60
5	**Road Name:**	(Range Road = RR, Township Road = TWP, etc)		Baker Rd	RR3044	Melness Rd	RR3044	Cory Cres	Tamke Rd	RR3044	Floral Rd	Baker Rd	RR3045
6	From: (Start)	(Crossroad Intersecting)		RR3043	Melness Rd	RR3043	Tamke Rd	RR3044	RR3043	Floral Rd	RR3044	RR3044	Baker Rd
7	To: (End)			RR3044	Baker Rd	RR3044	Melness Rd	RR3044	RR3044	Melville St	RR3045	RR3045	Floral Rd
8													
9	**Surface** Type:	1. Asphalt 2.Seal 3. Gravel, 4. Dirt Trail / Summer Road		3	3	3	2	2	3	3	3	3	3
10													
11	**Surface** Width:	Shoulder-Shoulder, Or edge of Pavement (m)		8	7.5	9	7.5	6.5	8.5	8.5	9	8.5	7.5
12													
13	**Seal/Asphalt** Condition:	Cracking Severity (% of Corridor Affected)	1. Minor					100%					
14			3. Major										
15			5. Extreme										
16			Sum (Must Equal to 100%)	**0%**	**0%**	**0%**	**0%**	100%	**0%**	**0%**	**0%**	**0%**	**0%**
17		Pothole Frequency	1. None 2. Few ….. 5. Extremely Frequent				1	1					
18													
19	**Surface** Condition:	Rutting Severity (% of Corridor Affected)	1. Minor	100%	100%	100%	100%	100%	100%	100%	100%	100%	100%
20	(Ride / Profile)		3. Major										
21			5. Extreme										
22			Sum (Must Equal to 100%)	100%	100%	100%	100%	100%	100%	100%	100%	100%	100%
23													
24		Smooth	% of Segment Length	100%	100%	50%	100%	100%	100%	100%	90%	100%	100%
25		Fair	% of Segment Length			50%					10%		
26		Poor	% of Segment Length										
27			Sum (Must Equal to 100%)	100%	100%	100%	100%	100%	100%	100%	100%	100%	100%
28													
29	**Gravel** Coverage:	Lots of Crushed Stone	% of Segment Length	100%	100%	100%	100%		100%	100%	20%		85%
30		Moderate	% of Segment Length								80%	100%	15%
31		Mostly clay, minimal Gravel	% of Segment Length										
32			Sum (Must Equal to 100%)	100%	100%	100%	100%	**0%**	100%	100%	100%	100%	100%
33													
34	Average **Ditch** Depth:	Flat/Almost Flat	~0 m deep										5%
35		Shallow	Less than 1.0 m deep				2%						15%
36		Moderate	Average 1.0 m deep				8%	20%					
37		Deep	Greater than 1.0 m deep	100%	100%	100%	90%	80%	100%	100%	100%	100%	80%
38			Sum (Must Equal to 100%)	100%	100%	100%	100%	100%	100%	100%	100%	100%	100%
39													
40	Sideslope	1. 4:1, 2. 3:1, 5. Steeper than 3:1		2	2	2	2	2	2	2	2	2	3
41													
42	Standing Water:	1. None 2. Minimal - Shallow Depth 3. Moderate in multiple locations 4. Lots of standing		1	1	1	1	1	1	1	1	1	1
43													
44	Failures:	Number of soft spots, local failures, or blowout per section		0	0	0	0	0	0	0	0	0	0
45			1-5 rating conversion	0	0	0	0	0	0	0	0	0	0
46													
47	Summary of general condition for **all aspects**:		1. Excellent 2…3…4… 5. Failed	1	1	2	1	2	2	1	1	1	2
48													
49	General Comments of **overall** Section:		Any additional pertinent detail			Lengthy washboard surface							
50													

	A	B	C	BL	BM	BN	BO	BP	BQ	BR	BS	BT	BU
1	**Rural Municipality of Corman Park**												
2	Road Condition Assessment Tool												
3													
4	Reference			61	62	63	64	65	66	67	68	69	70
5	**Road Name:**	(Range Road = RR, Township Road = TWP, etc)		RR3045	Melness Rd	RR3045	Tamke Rd	Melness Rd	Swityk Ln	RR3050	Baker Rd	Baker Rd	RR3050
6	From: (Start)	(Crossroad Intersecting)		Melness Rd	RR3044	Tamke Rd	RR3044	RR3045	Melness Rd	Hwy 11	RR3050	RR3045	Baker Rd
7	To: (End)			Baker Rd	RR3045	Melness Rd	RR3045	Hwy 11	Clement Fm	Baker Rd	Hwy 11	RR3050	TWP 355
8													
9	**Surface** Type:	1. Asphalt 2.Seal 3. Gravel, 4. Dirt Trail / Summer Road		3	1	3	3	1	3	3	3	3	3
10													
11	**Surface** Width:	Shoulder-Shoulder, Or edge of Pavement (m)		7.5	8	7	9	8.5	6.5	7	9	9	7
12													
13	**Seal/Asphalt** Condition:	Cracking Severity (% of Corridor Affected)	1. Minor		100%			100%					
14			3. Major										
15			5. Extreme										
16			Sum (Must Equal to 100%)	**0%**	100%	**0%**	**0%**	100%	**0%**	**0%**	**0%**	**0%**	**0%**
17		Pothole Frequency	1. None 2. Few ….. 5. Extremely Frequent		1			1					
18													
19	**Surface** Condition:	Rutting Severity (% of Corridor Affected)	1. Minor	100%	100%	100%	100%	100%	100%	100%	100%	100%	100%
20	(Ride / Profile)		3. Major										
21			5. Extreme										
22			Sum (Must Equal to 100%)	100%	100%	100%	100%	100%	100%	100%	100%	100%	100%
23													
24		Smooth	% of Segment Length	100%		100%			100%	100%			
25		Fair	% of Segment Length		100%		100%	100%			100%	100%	
26		Poor	% of Segment Length										100%
27			Sum (Must Equal to 100%)	100%	100%	100%	100%	100%	**0%**	100%	100%	100%	100%
28													
29	**Gravel** Coverage:	Lots of Crushed Stone	% of Segment Length	90%		50%				100%			
30		Moderate	% of Segment Length	10%		50%	100%		100%		100%	100%	100%
31		Mostly clay, minimal Gravel	% of Segment Length										
32			Sum (Must Equal to 100%)	100%	**0%**	100%	100%	**0%**	100%	100%	100%	100%	100%
33													
34	Average **Ditch** Depth:	Flat/Almost Flat	~0 m deep										
35		Shallow	Less than 1.0 m deep										
36		Moderate	Average 1.0 m deep						100%				
37		Deep	Greater than 1.0 m deep	100%	100%	100%	100%	100%		100%	100%	100%	100%
38			Sum (Must Equal to 100%)	100%	100%	100%	100%	100%	100%	100%	100%	100%	100%
39													
40	Sideslope	1. 4:1, 2. 3:1, 5. Steeper than 3:1		2	2	2	2	2	2	3	2	2	2
41													
42	Standing Water:	1. None 2. Minimal - Shallow Depth 3. Moderate in multiple locations 4. Lots of standing		1	1	1	1	1	1	1	1	1	1
43													
44	Failures:	Number of soft spots, local failures, or blowout per section		0	0	1	0	0	0	0	0	0	0
45			1-5 rating conversion	0	0	1	0	0	0	0	0	0	0
46													
47	Summary of general condition for **all aspects**:		1. Excellent 2…3…4… 5. Failed	2	2	2	2	2	1	1	1	1	1
48													
49	General Comments of **overall** Section:		Any additional pertinent detail						Hwy 11 service road north of Melness Road				
50													

	A	B	C	BV	BW	BX	BY	BZ	CA	CB	CC	CD	CE
1	**Rural Municipality of Corman Park**												
2	Road Condition Assessment Tool												
3													
4	Reference			71	72	73	74	75	76	77	78	79	80
5	**Road Name:**	(Range Road = RR, Township Road = TWP, etc)		Baker Rd	Baker Rd	Baker Rd	Baker Rd	Baker Rd	Rolling Hills Ln	CasaRio Bay	CasaRio Dr	CasaRio Ln	Madalay Dr
6	From: (Start)	(Crossroad Intersecting)		Hwy 11	RR3051	RR3052	RR3053	Hwy 219	Baker Rd	Baker Rd	RR3053	Baker Rd	Baker Rd
7	To: (End)			RR3051	RR3052	RR3053	Hwy 219	RR3055	Cul-de-sac	RR3053	Baker Rd	RR3053	Baker Rd
8													
9	**Surface** Type:	1. Asphalt 2.Seal 3. Gravel, 4. Dirt Trail / Summer Road		1	1	1	1	3	2	2	2	2	2
10													
11	**Surface** Width:	Shoulder-Shoulder, Or edge of Pavement (m)		8.5	8	8	8	9	6	6	6	6.5	7
12													
13	**Seal/Asphalt** Condition:	Cracking Severity (% of Corridor Affected)	1. Minor	100%	100%	100%	100%		100%	100%	100%	100%	100%
14			3. Major										
15			5. Extreme										
16			Sum (Must Equal to 100%)	100%	100%	100%	100%	**0%**	100%	100%	100%	100%	100%
17		Pothole Frequency	1. None 2. Few ….. 5. Extremely Frequent	1	1	1	1		1	1	1	1	1
18													
19	**Surface** Condition:	Rutting Severity (% of Corridor Affected)	1. Minor	100%	100%	100%	100%	100%	100%	100%	100%	100%	100%
20	(Ride / Profile)		3. Major										
21			5. Extreme										
22			Sum (Must Equal to 100%)	100%	100%	100%	100%	100%	100%	100%	100%	100%	100%
23													
24		Smooth	% of Segment Length	100%	100%	100%	100%		100%				100%
25		Fair	% of Segment Length							100%	100%	100%	
26		Poor	% of Segment Length										
27			Sum (Must Equal to 100%)	100%	100%	100%	100%	**0%**	100%	100%	100%	100%	100%
28													
29	**Gravel** Coverage:	Lots of Crushed Stone	% of Segment Length										
30		Moderate	% of Segment Length						100%				
31		Mostly clay, minimal Gravel	% of Segment Length										
32			Sum (Must Equal to 100%)	**0%**	**0%**	**0%**	**0%**	**0%**	100%	**0%**	**0%**	**0%**	**0%**
33													
34	Average **Ditch** Depth:	Flat/Almost Flat	~0 m deep						30%				
35		Shallow	Less than 1.0 m deep					20%	20%				
36		Moderate	Average 1.0 m deep						50%				
37		Deep	Greater than 1.0 m deep	100%	100%	100%	100%	80%		100%	100%	100%	100%
38			Sum (Must Equal to 100%)	100%	100%	100%	100%	100%	100%	100%	100%	100%	100%
39													
40	Sideslope	1. 4:1, 2. 3:1, 5. Steeper than 3:1		2	2	2	2	3	2	2	2	2	2
41													
42	Standing Water:	1. None 2. Minimal - Shallow Depth 3. Moderate in multiple locations 4. Lots of standing		1	1	1	1	1	1	1	1	1	1
43													
44	Failures:	Number of soft spots, local failures, or blowout per section		0	0	0	0	1	0	0	1	0	0
45			1-5 rating conversion	0	0	0	0	1	0	0	1	0	0
46													
47	Summary of general condition for **all aspects**:		1. Excellent 2…3…4… 5. Failed	1	1	1	1	1	2	1	2	2	1
48													
49	General Comments of **overall** Section:		Any additional pertinent detail					Where Baker Road meets RR3055 is a dead end(Cranberry Flats)			3m by 2m failure on east leg. Was previously repaired.		
50													

	A	B	C	CF	CG	CH	CI	CJ	CK	CL	CM	CN
1	**Rural Municipality of Corman Park**											
2	Road Condition Assessment Tool											
3												
4	Reference			81	82	83	84	85	86	87	88	89
5	**Road Name:**	(Range Road = RR, Township Road = TWP, etc)		Madalay Rd	Madalay Bay	Grandview South	Grandview Trail	Grandview Trail	Grandview Lane	Grandview West	Grandview Ct	Grandview Cove
6	From: (Start)	(Crossroad Intersecting)		Madalay Dr	Madalay Rd	Baker Rd	Grandview South	Grandview West	Grandview Trail	Grandview Trail	Grandview Trail	Grandview Trail
7	To: (End)			RR3052	Cul-de-sac	Grandview Trail	Grandview West	Grandview South	Grandview Trail	RR3052	Cul-de-sac	Cul-de-sac
8												
9	**Surface** Type:	1. Asphalt 2.Seal 3. Gravel, 4. Dirt Trail / Summer Road		2	2	1	1	1	1	1	1	1
10												
11	**Surface** Width:	Shoulder-Shoulder, Or edge of Pavement (m)		7	7	7	7	7	7	7.5	7.5	7.5
12												
13	**Seal/Asphalt** Condition:	Cracking Severity (% of Corridor Affected)	1. Minor	100%	100%	100%	100%	100%	100%	100%	100%	100%
14			3. Major									
15			5. Extreme									
16			Sum (Must Equal to 100%)	100%	100%	100%	100%	100%	100%	100%	100%	100%
17		Pothole Frequency	1. None 2. Few ….. 5. Extremely Frequent	1	2	1	1	1	1	1	1	1
18												
19	**Surface** Condition:	Rutting Severity (% of Corridor Affected)	1. Minor	100%	100%	100%	100%	100%	100%	100%	100%	100%
20	(Ride / Profile)		3. Major									
21			5. Extreme									
22			Sum (Must Equal to 100%)	100%	100%	100%	100%	100%	100%	100%	100%	100%
23												
24		Smooth	% of Segment Length	100%	80%	100%	100%	100%	100%	100%	100%	100%
25		Fair	% of Segment Length		20%							
26		Poor	% of Segment Length									
27			Sum (Must Equal to 100%)	100%	100%	100%	100%	100%	100%	100%	100%	100%
28												
29	**Gravel** Coverage:	Lots of Crushed Stone	% of Segment Length									
30		Moderate	% of Segment Length									
31		Mostly clay, minimal Gravel	% of Segment Length									
32			Sum (Must Equal to 100%)	**0%**	**0%**	**0%**	**0%**	**0%**	**0%**	**0%**	**0%**	**0%**
33												
34	Average **Ditch** Depth:	Flat/Almost Flat	~0 m deep									
35		Shallow	Less than 1.0 m deep									
36		Moderate	Average 1.0 m deep									
37		Deep	Greater than 1.0 m deep	100%	100%	100%	100%	100%	100%	100%	100%	100%
38			Sum (Must Equal to 100%)	100%	100%	100%	100%	100%	100%	100%	100%	100%
39												
40	Sideslope	1. 4:1, 2. 3:1, 5. Steeper than 3:1		2	2	2	2	2	2	2	2	2
41												
42	Standing Water:	1. None 2. Minimal - Shallow Depth 3. Moderate in multiple locations 4. Lots of standing		1	1	1	1	1	1	1	1	1
43												
44	Failures:	Number of soft spots, local failures, or blowout per section		0	1	0	0	0	0	0	0	0
45			1-5 rating conversion	0	1	0	0	0	0	0	0	0
46												
47	Summary of general condition for **all aspects**:		1. Excellent 2…3…4… 5. Failed	1	2	1	1	1	1	1	1	1
48												
49	General Comments of **overall** Section:		Any additional pertinent detail		Seal on some of the Cul-de-sac bulb has been removed and converted to gravel surface							
50												

	A	B	C	CO	CP	CQ	CR	CS	CT	CU	CV	CW	CX	CY
1	**Rural Municipality of Corman Park**													
2	Road Condition Assessment Tool													
3														
4	Reference			90	91	92	93	94	95	96	97	98	99	100
5	**Road Name:**	(Range Road = RR, Township Road = TWP, etc)		South Point Lane	South Point Drive	Victor Rd	Victor Rd	Victor Rd	Victor Rd	Victor Rd	Victor Rd	Victor Rd	McCoy Dr	Tamke Rd
6	From: (Start)	(Crossroad Intersecting)		Baker Rd	RR3051	Hwy 11	RR3050	RR3051	RR3052	RR3053	Hwy 219	RR3055	Tamke Rd	Hwy 11
7	To: (End)			RR3051	RR3051	RR3050	RR3051	RR3052	RR3053	RR3054	RR3055	River	Tamke Rd	RR3050
8														
9	**Surface** Type:	1. Asphalt 2.Seal 3. Gravel, 4. Dirt Trail / Summer Road		2	2	3	3	3	3	3	1	3	3	3
10														
11	**Surface** Width:	Shoulder-Shoulder, Or edge of Pavement (m)		7	7	12	10.5	10.5	10.5	10.5	7	10.5	8	9
12														
13	**Seal/Asphalt** Condition:	Cracking Severity (% of Corridor Affected)	1. Minor	100%	100%						100%			
14			3. Major											
15			5. Extreme											
16			Sum (Must Equal to 100%)	100%	100%	**0%**	**0%**	**0%**	**0%**	**0%**	100%	**0%**	**0%**	**0%**
17		Pothole Frequency	1. None 2. Few ….. 5. Extremely Frequent	1	1						1			
18														
19	**Surface** Condition:	Rutting Severity (% of Corridor Affected)	1. Minor	100%	100%	100%	100%	98%	100%	100%	100%	100%	100%	100%
20	(Ride / Profile)		3. Major					2%						
21			5. Extreme											
22			Sum (Must Equal to 100%)	100%	100%	100%	100%	100%	100%	100%	100%	100%	100%	100%
23														
24		Smooth	% of Segment Length	100%	100%	100%	100%	98%	100%	100%	100%	100%	100%	100%
25		Fair	% of Segment Length					2%						
26		Poor	% of Segment Length											
27			Sum (Must Equal to 100%)	100%	100%	100%	100%	100%	100%	100%	100%	100%	100%	100%
28														
29	**Gravel** Coverage:	Lots of Crushed Stone	% of Segment Length				100%	50%	100%	100%				
30		Moderate	% of Segment Length			100%		50%				100%	100%	100%
31		Mostly clay, minimal Gravel	% of Segment Length											
32			Sum (Must Equal to 100%)	**0%**	**0%**	100%	100%	100%	100%	100%	**0%**	100%	100%	100%
33														
34	Average **Ditch** Depth:	Flat/Almost Flat	~0 m deep									15%		
35		Shallow	Less than 1.0 m deep									25%		25%
36		Moderate	Average 1.0 m deep			100%	100%	100%				60%		
37		Deep	Greater than 1.0 m deep	100%	100%				100%	100%	100%		100%	75%
38			Sum (Must Equal to 100%)	100%	100%	100%	100%	100%	100%	100%	100%	100%	100%	100%
39														
40	Sideslope	1. 4:1, 2. 3:1, 5. Steeper than 3:1		2	2	2	2	2	2	2	2	3	2	2
41														
42	Standing Water:	1. None 2. Minimal - Shallow Depth 3. Moderate in multiple locations 4. Lots of standing		1	1	1	1	1	1	1	1	1	1	1
43														
44	Failures:	Number of soft spots, local failures, or blowout per section		0	0	0	0	2	0	0	0	0	0	0
45			1-5 rating conversion	0	0	0	0	2	0	0	0	0	0	0
46														
47	Summary of general condition for **all aspects**:		1. Excellent 2…3…4… 5. Failed	1	1	1	1	2	1	1	1	2	1	1
48														
49	General Comments of **overall** Section:		Any additional pertinent detail			North side is 4:1, south side is 3:1					This segment is the old Highway 219. Approximately 200m before RR3055 the pave road curves south and Victor Rd becomes a gravel road up to RR3055			
50														

	A	B	C	CZ	DA	DB	DC	DD	DE	DF
1	**Rural Municipality of Corman Park**									
2	Road Condition Assessment Tool									
3										
4	Reference			101	102	103	104	105	106	107
5	**Road Name:**	(Range Road = RR, Township Road = TWP, etc)		Tamke Rd	Tamke Rd	Tamke Rd	Tamke Rd	Tamke Rd	RR3055	RR3055
6	From: (Start)	(Crossroad Intersecting)		RR3050	RR3051	RR3052	RR3053	RR3054	Tamke Rd	600m north of Tamke Rd
7	To: (End)			RR3051	RR3052	RR3053	RR3054	RR3055	600m north	900m north of Tamke Rd
8										
9	**Surface** Type:	1. Asphalt 2.Seal 3. Gravel, 4. Dirt Trail / Summer Road		3	3	4	4	4	4	3
10										
11	**Surface** Width:	Shoulder-Shoulder, Or edge of Pavement (m)		10	10	6	6	6	6	6
12										
13	**Seal/Asphalt** Condition:	Cracking Severity (% of Corridor Affected)	1. Minor							
14			3. Major							
15			5. Extreme							
16			Sum (Must Equal to 100%)	**0%**	**0%**	**0%**	**0%**	**0%**	**0%**	**0%**
17		Pothole Frequency	1. None 2. Few ….. 5. Extremely Frequent							
18										
19	**Surface** Condition:	Rutting Severity (% of Corridor Affected)	1. Minor	100%	100%	100%	100%	100%	100%	100%
20	(Ride / Profile)		3. Major							
21			5. Extreme							
22			Sum (Must Equal to 100%)	100%	100%	100%	100%	100%	100%	100%
23										
24		Smooth	% of Segment Length	100%	100%	100%	100%	100%	100%	100%
25		Fair	% of Segment Length							
26		Poor	% of Segment Length							
27			Sum (Must Equal to 100%)	100%	100%	100%	100%	100%	100%	100%
28										
29	**Gravel** Coverage:	Lots of Crushed Stone	% of Segment Length						100%	100%
30		Moderate	% of Segment Length	100%	100%	100%	100%	100%		
31		Mostly clay, minimal Gravel	% of Segment Length							
32			Sum (Must Equal to 100%)	100%	100%	100%	100%	100%	100%	100%
33										
34	Average **Ditch** Depth:	Flat/Almost Flat	~0 m deep		10%	10%	10%	10%		
35		Shallow	Less than 1.0 m deep		15%	15%	15%	15%		
36		Moderate	Average 1.0 m deep		15%	15%	15%	15%		
37		Deep	Greater than 1.0 m deep	100%	60%	60%	60%	60%	100%	100%
38			Sum (Must Equal to 100%)	100%	100%	100%	100%	100%	100%	100%
39										
40	Sideslope	1. 4:1, 2. 3:1, 5. Steeper than 3:1		2	2	2	2	2	2	2
41										
42	Standing Water:	1. None 2. Minimal - Shallow Depth 3. Moderate in multiple locations 4. Lots of standing		1	1	1	1	1	1	1
43										
44	Failures:	Number of soft spots, local failures, or blowout per section		0	0	0	0	0	0	0
45			1-5 rating conversion	0	0	0	0	0	0	0
46										
47	Summary of general condition for **all aspects**:		1. Excellent 2…3…4… 5. Failed	2	2	2	2	2	2	2
48										
49	General Comments of **overall** Section:		Any additional pertinent detail						Transition from summer road to gravel road is at Brightwater Site	Transition from gravel road to chipseal road where beaver creek subdivision south limit is.
50									Old gravel road	

	A	B	C	DG	DH	DI	DJ	DK	DL	DM	DN	DO	DP	DQ
1	**Rural Municipality of Corman Park**													
2	Road Condition Assessment Tool													
3														
4	Reference			108	109	110	111	112	113	114	115	116	117	118
5	**Road Name:**	(Range Road = RR, Township Road = TWP, etc)		RR3055	Beaver Ridge Rd	Aspen Way	TWP 350A	TWP 350A	Waterford Rd	RR3057 ?	RR3057 ?	RR3055	RR3055	RR3054
6	From: (Start)	(Crossroad Intersecting)		900m north of Tamke Rd	RR3055	RR3055	Hwy 219	RR3057 ?	TWP 350A	TWP 350A	TWP 350A	Hwy 219	Victor Rd	Tamke Rd
7	To: (End)			Hwy 219	Cul-de-sac	Cul-de-sac	RR3057 ?	Waterford Rd	400 m North	800 m North	800 m South	Victor Rd	Baker Rd	Victor Rd
8														
9	**Surface** Type:	1. Asphalt 2.Seal 3. Gravel, 4. Dirt Trail / Summer Road		2	2	2	3	3	3	3	3	1	3	2
10														
11	**Surface** Width:	Shoulder-Shoulder, Or edge of Pavement (m)		6	6	6	9	8	6	7	7	6.5	7.5	6
12														
13	**Seal/Asphalt** Condition:	Cracking Severity (% of Corridor Affected)	1. Minor	100%	100%	100%						100%		100%
14			3. Major											
15			5. Extreme											
16			Sum (Must Equal to 100%)	100%	100%	100%	**0%**	**0%**	**0%**	**0%**	**0%**	100%	**0%**	100%
17		Pothole Frequency	1. None 2. Few ….. 5. Extremely Frequent	1	1	1						1		1
18														
19	**Surface** Condition:	Rutting Severity (% of Corridor Affected)	1. Minor	100%	100%	100%	100%	100%	100%	100%	100%	100%	100%	100%
20	(Ride / Profile)		3. Major											
21			5. Extreme											
22			Sum (Must Equal to 100%)	100%	100%	100%	100%	100%	100%	100%	100%	100%	100%	100%
23														
24		Smooth	% of Segment Length		100%	100%	100%	100%	100%		100%	100%	100%	100%
25		Fair	% of Segment Length	100%						100%				
26		Poor	% of Segment Length											
27			Sum (Must Equal to 100%)	100%	100%	100%	100%	100%	100%	100%	100%	100%	100%	100%
28														
29	**Gravel** Coverage:	Lots of Crushed Stone	% of Segment Length					70%	70%				100%	
30		Moderate	% of Segment Length				40%				95%			
31		Mostly clay, minimal Gravel	% of Segment Length				60%	30%	30%	100%	5%			
32			Sum (Must Equal to 100%)	**0%**	**0%**	**0%**	100%	100%	100%	100%	100%	**0%**	100%	**0%**
33														
34	Average **Ditch** Depth:	Flat/Almost Flat	~0 m deep			10%		5%						
35		Shallow	Less than 1.0 m deep											
36		Moderate	Average 1.0 m deep						100%	100%	100%			
37		Deep	Greater than 1.0 m deep	100%	100%	90%	100%	95%				100%	100%	100%
38			Sum (Must Equal to 100%)	100%	100%	100%	100%	100%	100%	100%	100%	100%	100%	100%
39														
40	Sideslope	1. 4:1, 2. 3:1, 5. Steeper than 3:1		2	2	2	2	2	2	2	2	2	2	2
41														
42	Standing Water:	1. None 2. Minimal - Shallow Depth 3. Moderate in multiple locations 4. Lots of standing		1	1	1	1	1	1	1	1	1	1	1
43														
44	Failures:	Number of soft spots, local failures, or blowout per section		0	0	0	0	0	0	0	0	0	0	0
45			1-5 rating conversion	0	0	0	0	0	0	0	0	0	0	0
46														
47	Summary of general condition for **all aspects**:		1. Excellent 2…3…4… 5. Failed	1	1	1	2	2	1	3	2	1	1	1
48														
49	General Comments of **overall** Section:		Any additional pertinent detail								Road extends approx 800m south of Twp350A then turns west for 500m to culdesac.	This paved road is a section on old Hwy 219		
50														

	A	B	C	DR	DS	DT	DU	DV	DW	DX	DY	DZ
1	**Rural Municipality of Corman Park**											
2	Road Condition Assessment Tool											
3												
4	Reference			119	120	121	122	123	124	125	126	127
5	**Road Name:**	(Range Road = RR, Township Road = TWP, etc)		Poplar Grove Dr	Southwinds Dr	Southwinds Pl	RR3053	RR3053	RR3053	RR3053	RR3052	RR3052
6	From: (Start)	(Crossroad Intersecting)		RR3054	RR3054	Southwinds Dr	Tamke Rd	1.6k South	Victor Rd	1 km south of Baker Rd	Victor Rd	Tamke Rd
7	To: (End)			West to cul-de-sac	RR3054	East to Cul-de-sac	1.6k North	Victor Rd	1 km south of Baker Rd	Baker Rd	Baker Rd	Victor Rd
8												
9	**Surface** Type:	1. Asphalt 2.Seal 3. Gravel, 4. Dirt Trail / Summer Road		2	2	2	4	3	3	1	3	3
10												
11	**Surface** Width:	Shoulder-Shoulder, Or edge of Pavement (m)		5.5	6	7		7	8.5	8	8.5	8.5
12												
13	**Seal/Asphalt** Condition:	Cracking Severity (% of Corridor Affected)	1. Minor	100%	100%	100%				100%		
14			3. Major									
15			5. Extreme									
16			Sum (Must Equal to 100%)	100%	100%	100%	**0%**	**0%**	**0%**	100%	**0%**	**0%**
17		Pothole Frequency	1. None 2. Few ….. 5. Extremely Frequent	1	1	1				1		
18												
19	**Surface** Condition:	Rutting Severity (% of Corridor Affected)	1. Minor	100%	100%	100%		100%	100%	100%	100%	100%
20	(Ride / Profile)		3. Major									
21			5. Extreme									
22			Sum (Must Equal to 100%)	100%	100%	100%	**0%**	100%	100%	100%	100%	100%
23												
24		Smooth	% of Segment Length	100%	100%	100%		100%	100%	100%	100%	100%
25		Fair	% of Segment Length									
26		Poor	% of Segment Length									
27			Sum (Must Equal to 100%)	100%	100%	100%	**0%**	100%	100%	100%	100%	100%
28												
29	**Gravel** Coverage:	Lots of Crushed Stone	% of Segment Length					100%	100%		100%	75%
30		Moderate	% of Segment Length									25%
31		Mostly clay, minimal Gravel	% of Segment Length									
32			Sum (Must Equal to 100%)	**0%**	**0%**	**0%**	**0%**	100%	100%	**0%**	100%	100%
33												
34	Average **Ditch** Depth:	Flat/Almost Flat	~0 m deep									20%
35		Shallow	Less than 1.0 m deep									20%
36		Moderate	Average 1.0 m deep	50%								
37		Deep	Greater than 1.0 m deep	50%	100%	100%		100%	100%	100%	100%	60%
38			Sum (Must Equal to 100%)	100%	100%	100%	**0%**	100%	100%	100%	100%	100%
39												
40	Sideslope	1. 4:1, 2. 3:1, 5. Steeper than 3:1		2	2	2		2	2	2	2	2
41												
42	Standing Water:	1. None 2. Minimal - Shallow Depth 3. Moderate in multiple locations 4. Lots of standing		1	1	1		1	1	1	1	1
43												
44	Failures:	Number of soft spots, local failures, or blowout per section		0	0	0		0	0	0	0	0
45			1-5 rating conversion	0	0	0	0	0	0	0	0	0
46												
47	Summary of general condition for **all aspects**:		1. Excellent 2…3…4… 5. Failed	1	1	1		1	1	1	1	1
48												
49	General Comments of **overall** Section:		Any additional pertinent detail									
50												

	A	B	C	EA	EB	EC	ED	EE	EF	EG	EH	EI	EJ
1	**Rural Municipality of Corman Park**												
2	Road Condition Assessment Tool												
3													
4	Reference			128	129	130	131	132	133	134	135	136	137
5	**Road Name:**	(Range Road = RR, Township Road = TWP, etc)		RR3051	RR3051	RR3050	RR3050	Grasswood Rd	Grasswood Rd	Grasswood Rd	Grasswood Rd	Poplar Rd	Pony Trail
6	From: (Start)	(Crossroad Intersecting)		Tamke Rd	Baker Rd	Tamke Rd	Victor Rd	RR3052	Clarence Ave	Hwy 219	RR3055	Grasswood Rd	Poplar Rd
7	To: (End)			Victor Rd	To 1.5 km south	Victor Rd	Hwy 11	Clarence Ave	Hwy 219	RR3055	TWP 360 dead end	Pony Trail	Poplar Rd
8													
9	**Surface** Type:	1. Asphalt 2.Seal 3. Gravel, 4. Dirt Trail / Summer Road		3	3	3	3	1	1	1	1	1	1
10													
11	**Surface** Width:	Shoulder-Shoulder, Or edge of Pavement (m)		8	7	8.5	7.5	8.5	8	8	7.5	6	6
12													
13	**Seal/Asphalt** Condition:	Cracking Severity (% of Corridor Affected)	1. Minor					100%	100%	100%	100%	100%	100%
14			3. Major										
15			5. Extreme										
16			Sum (Must Equal to 100%)	**0%**	**0%**	**0%**	**0%**	100%	100%	100%	100%	100%	100%
17		Pothole Frequency	1. None 2. Few ….. 5. Extremely Frequent					1	1	1	1	1	1
18													
19	**Surface** Condition:	Rutting Severity (% of Corridor Affected)	1. Minor	100%	100%	100%	100%	100%	100%	100%	100%	100%	100%
20	(Ride / Profile)		3. Major										
21			5. Extreme										
22			Sum (Must Equal to 100%)	100%	100%	100%	100%	100%	100%	100%	100%	100%	100%
23													
24		Smooth	% of Segment Length	100%	100%	100%	100%	100%	100%	25%		100%	100%
25		Fair	% of Segment Length							75%	100%		
26		Poor	% of Segment Length										
27			Sum (Must Equal to 100%)	100%	100%	100%	100%	100%	100%	100%	100%	100%	100%
28													
29	**Gravel** Coverage:	Lots of Crushed Stone	% of Segment Length	50%			25%						
30		Moderate	% of Segment Length	50%	100%	100%	75%						
31		Mostly clay, minimal Gravel	% of Segment Length										
32			Sum (Must Equal to 100%)	100%	100%	100%	100%	**0%**	**0%**	**0%**	**0%**	**0%**	**0%**
33													
34	Average **Ditch** Depth:	Flat/Almost Flat	~0 m deep	30%	30%	30%							
35		Shallow	Less than 1.0 m deep	20%	60%	30%							
36		Moderate	Average 1.0 m deep			10%	10%					10%	10%
37		Deep	Greater than 1.0 m deep	50%	10%	30%	90%	100%	100%	100%	100%	90%	90%
38			Sum (Must Equal to 100%)	100%	100%	100%	100%	100%	100%	100%	100%	100%	100%
39													
40	Sideslope	1. 4:1, 2. 3:1, 5. Steeper than 3:1		2	2	2	2	2	2	2	2	2	2
41													
42	Standing Water:	1. None 2. Minimal - Shallow Depth 3. Moderate in multiple locations 4. Lots of standing		1	1	1	1	1	1	1	1	1	1
43													
44	Failures:	Number of soft spots, local failures, or blowout per section		0	0	0	0	0	0	0	0	0	0
45			1-5 rating conversion	0	0	0	0	0	0	0	0	0	0
46													
47	Summary of general condition for **all aspects**:		1. Excellent 2…3…4… 5. Failed	2	2	1	1	1	1	2	2	1	1
48													
49	General Comments of **overall** Section:		Any additional pertinent detail	South portion of this segment has no ditches and minimal gravel. It is graded to about 10m wide. There are a few homes on this substandard section							Newer asphalt for about 300m from Hwy 219, then the remainder of the road has been patched and/or chip sealed resulting moderate ride quality	Recent asphalt in excellent condition	Recent asphalt in excellent condition
50													

	A	B	C	EK	EL	EM	EN	EO	EP	EQ	ER	ES	ET
1	**Rural Municipality of Corman Park**												
2	Road Condition Assessment Tool												
3													
4	Reference			138	139	140	141	142	143	144	145	146	147
5	**Road Name:**	(Range Road = RR, Township Road = TWP, etc)		Cherry Lane	Roseberry Hts	Country Lane	Crocus Dr	Wildwood Dr	Swityk Lane	Prairie Lane	RR3051	Ash wood Dr	RR3052
6	From: (Start)	(Crossroad Intersecting)		Pony Trail	Pony Trail	Pony Trail	Pony Trail	Pony Trail	Grasswood Rd	Grasswood Rd	Baker Rd	RR3051	Baker Rd
7	To: (End)			West to dead end	West to dead end	West to dead end	RR3055	RR3055	South to dead end	Clarence Ave	1.6km North	RR3051	2.4 km North
8													
9	**Surface** Type:	1. Asphalt 2.Seal 3. Gravel, 4. Dirt Trail / Summer Road		1	1	1	1	1	2	2	3	2	3
10													
11	**Surface** Width:	Shoulder-Shoulder, Or edge of Pavement (m)		5.5	5.5	5.5	5.5	6	6	5	8	7.5	8
12													
13	**Seal/Asphalt** Condition:	Cracking Severity (% of Corridor Affected)	1. Minor	100%	100%	100%	100%	100%	100%	100%		100%	
14			3. Major										
15			5. Extreme										
16			Sum (Must Equal to 100%)	100%	100%	100%	100%	100%	100%	100%	**0%**	100%	**0%**
17		Pothole Frequency	1. None 2. Few ….. 5. Extremely Frequent	1	1	1	1	1	2	1		1	
18													
19	**Surface** Condition:	Rutting Severity (% of Corridor Affected)	1. Minor	100%	100%	100%	100%	100%	90%	100%	100%	100%	100%
20	(Ride / Profile)		3. Major						10%				
21			5. Extreme										
22			Sum (Must Equal to 100%)	100%	100%	100%	100%	100%	100%	100%	100%	100%	100%
23													
24		Smooth	% of Segment Length	100%	100%	100%	100%	100%	90%	100%	100%	100%	100%
25		Fair	% of Segment Length						10%				
26		Poor	% of Segment Length										
27			Sum (Must Equal to 100%)	100%	100%	100%	100%	100%	100%	100%	100%	100%	100%
28													
29	**Gravel** Coverage:	Lots of Crushed Stone	% of Segment Length								100%		100%
30		Moderate	% of Segment Length										
31		Mostly clay, minimal Gravel	% of Segment Length										
32			Sum (Must Equal to 100%)	**0%**	**0%**	**0%**	**0%**	**0%**	**0%**	**0%**	100%	**0%**	100%
33													
34	Average **Ditch** Depth:	Flat/Almost Flat	~0 m deep										
35		Shallow	Less than 1.0 m deep						30%	30%			
36		Moderate	Average 1.0 m deep	10%					20%	20%	70%		60%
37		Deep	Greater than 1.0 m deep	90%	100%	100%	100%	100%	50%	50%	30%	100%	40%
38			Sum (Must Equal to 100%)	100%	100%	100%	100%	100%	100%	100%	100%	100%	100%
39													
40	Sideslope	1. 4:1, 2. 3:1, 5. Steeper than 3:1		2	2	2	2	2	3	1	2	2	2
41													
42	Standing Water:	1. None 2. Minimal - Shallow Depth 3. Moderate in multiple locations 4. Lots of standing		1	1	1	1	1	1	1	1	1	1
43													
44	Failures:	Number of soft spots, local failures, or blowout per section		0	0	0	0	0	1	0	0	0	0
45			1-5 rating conversion	0	0	0	0	0	1	0	0	0	0
46													
47	Summary of general condition for **all aspects**:		1. Excellent 2…3…4… 5. Failed	1	1	1	1	1	3	2	1	1	1
48													
49	General Comments of **overall** Section:		Any additional pertinent detail	Recent asphalt in excellent condition	Recent asphalt in excellent condition	Recent asphalt in excellent condition	Recent asphalt in excellent condition	Recent asphalt in excellent condition	Cul-de-sac surface deterioration	Aging chipseal looks good but ride is bumpy in places			
50													

	A	B	C	EU	EV	EW	EX	EY	EZ	FA	FB	FC	FD
1	**Rural Municipality of Corman Park**												
2	Road Condition Assessment Tool												
3													
4	Reference			148	149	150	151	152	153	154	155	156	157
5	**Road Name:**	(Range Road = RR, Township Road = TWP, etc)		Clarence Ave	Clarence Ave	Ravenswood	Eldorado Lane	Edgemont	Eleanor St	Middleton Rd	Hill St	Caron Cr	Hill St
6	From: (Start)	(Crossroad Intersecting)		Baker Rd	Grasswood Rd	Clarence Ave	Clarence Ave	Clarence Ave	Clarence Ave	Eleanor St	Clarence Ave	Hill St	Clarence Ave
7	To: (End)			Grasswood Rd	1.6km north	West	Clarence Ave	Clarence Ave	Middleton Rd	Clarence Ave	Caron Cr	Middleton Rd	West to dead end
8													
9	**Surface** Type:	1. Asphalt 2.Seal 3. Gravel, 4. Dirt Trail / Summer Road		1	2	1	1	1	2	2	2	2	2
10													
11	**Surface** Width:	Shoulder-Shoulder, Or edge of Pavement (m)		8	8.5	7	7	7	6	6.5	6.5	6	6
12													
13	**Seal/Asphalt** Condition:	Cracking Severity (% of Corridor Affected)	1. Minor	100%	100%	100%	100%	100%	100%	100%	100%	100%	100%
14			3. Major										
15			5. Extreme										
16			Sum (Must Equal to 100%)	100%	100%	100%	100%	100%	100%	100%	100%	100%	100%
17		Pothole Frequency	1. None 2. Few ….. 5. Extremely Frequent	1	1	1	1	1	1	1	1	1	1
18													
19	**Surface** Condition:	Rutting Severity (% of Corridor Affected)	1. Minor	100%	100%	100%	100%	100%	100%	100%	100%	100%	100%
20	(Ride / Profile)		3. Major										
21			5. Extreme										
22			Sum (Must Equal to 100%)	100%	100%	100%	100%	100%	100%	100%	100%	100%	100%
23													
24		Smooth	% of Segment Length	100%	100%	100%	100%	100%	100%	100%	100%	100%	100%
25		Fair	% of Segment Length										
26		Poor	% of Segment Length										
27			Sum (Must Equal to 100%)	100%	100%	100%	100%	100%	100%	100%	100%	100%	100%
28													
29	**Gravel** Coverage:	Lots of Crushed Stone	% of Segment Length										
30		Moderate	% of Segment Length										
31		Mostly clay, minimal Gravel	% of Segment Length										
32			Sum (Must Equal to 100%)	**0%**	**0%**	**0%**	**0%**	**0%**	**0%**	**0%**	**0%**	**0%**	**0%**
33													
34	Average **Ditch** Depth:	Flat/Almost Flat	~0 m deep										
35		Shallow	Less than 1.0 m deep										
36		Moderate	Average 1.0 m deep			100%		70%	100%	80%	100%	100%	80%
37		Deep	Greater than 1.0 m deep	100%	100%		100%	30%		20%			20%
38			Sum (Must Equal to 100%)	100%	100%	100%	100%	100%	100%	100%	100%	100%	100%
39													
40	Sideslope	1. 4:1, 2. 3:1, 5. Steeper than 3:1		2	2	1	2	2	1	1	1	1	2
41													
42	Standing Water:	1. None 2. Minimal - Shallow Depth 3. Moderate in multiple locations 4. Lots of standing		1	1	1	1	1	1	1	1	1	1
43													
44	Failures:	Number of soft spots, local failures, or blowout per section		0	0	0	0	0	0	0	0	0	0
45		1-5 rating conversion		0	0	0	0	0	0	0	0	0	0
46													
47	Summary of general condition for **all aspects**:		1. Excellent 2…3…4… 5. Failed	1	1	1	1	1	1	1	1	1	1
48													
49	General Comments of **overall** Section:		Any additional pertinent detail		This segment has 8.5m chip seal surface over 9m wide asphalt	New asphalt road. Other roads branching off of Ravenswood have no name signs posted yet		New asphalt road. Other roads branching off Edgemont main road have no name signs posted yet					
50													

	A	B	C	FE	FF	FG	FH	FI	FJ	FK	FL	FM
1	**Rural Municipality of Corman Park**											
2	Road Condition Assessment Tool											
3												
4	Reference			158	159	160	161	162	163	164	165	166
5	**Road Name:**	(Range Road = RR, Township Road = TWP, etc)		Browne Cove	Gabriel Rd	Diana St	Crossmount Rd	Fortingall Rd	Fear an Path	Fortingall Terrace	Fortingall Court	Aberfeldy Lane
6	From: (Start)	(Crossroad Intersecting)		Clarence Ave	Clarence Ave	Clarence Ave	Hwy 219	Crossmount Rd	Fortingall Rd	Fortingall Rd	Fortingall Rd	Fortingall Rd
7	To: (End)			Hill St	West to dead end	West to cul-de-sac	Dunkeld Wynd	Crossmount Rd	Fortingall Rd	Cul-de-sac	Cul-de-sac	Cul-de-sacs
8												
9	**Surface** Type:	1. Asphalt 2.Seal 3. Gravel, 4. Dirt Trail / Summer Road		1	2	2	1	1	1	1	1	1
10												
11	**Surface** Width:	Shoulder-Shoulder, Or edge of Pavement (m)		7.5	6	6	7.5	7	7	8	7	7
12												
13	**Seal/Asphalt** Condition:	Cracking Severity (% of Corridor Affected)	1. Minor	100%	100%	100%	100%	100%	100%	100%	100%	100%
14			3. Major									
15			5. Extreme									
16			Sum (Must Equal to 100%)	100%	100%	100%	100%	100%	100%	100%	100%	100%
17		Pothole Frequency	1. None 2. Few ….. 5. Extremely Frequent	1	1	1	1	1	1	1	1	1
18												
19	**Surface** Condition:	Rutting Severity (% of Corridor Affected)	1. Minor	100%	100%	100%	100%	100%	100%	100%	100%	100%
20	(Ride / Profile)		3. Major									
21			5. Extreme									
22			Sum (Must Equal to 100%)	100%	100%	100%	100%	100%	100%	100%	100%	100%
23												
24		Smooth	% of Segment Length	100%	100%	90%	100%	100%	100%	100%	100%	100%
25		Fair	% of Segment Length			10%						
26		Poor	% of Segment Length									
27			Sum (Must Equal to 100%)	100%	100%	100%	100%	100%	100%	100%	100%	100%
28												
29	**Gravel** Coverage:	Lots of Crushed Stone	% of Segment Length									
30		Moderate	% of Segment Length									
31		Mostly clay, minimal Gravel	% of Segment Length									
32			Sum (Must Equal to 100%)	**0%**	**0%**	**0%**	**0%**	**0%**	**0%**	**0%**	**0%**	**0%**
33												
34	Average **Ditch** Depth:	Flat/Almost Flat	~0 m deep									
35		Shallow	Less than 1.0 m deep					100%	100%	100%	100%	
36		Moderate	Average 1.0 m deep		60%	40%	100%					100%
37		Deep	Greater than 1.0 m deep	100%	40%	60%						
38			Sum (Must Equal to 100%)	100%	100%	100%	100%	100%	100%	100%	100%	100%
39												
40	Sideslope	1. 4:1, 2. 3:1, 5. Steeper than 3:1		2	2	1	1	1	1	1	1	1
41												
42	Standing Water:	1. None 2. Minimal - Shallow Depth 3. Moderate in multiple locations 4. Lots of standing		1	1	1	1	1	1	1	1	1
43												
44	Failures:	Number of soft spots, local failures, or blowout per section		0	0	0	0	0	0	0	0	0
45			1-5 rating conversion	0	0	0	0	0	0	0	0	0
46												
47	Summary of general condition for **all aspects**:		1. Excellent 2…3…4… 5. Failed	1	1	1	1	1	1	1	1	1
48												
49	General Comments of **overall** Section:		Any additional pertinent detail	E-W leg from Clarence Ave to N-S leg is newer asphalt. N-S leg at wets end has recycled asphalt gravel surface	Gabriel Road goes west to dead end and then turns south for about 300m for access to the last acreage. This N-S section is not as smooth as the main section		West of Dunkeld Wynd there are new road's almost completed and new housing builds in progress	At the west end of this crescent the road is temporary gravel road for the last 200m				Road forms a T with two cul-de-sacs
50												

	A	B	C	FN	FO	FP	FQ	FR	FS	FT	FU
1	**Rural Municipality of Corman Park**										
2	Road Condition Assessment Tool										
3											
4	Reference			167	168	169	170	171	172	173	174
5	**Road Name:**	(Range Road = RR, Township Road = TWP, etc)		Glen Road	Wood Meadows Lane	Wood Meadows Place	Parklands Rd	RR3055	RR3055	Cartwright St	Cartwright St
6	From: (Start)	(Crossroad Intersecting)		Crossmount Rd	Hwy 219	Wood Meadows Lane	Hwy 219	Baker Rd	Grasswood Rd	Hwy 219	RR3055
7	To: (End)			Cul-de-sac	Cul-de-sac	Cul-de-sac	Cul-de-sac	Grasswood Rd	Cartwright St	RR3055	Saskatchewan Cr
8											
9	**Surface** Type:	1. Asphalt 2.Seal 3. Gravel, 4. Dirt Trail / Summer Road		1	2	2	2	1	1	1	1
10											
11	**Surface** Width:	Shoulder-Shoulder, Or edge of Pavement (m)		7	7	7	6	7	6.5	6.5	6.5
12											
13	**Seal/Asphalt** Condition:	Cracking Severity (% of Corridor Affected)	1. Minor	100%	100%	100%	100%	100%	100%	60%	100%
14			3. Major							40%	
15			5. Extreme								
16			Sum (Must Equal to 100%)	100%	100%	100%	100%	100%	100%	100%	100%
17		Pothole Frequency	1. None 2. Few ….. 5. Extremely Frequent	1	1	1	1	1	1	3	2
18											
19	**Surface** Condition:	Rutting Severity (% of Corridor Affected)	1. Minor	100%	100%	100%	100%	100%	100%	80%	100%
20	(Ride / Profile)		3. Major							20%	
21			5. Extreme								
22			Sum (Must Equal to 100%)	100%	100%	100%	100%	100%	100%	100%	100%
23											
24		Smooth	% of Segment Length	100%	100%	100%	90%	50%	70%		60%
25		Fair	% of Segment Length				10%	50%	30%	70%	40%
26		Poor	% of Segment Length							30%	
27			Sum (Must Equal to 100%)	100%	100%	100%	100%	100%	100%	100%	100%
28											
29	**Gravel** Coverage:	Lots of Crushed Stone	% of Segment Length								
30		Moderate	% of Segment Length								
31		Mostly clay, minimal Gravel	% of Segment Length								
32			Sum (Must Equal to 100%)	**0%**	**0%**	**0%**	**0%**	**0%**	**0%**	**0%**	**0%**
33											
34	Average **Ditch** Depth:	Flat/Almost Flat	~0 m deep	100%				20%			
35		Shallow	Less than 1.0 m deep					10%			
36		Moderate	Average 1.0 m deep				30%			20%	
37		Deep	Greater than 1.0 m deep		100%	100%	70%	70%	100%	80%	100%
38			Sum (Must Equal to 100%)	100%	100%	100%	100%	100%	100%	100%	100%
39											
40	Sideslope	1. 4:1, 2. 3:1, 5. Steeper than 3:1		1	2	2	2	3	3	3	3
41											
42	Standing Water:	1. None 2. Minimal - Shallow Depth 3. Moderate in multiple locations 4. Lots of standing		1	1	1	1	1	1	1	1
43											
44	Failures:	Number of soft spots, local failures, or blowout per section		0	0	0	0	0	0	10	0
45			1-5 rating conversion	0	0	0	0	0	0	5	0
46											
47	Summary of general condition for **all aspects**:		1. Excellent 2…3…4… 5. Failed	1	1	1	2	1	1	4	2
48											
49	General Comments of **overall** Section:		Any additional pertinent detail				Cul-de-sac is dead end road with some gravel outside of the roadway edge for turning around			Pavement is in poor condition. Numerous patched sections and current failures and surface potholes. Surface is heavily oxidized.	
50											

	A	B	C	FV	FW	FX	FY	FZ	GA	GB
1	**Rural Municipality of Corman Park**									
2	Road Condition Assessment Tool									
3										
4	Reference			175	176	177	178	179	180	181
5	**Road Name:**	(Range Road = RR, Township Road = TWP, etc)		Saskatchewan Cr	Makaroff St	Pearson St	Schoolhouse St	Reginald Ave	Halliburton Ave	Mount Royal Ave
6	From: (Start)	(Crossroad Intersecting)		Cartwright St	RR3055	RR3055	Strath on a Ave	Cartwright St	Cartwright St	Cartwright St
7	To: (End)			Chief Whitecap Park	West to dead end	West to dead end	Reginald Ave	1.4km south	1.4km south	1.4km south
8										
9	**Surface** Type:	1. Asphalt 2.Seal 3. Gravel, 4. Dirt Trail / Summer Road		1	2	2	2	2	2	2
10										
11	**Surface** Width:	Shoulder-Shoulder, Or edge of Pavement (m)		6.5	6	6	6	6	6	6
12										
13	**Seal/Asphalt** Condition:	Cracking Severity (% of Corridor Affected)	1. Minor	100%	100%	100%	100%	100%	100%	100%
14			3. Major							
15			5. Extreme							
16			Sum (Must Equal to 100%)	100%	100%	100%	100%	100%	100%	100%
17		Pothole Frequency	1. None 2. Few ….. 5. Extremely Frequent	2	1	1	1	1	1	1
18										
19	**Surface** Condition:	Rutting Severity (% of Corridor Affected)	1. Minor	100%	100%	100%	100%	100%	100%	100%
20	(Ride / Profile)		3. Major							
21			5. Extreme							
22			Sum (Must Equal to 100%)	100%	100%	100%	100%	100%	100%	100%
23										
24		Smooth	% of Segment Length	60%	100%	100%	100%	100%	70%	80%
25		Fair	% of Segment Length	40%					30%	20%
26		Poor	% of Segment Length							
27			Sum (Must Equal to 100%)	100%	100%	100%	100%	100%	100%	100%
28										
29	**Gravel** Coverage:	Lots of Crushed Stone	% of Segment Length							
30		Moderate	% of Segment Length							
31		Mostly clay, minimal Gravel	% of Segment Length							
32			Sum (Must Equal to 100%)	**0%**	**0%**	**0%**	**0%**	**0%**	**0%**	**0%**
33										
34	Average **Ditch** Depth:	Flat/Almost Flat	~0 m deep				5%		5%	5%
35		Shallow	Less than 1.0 m deep	20%			5%		5%	5%
36		Moderate	Average 1.0 m deep	40%	100%	10%	10%	50%	20%	20%
37		Deep	Greater than 1.0 m deep	40%		90%	80%	50%	70%	70%
38			Sum (Must Equal to 100%)	100%	100%	100%	100%	100%	100%	100%
39										
40	Sideslope	1. 4:1, 2. 3:1, 5. Steeper than 3:1		2	1	2	2	2	2	2
41										
42	Standing Water:	1. None 2. Minimal - Shallow Depth 3. Moderate in multiple locations 4. Lots of standing		1	1	1	1	1	1	1
43										
44	Failures:	Number of soft spots, local failures, or blowout per section		0	0	0	0	0	0	0
45			1-5 rating conversion	0	0	0	0	0	0	0
46										
47	Summary of general condition for **all aspects**:		1. Excellent 2…3…4… 5. Failed	2	1	1	1	1	1	1
48										
49	General Comments of **overall** Section:		Any additional pertinent detail	The last 300m leading into the parking lot is gravel surface and extends another 700m to an acreage access. Beyond this point, going south is a summer trail.						
50										

Stantec Consulting Ltd.
300 - 1919 Rose St

Regina, Saskatchewan, Canada S4P 3P1
306 781 6400 erin.harms@stantec.com

Count Name: T1 (Floral Rd & Haight Rd)
Site Code:
Start Date: 05-30-2023

Turning Movement Data

Start Time	Haight Rd Southbound					Floral Rd Westbound					Haight Rd Northbound					Floral Rd Eastbound					
	Right	Thru	Left	U-Turn	App. Total	Right	Thru	Left	U-Turn	App. Total	Right	Thru	Left	U-Turn	App. Total	Right	Thru	Left	U-Turn	App. Total	Int. Total
12:45 PM	0	2	0	0	2	0	0	0	0	0	0	1	0	0	1	0	1	0	0	1	4
Hourly Total	0	2	0	0	2	0	0	0	0	0	0	1	0	0	1	0	1	0	0	1	4
1:00 PM	0	1	1	0	2	1	0	0	0	1	0	0	0	0	0	0	2	1	0	3	6
1:15 PM	0	0	0	0	0	1	1	0	0	2	1	0	0	0	1	0	3	0	0	3	6
1:30 PM	1	0	3	0	4	0	1	0	0	1	0	0	0	0	0	0	0	0	0	0	5
1:45 PM	1	0	1	0	2	0	0	1	0	1	0	2	0	0	2	1	3	0	0	4	9
Hourly Total	2	1	5	0	8	2	2	1	0	5	1	2	0	0	3	1	8	1	0	10	26
2:00 PM	0	0	1	0	1	0	0	0	0	0	0	2	0	0	2	0	1	0	0	1	4
2:15 PM	1	0	0	0	1	0	0	0	0	0	0	0	0	0	0	0	0	0	0	0	1
2:30 PM	0	1	0	0	1	0	2	0	0	2	0	0	0	0	0	1	0	0	0	1	4
2:45 PM	0	0	0	0	0	0	3	0	0	3	0	0	0	0	0	0	2	0	0	2	5
Hourly Total	1	1	1	0	3	0	5	0	0	5	0	2	0	0	2	1	3	0	0	4	14
3:00 PM	0	1	1	0	2	0	1	0	0	1	0	1	0	0	1	0	1	0	0	1	5
3:15 PM	0	1	0	0	1	0	2	0	0	2	0	1	1	0	2	0	3	0	0	3	8
3:30 PM	0	1	0	0	1	2	3	0	0	5	0	0	0	0	0	0	1	0	0	1	7
3:45 PM	1	0	1	0	2	0	2	0	0	2	0	1	0	0	1	0	0	0	0	0	5
Hourly Total	1	3	2	0	6	2	8	0	0	10	0	3	1	0	4	0	5	0	0	5	25
4:00 PM	0	2	0	0	2	0	0	0	0	0	1	2	0	0	3	0	2	0	0	2	7
4:15 PM	0	1	1	0	2	0	2	0	0	2	1	0	0	0	1	1	1	0	0	2	7
4:30 PM	0	3	0	0	3	0	2	0	0	2	0	0	0	0	0	0	2	0	0	2	7
4:45 PM	1	1	0	0	2	1	1	0	0	2	0	0	0	0	0	0	3	0	0	3	7
Hourly Total	1	7	1	0	9	1	5	0	0	6	2	2	0	0	4	1	8	0	0	9	28
5:00 PM	0	0	0	0	0	1	0	0	0	1	0	0	0	0	0	0	1	0	0	1	2
5:15 PM	0	0	0	0	0	0	2	0	0	2	0	0	0	0	0	2	2	0	0	4	6
5:30 PM	0	0	0	0	0	0	2	0	0	2	0	0	1	0	1	1	4	0	0	5	8
5:45 PM	0	0	1	0	1	0	1	0	0	1	0	1	0	0	1	0	2	0	0	2	5
Hourly Total	0	0	1	0	1	1	5	0	0	6	0	1	1	0	2	3	9	0	0	12	21
6:00 PM	0	2	0	0	2	0	5	0	0	5	0	0	0	0	0	1	5	0	0	6	13
6:15 PM	0	0	1	0	1	0	0	1	0	1	0	0	0	0	0	2	1	0	0	3	5
6:30 PM	0	0	1	0	1	0	0	0	0	0	0	0	1	0	1	1	3	0	0	4	6
6:45 PM	0	1	0	0	1	0	4	0	0	4	0	1	0	0	1	0	1	0	0	1	7
Hourly Total	0	3	2	0	5	0	9	1	0	10	0	1	1	0	2	4	10	0	0	14	31
7:00 PM	0	0	0	0	0	0	0	0	0	0	0	2	1	0	3	0	0	0	0	0	3
7:15 PM	0	1	2	0	3	0	2	0	0	2	0	0	0	0	0	0	3	0	0	3	8
7:30 PM	0	0	2	0	2	0	0	0	0	0	0	0	0	0	0	0	2	0	0	2	4
7:45 PM	0	0	2	0	2	0	1	0	0	1	0	0	0	0	0	1	5	0	0	6	9

Hourly Total	0	1	6	0	7	0	3	0	0	3	0	2	1	0	3	1	10	0	0	11	24
8:00 PM	0	0	0	0	0	0	0	0	0	0	0	0	1	0	1	0	3	0	0	3	4
8:15 PM	0	1	0	0	1	0	0	1	0	1	0	0	0	0	0	0	0	0	0	0	2
8:30 PM	0	0	1	0	1	0	0	0	0	0	0	1	0	0	1	0	1	0	0	1	3
8:45 PM	0	0	0	0	0	0	0	0	0	0	0	0	0	0	0	0	0	0	0	0	0
Hourly Total	0	1	1	0	2	0	0	1	0	1	0	1	1	0	2	0	4	0	0	4	9
9:00 PM	0	0	0	0	0	1	4	0	0	5	0	0	2	0	2	0	1	0	0	1	8
9:15 PM	0	0	1	0	1	5	0	0	0	5	1	0	0	0	1	0	1	0	0	1	8
9:30 PM	0	0	0	0	0	0	0	0	0	0	0	0	0	0	0	0	2	0	0	2	2
9:45 PM	0	0	0	0	0	0	0	0	0	0	0	0	0	0	0	0	2	0	0	2	2
Hourly Total	0	0	1	0	1	6	4	0	0	10	1	0	2	0	3	0	6	0	0	6	20
10:00 PM	0	0	0	0	0	0	0	0	0	0	0	0	0	0	0	0	0	0	0	0	0
10:15 PM	0	0	0	0	0	0	0	0	0	0	0	0	0	0	0	0	0	0	0	0	0
10:30 PM	0	1	0	0	1	0	0	0	0	0	0	0	0	0	0	0	0	0	0	0	1
10:45 PM	0	0	0	0	0	0	0	0	0	0	0	0	0	0	0	0	0	0	0	0	0
Hourly Total	0	1	0	0	1	0	0	0	0	0	0	0	0	0	0	0	0	0	0	0	1
11:00 PM	0	0	0	0	0	0	0	0	0	0	0	0	0	0	0	0	0	0	0	0	0
11:15 PM	0	0	0	0	0	0	0	0	0	0	0	0	0	0	0	0	0	0	0	0	0
11:30 PM	0	0	0	0	0	0	0	0	0	0	0	0	0	0	0	0	0	0	0	0	0
11:45 PM	0	0	0	0	0	0	0	0	0	0	0	0	0	0	0	0	1	0	0	1	1
Hourly Total	0	0	0	0	0	0	0	0	0	0	0	0	0	0	0	0	1	0	0	1	1
12:00 AM	0	0	0	0	0	0	0	0	0	0	0	0	0	0	0	0	0	0	0	0	0
12:15 AM	0	0	0	0	0	0	0	0	0	0	0	0	0	0	0	0	0	0	0	0	0
12:30 AM	0	0	1	0	1	0	0	0	0	0	0	0	0	0	0	0	0	0	0	0	1
12:45 AM	0	0	0	0	0	0	0	0	0	0	0	0	0	0	0	0	0	0	0	0	0
Hourly Total	0	0	1	0	1	0	0	0	0	0	0	0	0	0	0	0	0	0	0	0	1
1:00 AM	0	1	0	0	1	0	0	0	0	0	0	0	0	0	0	0	0	0	0	0	1
1:15 AM	0	0	0	0	0	0	0	0	0	0	0	0	0	0	0	0	0	0	0	0	0
1:30 AM	0	0	0	0	0	0	0	0	0	0	0	0	0	0	0	0	0	0	0	0	0
1:45 AM	0	0	0	0	0	0	0	0	0	0	0	0	0	0	0	0	0	0	0	0	0
Hourly Total	0	1	0	0	1	0	0	0	0	0	0	0	0	0	0	0	0	0	0	0	1
2:00 AM	2	0	0	0	2	0	0	0	0	0	0	0	0	0	0	0	0	0	0	0	2
2:15 AM	0	0	0	0	0	0	0	0	0	0	0	0	0	0	0	0	0	0	0	0	0
2:30 AM	0	0	0	0	0	0	0	0	0	0	0	0	0	0	0	0	0	0	0	0	0
2:45 AM	0	0	0	0	0	0	0	0	0	0	0	0	0	0	0	0	0	0	0	0	0
Hourly Total	2	0	0	0	2	0	0	0	0	0	0	0	0	0	0	0	0	0	0	0	2
3:00 AM	0	0	0	0	0	0	0	0	0	0	0	0	0	0	0	0	0	0	0	0	0
3:15 AM	0	0	0	0	0	0	0	0	0	0	0	0	0	0	0	0	0	0	0	0	0
3:30 AM	0	0	0	0	0	0	0	0	0	0	0	0	0	0	0	0	0	0	0	0	0
3:45 AM	0	0	0	0	0	0	0	0	0	0	0	0	0	0	0	0	0	0	0	0	0
Hourly Total	0	0	0	0	0	0	0	0	0	0	0	0	0	0	0	0	0	0	0	0	0
4:00 AM	0	0	0	0	0	0	0	0	0	0	0	0	0	0	0	0	0	0	0	0	0
4:15 AM	0	0	0	0	0	0	0	0	0	0	0	0	0	0	0	0	0	0	0	0	0
4:30 AM	0	0	0	0	0	0	0	0	0	0	0	0	0	0	0	0	0	0	0	0	0
4:45 AM	0	0	0	0	0	0	1	0	0	1	0	0	0	0	0	0	0	0	0	0	1
Hourly Total	0	0	0	0	0	0	1	0	0	1	0	0	0	0	0	0	0	0	0	0	1
5:00 AM	0	0	0	0	0	0	0	0	0	0	0	0	0	0	0	0	0	0	0	0	0
5:15 AM	0	0	0	0	0	0	0	0	0	0	0	0	0	0	0	0	0	0	0	0	0
5:30 AM	0	0	0	0	0	0	0	0	0	0	0	0	0	0	0	0	1	0	0	1	1
5:45 AM	0	0	0	0	0	0	0	0	0	0	0	0	0	0	0	0	0	0	0	0	0
Hourly Total	0	0	0	0	0	0	0	0	0	0	0	0	0	0	0	0	1	0	0	1	1
6:00 AM	0	0	0	0	0	0	1	0	0	1	0	0	0	0	0	0	1	0	0	1	2

6:15 AM	0	0	0	0	0	0	1	0	0	1	0	0	0	0	0	0	1	0	0	1	2
6:30 AM	0	0	0	0	0	0	1	0	0	1	0	0	0	0	0	0	1	0	0	1	2
6:45 AM	0	0	1	0	1	0	2	0	0	2	0	0	0	0	0	0	0	0	0	0	3
Hourly Total	0	0	1	0	1	0	5	0	0	5	0	0	0	0	0	0	3	0	0	3	9
7:00 AM	0	0	1	0	1	0	1	0	0	1	0	0	0	0	0	0	0	1	0	1	3
7:15 AM	0	0	0	0	0	0	2	0	0	2	0	1	0	0	1	0	1	0	0	1	4
7:30 AM	1	1	0	0	2	0	1	0	0	1	0	1	0	0	1	0	0	1	0	1	5
7:45 AM	0	0	4	0	4	0	2	0	0	2	0	1	0	0	1	0	2	0	0	2	9
Hourly Total	1	1	5	0	7	0	6	0	0	6	0	3	0	0	3	0	3	2	0	5	21
8:00 AM	0	0	0	0	0	0	0	0	0	0	0	0	0	0	0	0	0	0	0	0	0
8:15 AM	0	0	0	0	0	0	0	0	0	0	0	0	0	0	0	0	2	0	0	2	2
8:30 AM	0	1	0	0	1	1	0	0	0	1	1	0	0	0	1	0	2	0	0	2	5
8:45 AM	0	1	0	0	1	0	0	0	0	0	0	0	0	0	0	0	1	0	0	1	2
Hourly Total	0	2	0	0	2	1	0	0	0	1	1	0	0	0	1	0	5	0	0	5	9
9:00 AM	0	0	0	0	0	0	1	0	0	1	0	0	0	0	0	0	1	0	0	1	2
9:15 AM	0	0	1	0	1	1	0	0	0	1	0	0	0	0	0	0	0	0	0	0	2
9:30 AM	0	0	0	0	0	1	0	0	0	1	0	0	1	0	1	0	2	0	0	2	4
9:45 AM	2	0	0	0	2	0	1	1	0	2	0	0	0	0	0	0	0	0	0	0	4
Hourly Total	2	0	1	0	3	2	2	1	0	5	0	0	1	0	1	0	3	0	0	3	12
10:00 AM	0	0	0	0	0	0	1	0	0	1	0	1	2	0	3	0	1	0	0	1	5
10:15 AM	0	0	0	0	0	1	1	0	0	2	0	0	0	0	0	0	0	0	0	0	2
10:30 AM	0	3	0	0	3	0	0	0	0	0	0	0	0	0	0	0	2	0	0	2	5
10:45 AM	0	1	1	0	2	0	4	0	0	4	0	0	0	0	0	0	2	0	0	2	8
Hourly Total	0	4	1	0	5	1	6	0	0	7	0	1	2	0	3	0	5	0	0	5	20
11:00 AM	0	0	0	0	0	0	1	0	0	1	0	0	0	0	0	1	1	1	0	3	4
11:15 AM	0	2	1	0	3	0	1	1	0	2	1	1	0	0	2	0	0	0	0	0	7
11:30 AM	0	0	0	0	0	1	3	0	0	4	0	0	0	0	0	0	0	0	0	0	4
11:45 AM	0	0	0	0	0	0	1	0	0	1	0	1	0	0	1	0	0	0	0	0	2
Hourly Total	0	2	1	0	3	1	6	1	0	8	1	2	0	0	3	1	1	1	0	3	17
12:00 PM	0	1	0	0	1	0	0	0	0	0	0	0	0	0	0	0	1	0	0	1	2
12:15 PM	0	2	0	0	2	0	1	0	0	1	0	0	0	0	0	0	2	0	0	2	5
12:30 PM	0	1	1	0	2	0	1	0	0	1	0	0	0	0	0	0	0	0	0	0	3
Grand Total	10	34	31	0	75	17	69	5	0	91	6	21	10	0	37	12	89	4	0	105	308
Approach %	13.3	45.3	41.3	0.0	-	18.7	75.8	5.5	0.0	-	16.2	56.8	27.0	0.0	-	11.4	84.8	3.8	0.0	-	-
Total %	3.2	11.0	10.1	0.0	24.4	5.5	22.4	1.6	0.0	29.5	1.9	6.8	3.2	0.0	12.0	3.9	28.9	1.3	0.0	34.1	-
Lights	8	31	25	0	64	15	60	3	0	78	6	17	10	0	33	12	81	3	0	96	271
% Lights	80.0	91.2	80.6	-	85.3	88.2	87.0	60.0	-	85.7	100.0	81.0	100.0	-	89.2	100.0	91.0	75.0	-	91.4	88.0
Other Vehicles	2	3	6	0	11	2	9	2	0	13	0	4	0	0	4	0	8	1	0	9	37
% Other Vehicles	20.0	8.8	19.4	-	14.7	11.8	13.0	40.0	-	14.3	0.0	19.0	0.0	-	10.8	0.0	9.0	25.0	-	8.6	12.0

Stantec Consulting Ltd.
300 - 1919 Rose St

Regina, Saskatchewan, Canada S4P 3P1
306 781 6400 erin.harms@stantec.com

Count Name: T1 (Floral Rd & Haight Rd)
Site Code:
Start Date: 05-30-2023

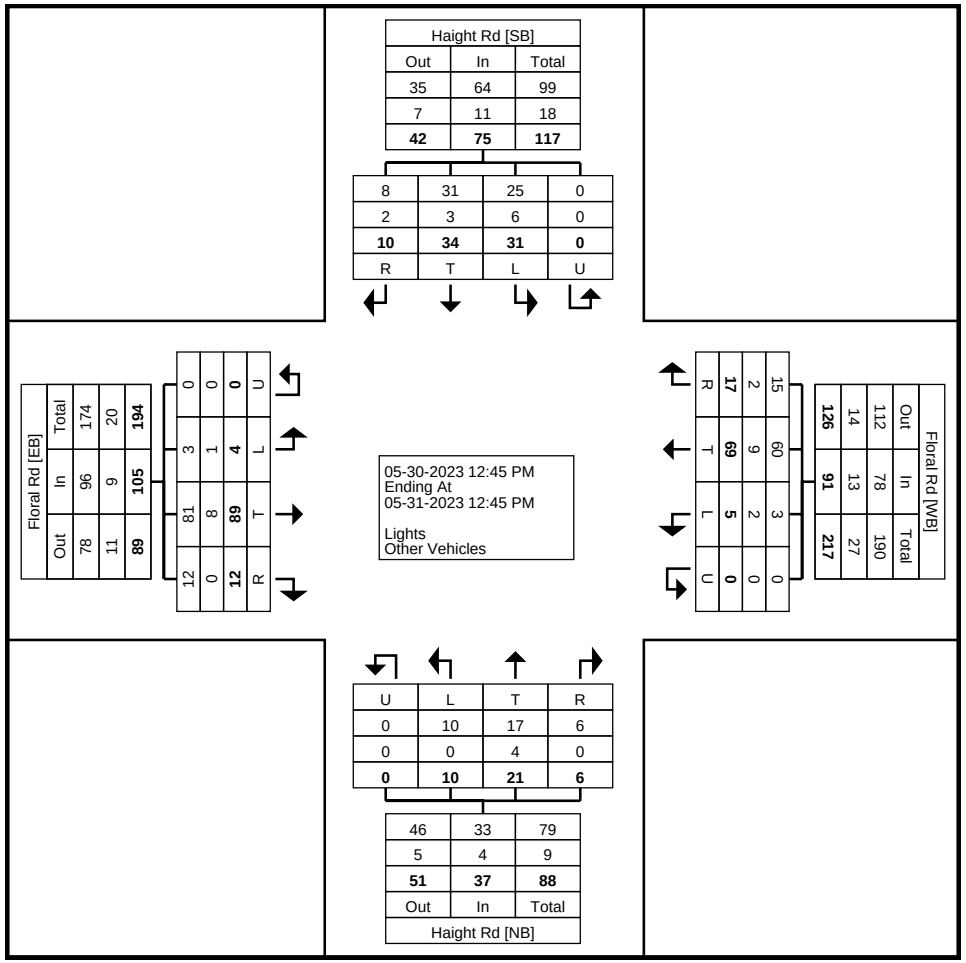

Turning Movement Data Plot

Stantec Consulting Ltd.
300 - 1919 Rose St

Regina, Saskatchewan, Canada S4P 3P1
306 781 6400 erin.harms@stantec.com

Count Name: T1 (Floral Rd & Haight Rd)
Site Code:
Start Date: 05-30-2023

Turning Movement Peak Hour Data (5:15 PM)

Start Time	Haight Rd Southbound					Floral Rd Westbound					Haight Rd Northbound					Floral Rd Eastbound					
	Right	Thru	Left	U-Turn	App. Total	Right	Thru	Left	U-Turn	App. Total	Right	Thru	Left	U-Turn	App. Total	Right	Thru	Left	U-Turn	App. Total	Int. Total
5:15 PM	0	0	0	0	0	0	2	0	0	2	0	0	0	0	0	2	2	0	0	4	6
5:30 PM	0	0	0	0	0	0	2	0	0	2	0	0	1	0	1	1	4	0	0	5	8
5:45 PM	0	0	1	0	1	0	1	0	0	1	0	1	0	0	1	0	2	0	0	2	5
6:00 PM	0	2	0	0	2	0	5	0	0	5	0	0	0	0	0	1	5	0	0	6	13
Total	0	2	1	0	3	0	10	0	0	10	0	1	1	0	2	4	13	0	0	17	32
Approach %	0.0	66.7	33.3	0.0	-	0.0	100.0	0.0	0.0	-	0.0	50.0	50.0	0.0	-	23.5	76.5	0.0	0.0	-	-
Total %	0.0	6.3	3.1	0.0	9.4	0.0	31.3	0.0	0.0	31.3	0.0	3.1	3.1	0.0	6.3	12.5	40.6	0.0	0.0	53.1	-
PHF	0.000	0.250	0.250	0.000	0.375	0.000	0.500	0.000	0.000	0.500	0.000	0.250	0.250	0.000	0.500	0.500	0.650	0.000	0.000	0.708	0.615
Lights	0	2	1	0	3	0	10	0	0	10	0	1	1	0	2	4	13	0	0	17	32
% Lights	-	100.0	100.0	-	100.0	-	100.0	-	-	100.0	-	100.0	100.0	-	100.0	100.0	100.0	-	-	100.0	100.0
Other Vehicles	0	0	0	0	0	0	0	0	0	0	0	0	0	0	0	0	0	0	0	0	0
% Other Vehicles	-	0.0	0.0	-	0.0	-	0.0	-	-	0.0	-	0.0	0.0	-	0.0	0.0	0.0	-	-	0.0	0.0

Stantec Consulting Ltd.
300 - 1919 Rose St

Regina, Saskatchewan, Canada S4P 3P1
306 781 6400 erin.harms@stantec.com

Count Name: T1 (Floral Rd & Haight Rd)
Site Code:
Start Date: 05-30-2023

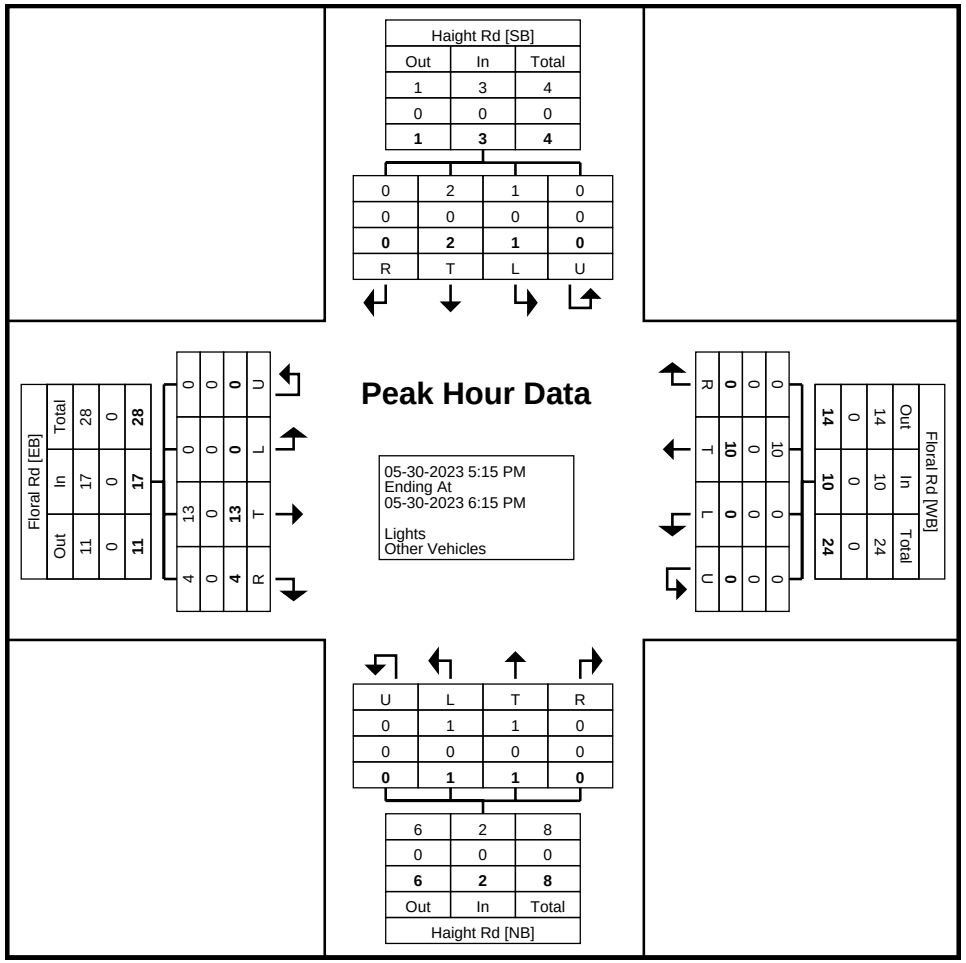

Turning Movement Peak Hour Data Plot (5:15 PM)

Stantec Consulting Ltd.
300 - 1919 Rose St

Regina, Saskatchewan, Canada S4P 3P1
306 781 6400 erin.harms@stantec.com

Count Name: T1 (Floral Rd & Haight Rd)
Site Code:
Start Date: 05-30-2023

Turning Movement Peak Hour Data (10:30 AM)

Start Time	Haight Rd Southbound					Floral Rd Westbound					Haight Rd Northbound					Floral Rd Eastbound					
	Right	Thru	Left	U-Turn	App. Total	Right	Thru	Left	U-Turn	App. Total	Right	Thru	Left	U-Turn	App. Total	Right	Thru	Left	U-Turn	App. Total	Int. Total
10:30 AM	0	3	0	0	3	0	0	0	0	0	0	0	0	0	0	0	2	0	0	2	5
10:45 AM	0	1	1	0	2	0	4	0	0	4	0	0	0	0	0	0	2	0	0	2	8
11:00 AM	0	0	0	0	0	0	1	0	0	1	0	0	0	0	0	1	1	1	0	3	4
11:15 AM	0	2	1	0	3	0	1	1	0	2	1	1	0	0	2	0	0	0	0	0	7
Total	0	6	2	0	8	0	6	1	0	7	1	1	0	0	2	1	5	1	0	7	24
Approach %	0.0	75.0	25.0	0.0	-	0.0	85.7	14.3	0.0	-	50.0	50.0	0.0	0.0	-	14.3	71.4	14.3	0.0	-	-
Total %	0.0	25.0	8.3	0.0	33.3	0.0	25.0	4.2	0.0	29.2	4.2	4.2	0.0	0.0	8.3	4.2	20.8	4.2	0.0	29.2	-
PHF	0.000	0.500	0.500	0.000	0.667	0.000	0.375	0.250	0.000	0.438	0.250	0.250	0.000	0.000	0.250	0.250	0.625	0.250	0.000	0.583	0.750
Lights	0	6	2	0	8	0	3	0	0	3	1	1	0	0	2	1	3	1	0	5	18
% Lights	-	100.0	100.0	-	100.0	-	50.0	0.0	-	42.9	100.0	100.0	-	-	100.0	100.0	60.0	100.0	-	71.4	75.0
Other Vehicles	0	0	0	0	0	0	3	1	0	4	0	0	0	0	0	0	2	0	0	2	6
% Other Vehicles	-	0.0	0.0	-	0.0	-	50.0	100.0	-	57.1	0.0	0.0	-	-	0.0	0.0	40.0	0.0	-	28.6	25.0

Stantec Consulting Ltd.
300 - 1919 Rose St

Regina, Saskatchewan, Canada S4P 3P1
306 781 6400 erin.harms@stantec.com

Count Name: T1 (Floral Rd & Haight Rd)
Site Code:
Start Date: 05-30-2023

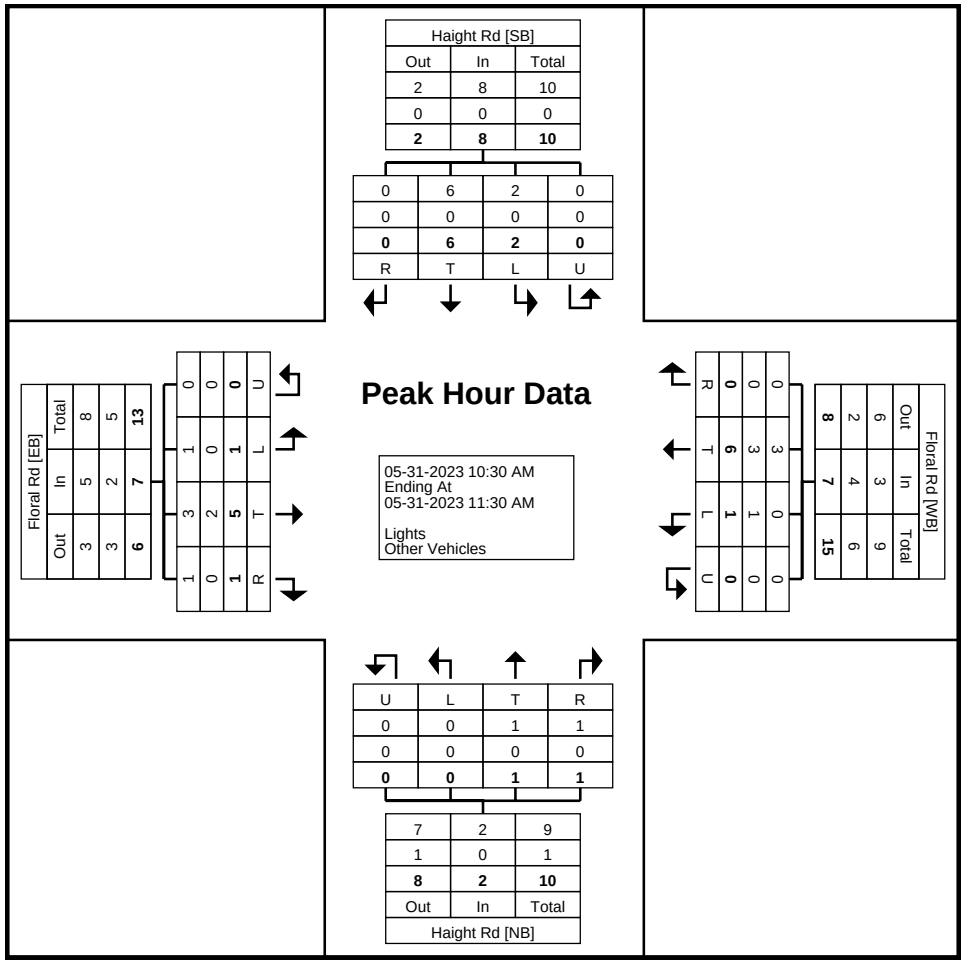

Turning Movement Peak Hour Data Plot (10:30 AM)

Stantec Consulting Ltd.
300 - 1919 Rose St

Regina, Saskatchewan, Canada S4P 3P1
306 781 6400 erin.harms@stantec.com

Count Name: T2 (8 St E & Range Rd 3041)
Site Code:
Start Date: 06-01-2023

Turning Movement Data

Start Time	Range Rd 3041 Southbound					8 St E Westbound					Range Rd 3041 Northbound					8 St E Eastbound					
	Right	Thru	Left	U-Turn	App. Total	Right	Thru	Left	U-Turn	App. Total	Right	Thru	Left	U-Turn	App. Total	Right	Thru	Left	U-Turn	App. Total	Int. Total
3:00 PM	0	0	0	0	0	0	2	0	0	2	0	0	3	0	3	0	5	0	0	5	10
3:15 PM	0	0	0	0	0	0	3	0	0	3	0	0	0	0	0	0	3	0	0	3	6
3:30 PM	0	0	0	0	0	0	1	1	0	2	0	0	0	0	0	0	3	0	0	3	5
3:45 PM	0	0	0	0	0	0	4	1	0	5	1	0	1	0	2	1	4	0	0	5	12
Hourly Total	0	0	0	0	0	0	10	2	0	12	1	0	4	0	5	1	15	0	0	16	33
4:00 PM	0	0	0	0	0	0	5	0	0	5	0	0	0	0	0	0	3	0	0	3	8
4:15 PM	0	0	0	0	0	0	4	0	0	4	0	0	0	0	0	0	4	0	0	4	8
4:30 PM	0	0	0	0	0	0	7	0	0	7	0	0	0	0	0	0	4	0	0	4	11
4:45 PM	0	0	0	0	0	0	3	0	0	3	0	0	0	0	0	0	4	0	0	4	7
Hourly Total	0	0	0	0	0	0	19	0	0	19	0	0	0	0	0	0	15	0	0	15	34
5:00 PM	0	0	0	0	0	0	2	0	0	2	0	0	0	0	0	1	6	0	0	7	9
5:15 PM	0	0	0	0	0	0	5	1	0	6	1	0	0	0	1	0	2	0	0	2	9
5:30 PM	0	0	0	0	0	0	4	0	0	4	0	0	0	0	0	1	8	0	0	9	13
5:45 PM	0	0	0	0	0	0	2	0	0	2	0	0	0	0	0	0	5	0	0	5	7
Hourly Total	0	0	0	0	0	0	13	1	0	14	1	0	0	0	1	2	21	0	0	23	38
6:00 PM	0	0	0	0	0	0	0	0	0	0	0	0	0	0	0	0	0	0	0	0	0
6:15 PM	0	0	0	0	0	0	2	1	0	3	0	0	1	0	1	1	4	0	0	5	9
6:30 PM	0	0	0	0	0	0	1	0	0	1	0	0	0	0	0	1	2	0	0	3	4
6:45 PM	0	0	0	0	0	0	2	0	0	2	0	0	0	0	0	0	3	0	0	3	5
Hourly Total	0	0	0	0	0	0	5	1	0	6	0	0	1	0	1	2	9	0	0	11	18
7:00 PM	0	0	0	0	0	0	1	0	0	1	0	0	0	0	0	0	1	0	0	1	2
7:15 PM	0	0	0	0	0	0	1	0	0	1	0	0	0	0	0	0	1	0	0	1	2
7:30 PM	0	0	0	0	0	0	3	0	0	3	0	0	1	0	1	0	0	0	0	0	4
7:45 PM	0	0	0	0	0	0	0	0	0	0	0	0	1	0	1	0	4	0	0	4	5
Hourly Total	0	0	0	0	0	0	5	0	0	5	0	0	2	0	2	0	6	0	0	6	13
8:00 PM	0	0	0	0	0	0	2	0	0	2	0	0	0	0	0	0	0	0	0	0	2
8:15 PM	0	0	0	0	0	0	1	0	0	1	0	0	0	0	0	0	0	0	0	0	1
8:30 PM	0	0	0	0	0	0	0	0	0	0	0	0	0	0	0	0	2	0	0	2	2
8:45 PM	0	0	0	0	0	0	1	0	0	1	0	0	0	0	0	0	2	0	0	2	3
Hourly Total	0	0	0	0	0	0	4	0	0	4	0	0	0	0	0	0	4	0	0	4	8
9:00 PM	0	0	0	0	0	0	2	0	0	2	0	0	0	0	0	0	2	0	0	2	4
9:15 PM	0	0	0	0	0	0	0	0	0	0	0	0	0	0	0	0	3	0	0	3	3
9:30 PM	0	0	0	0	0	0	0	0	0	0	0	0	0	0	0	1	1	0	0	2	2
9:45 PM	0	0	0	0	0	0	1	0	0	1	0	0	0	0	0	0	1	0	0	1	2
Hourly Total	0	0	0	0	0	0	3	0	0	3	0	0	0	0	0	1	7	0	0	8	11
10:00 PM	0	0	1	0	1	0	1	0	0	1	0	0	0	0	0	0	1	0	0	1	3

10:15 PM	0	0	0	0	0	0	1	0	0	1	0	0	0	0	0	0	0	0	0	0	1
10:30 PM	0	0	0	0	0	0	0	0	0	0	0	0	0	0	0	0	0	0	0	0	0
10:45 PM	0	0	0	0	0	0	0	0	0	0	0	0	0	0	0	0	2	0	0	2	2
Hourly Total	0	0	1	0	1	0	2	0	0	2	0	0	0	0	0	0	3	0	0	3	6
11:00 PM	0	0	0	0	0	0	0	0	0	0	0	0	0	0	0	0	1	0	0	1	1
11:15 PM	0	0	0	0	0	0	0	0	0	0	0	0	0	0	0	0	1	0	0	1	1
11:30 PM	1	0	0	0	1	0	0	0	0	0	0	0	0	0	0	0	0	1	0	1	2
11:45 PM	0	0	0	0	0	0	0	0	0	0	0	0	0	0	0	0	0	0	0	0	0
Hourly Total	1	0	0	0	1	0	0	0	0	0	0	0	0	0	0	0	2	1	0	3	4
12:00 AM	0	0	0	0	0	0	0	0	0	0	0	0	0	0	0	0	0	0	0	0	0
12:15 AM	0	0	0	0	0	0	0	0	0	0	0	0	0	0	0	0	0	0	0	0	0
12:30 AM	0	0	0	0	0	0	0	0	0	0	0	0	0	0	0	0	0	0	0	0	0
12:45 AM	0	0	0	0	0	0	0	0	0	0	0	0	0	0	0	0	0	0	0	0	0
Hourly Total	0	0	0	0	0	0	0	0	0	0	0	0	0	0	0	0	0	0	0	0	0
1:00 AM	0	0	0	0	0	0	0	0	0	0	0	0	0	0	0	0	0	0	0	0	0
1:15 AM	0	0	0	0	0	0	0	0	0	0	0	0	0	0	0	0	0	0	0	0	0
1:30 AM	0	0	0	0	0	0	0	0	0	0	0	0	0	0	0	0	0	0	0	0	0
1:45 AM	0	0	0	0	0	0	0	0	0	0	0	0	0	0	0	0	0	0	0	0	0
Hourly Total	0	0	0	0	0	0	0	0	0	0	0	0	0	0	0	0	0	0	0	0	0
2:00 AM	0	0	0	0	0	0	0	0	0	0	0	0	0	0	0	0	0	0	0	0	0
2:15 AM	0	0	0	0	0	0	0	0	0	0	0	0	0	0	0	0	0	0	0	0	0
2:30 AM	0	0	0	0	0	0	0	0	0	0	0	0	0	0	0	0	0	0	0	0	0
2:45 AM	0	0	0	0	0	0	0	0	0	0	0	0	0	0	0	0	0	0	0	0	0
Hourly Total	0	0	0	0	0	0	0	0	0	0	0	0	0	0	0	0	0	0	0	0	0
3:00 AM	0	0	0	0	0	0	0	0	0	0	0	0	0	0	0	0	0	0	0	0	0
3:15 AM	0	0	0	0	0	0	0	0	0	0	0	0	0	0	0	0	0	0	0	0	0
3:30 AM	0	0	0	0	0	0	0	0	0	0	0	0	0	0	0	0	0	0	0	0	0
3:45 AM	0	0	0	0	0	0	0	0	0	0	0	0	0	0	0	0	0	0	0	0	0
Hourly Total	0	0	0	0	0	0	0	0	0	0	0	0	0	0	0	0	0	0	0	0	0
4:00 AM	0	0	0	0	0	0	0	0	0	0	0	0	0	0	0	0	0	0	0	0	0
4:15 AM	0	0	0	0	0	0	0	0	0	0	0	0	0	0	0	0	0	0	0	0	0
4:30 AM	0	0	0	0	0	0	0	0	0	0	0	0	0	0	0	0	0	0	0	0	0
4:45 AM	0	0	0	0	0	0	0	0	0	0	0	0	0	0	0	0	0	0	0	0	0
Hourly Total	0	0	0	0	0	0	0	0	0	0	0	0	0	0	0	0	0	0	0	0	0
5:00 AM	0	0	0	0	0	0	0	0	0	0	0	0	0	0	0	0	0	0	0	0	0
5:15 AM	0	0	0	0	0	0	0	0	0	0	0	0	0	0	0	0	0	0	0	0	0
5:30 AM	0	0	0	0	0	0	1	0	0	1	0	0	0	0	0	0	2	0	0	2	3
5:45 AM	0	0	0	0	0	0	1	0	0	1	0	0	0	0	0	0	4	0	0	4	5
Hourly Total	0	0	0	0	0	0	2	0	0	2	0	0	0	0	0	0	6	0	0	6	8
6:00 AM	0	0	0	0	0	0	0	0	0	0	0	0	0	0	0	0	0	0	0	0	0
6:15 AM	0	0	0	0	0	0	0	0	0	0	0	0	0	0	0	0	1	0	0	1	1
6:30 AM	0	0	0	0	0	0	3	0	0	3	0	0	0	0	0	0	1	0	0	1	4
6:45 AM	0	0	0	0	0	0	1	0	0	1	0	0	0	0	0	0	1	0	0	1	2
Hourly Total	0	0	0	0	0	0	4	0	0	4	0	0	0	0	0	0	3	0	0	3	7
7:00 AM	0	0	0	0	0	0	2	0	0	2	0	0	0	0	0	0	0	0	0	0	2
7:15 AM	0	0	0	0	0	0	2	0	0	2	1	0	0	0	1	0	6	0	0	6	9
7:30 AM	0	0	0	0	0	0	5	0	0	5	0	0	0	0	0	0	0	0	0	0	5
7:45 AM	0	0	0	0	0	0	7	0	0	7	1	0	2	0	3	1	2	0	0	3	13
Hourly Total	0	0	0	0	0	0	16	0	0	16	2	0	2	0	4	1	8	0	0	9	29
8:00 AM	0	0	0	0	0	0	1	0	0	1	0	0	0	0	0	0	2	0	0	2	3
8:15 AM	0	0	0	0	0	0	8	0	0	8	0	0	0	0	0	0	3	0	0	3	11
8:30 AM	0	0	0	0	0	0	3	0	0	3	0	0	0	0	0	0	1	0	0	1	4

8:45 AM	0	0	0	0	0	0	5	0	0	5	0	0	0	0	0	0	1	0	0	1	6
Hourly Total	0	0	0	0	0	0	17	0	0	17	0	0	0	0	0	0	7	0	0	7	24
9:00 AM	0	0	0	0	0	0	4	0	0	4	0	0	0	0	0	0	1	0	0	1	5
9:15 AM	0	0	0	0	0	0	3	0	0	3	0	0	0	0	0	0	1	0	0	1	4
9:30 AM	0	0	0	0	0	0	3	0	0	3	0	0	0	0	0	0	2	0	0	2	5
9:45 AM	0	0	0	0	0	0	3	0	0	3	0	0	0	0	0	0	1	0	0	1	4
Hourly Total	0	0	0	0	0	0	13	0	0	13	0	0	0	0	0	0	5	0	0	5	18
10:00 AM	0	0	0	0	0	0	3	0	0	3	0	0	0	0	0	0	2	0	0	2	5
10:15 AM	0	0	0	0	0	0	1	0	0	1	0	0	0	0	0	0	1	0	0	1	2
10:30 AM	1	0	0	0	1	0	1	0	0	1	0	0	1	0	1	0	2	0	0	2	5
10:45 AM	0	0	0	0	0	0	1	0	0	1	0	0	0	0	0	0	3	0	0	3	4
Hourly Total	1	0	0	0	1	0	6	0	0	6	0	0	1	0	1	0	8	0	0	8	16
11:00 AM	0	0	0	0	0	0	4	0	0	4	1	0	0	0	1	0	0	0	0	0	5
11:15 AM	0	0	0	0	0	0	3	0	0	3	0	0	0	0	0	0	1	0	0	1	4
11:30 AM	0	0	0	0	0	0	2	0	0	2	0	0	0	0	0	0	6	0	0	6	8
11:45 AM	0	0	0	0	0	0	1	0	0	1	0	0	0	0	0	0	1	0	0	1	2
Hourly Total	0	0	0	0	0	0	10	0	0	10	1	0	0	0	1	0	8	0	0	8	19
12:00 PM	0	0	0	0	0	0	0	0	0	0	0	0	0	0	0	0	1	0	0	1	1
12:15 PM	0	0	0	0	0	0	2	0	0	2	0	0	0	0	0	1	4	0	0	5	7
12:30 PM	0	0	0	0	0	0	0	0	0	0	0	0	0	0	0	0	2	0	0	2	2
12:45 PM	0	0	0	0	0	0	1	0	0	1	0	0	0	0	0	0	0	0	0	0	1
Hourly Total	0	0	0	0	0	0	3	0	0	3	0	0	0	0	0	1	7	0	0	8	11
1:00 PM	0	0	0	0	0	0	4	0	0	4	0	0	0	0	0	0	1	0	0	1	5
1:15 PM	0	0	0	0	0	0	1	0	0	1	0	0	0	0	0	1	0	0	0	1	2
1:30 PM	0	0	0	0	0	0	2	0	0	2	0	0	0	0	0	0	2	0	0	2	4
1:45 PM	0	0	0	0	0	0	0	0	0	0	0	0	0	0	0	0	1	0	0	1	1
Hourly Total	0	0	0	0	0	0	7	0	0	7	0	0	0	0	0	1	4	0	0	5	12
2:00 PM	0	0	0	0	0	0	4	0	0	4	0	0	0	0	0	0	0	0	0	0	4
2:15 PM	0	0	0	0	0	0	6	1	0	7	0	0	0	0	0	0	1	0	0	1	8
2:30 PM	0	0	0	0	0	0	2	0	0	2	0	0	0	0	0	0	3	0	0	3	5
2:45 PM	1	0	0	0	1	0	3	0	0	3	0	0	0	0	0	0	2	0	0	2	6
Hourly Total	1	0	0	0	1	0	15	1	0	16	0	0	0	0	0	0	6	0	0	6	23
Grand Total	3	0	1	0	4	0	154	5	0	159	5	0	10	0	15	9	144	1	0	154	332
Approach %	75.0	0.0	25.0	0.0	-	0.0	96.9	3.1	0.0	-	33.3	0.0	66.7	0.0	-	5.8	93.5	0.6	0.0	-	-
Total %	0.9	0.0	0.3	0.0	1.2	0.0	46.4	1.5	0.0	47.9	1.5	0.0	3.0	0.0	4.5	2.7	43.4	0.3	0.0	46.4	-
Lights	2	0	0	0	2	0	143	4	0	147	4	0	9	0	13	8	135	1	0	144	306
% Lights	66.7	-	0.0	-	50.0	-	92.9	80.0	-	92.5	80.0	-	90.0	-	86.7	88.9	93.8	100.0	-	93.5	92.2
Other Vehicles	1	0	1	0	2	0	11	1	0	12	1	0	1	0	2	1	9	0	0	10	26
% Other Vehicles	33.3	-	100.0	-	50.0	-	7.1	20.0	-	7.5	20.0	-	10.0	-	13.3	11.1	6.3	0.0	-	6.5	7.8

Stantec Consulting Ltd.
300 - 1919 Rose St

Regina, Saskatchewan, Canada S4P 3P1
306 781 6400 erin.harms@stantec.com

Count Name: T2 (8 St E & Range Rd 3041)
Site Code:
Start Date: 06-01-2023
Page No: 4

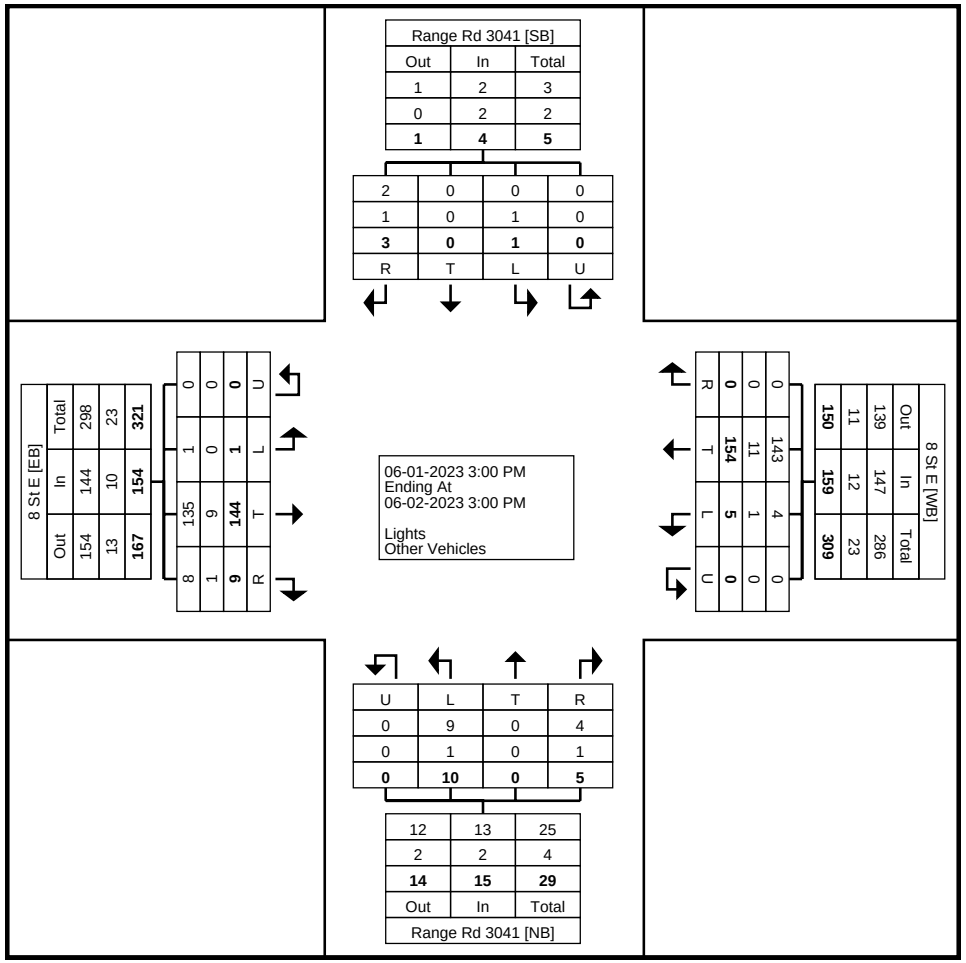

Turning Movement Data Plot

Stantec Consulting Ltd.
300 - 1919 Rose St

Regina, Saskatchewan, Canada S4P 3P1
306 781 6400 erin.harms@stantec.com

Count Name: T2 (8 St E & Range Rd 3041)
Site Code:
Start Date: 06-01-2023

Turning Movement Peak Hour Data (3:45 PM)

Start Time	Range Rd 3041 Southbound					8 St E Westbound					Range Rd 3041 Northbound					8 St E Eastbound					
	Right	Thru	Left	U-Turn	App. Total	Right	Thru	Left	U-Turn	App. Total	Right	Thru	Left	U-Turn	App. Total	Right	Thru	Left	U-Turn	App. Total	Int. Total
3:45 PM	0	0	0	0	0	0	4	1	0	5	1	0	1	0	2	1	4	0	0	5	12
4:00 PM	0	0	0	0	0	0	5	0	0	5	0	0	0	0	0	0	3	0	0	3	8
4:15 PM	0	0	0	0	0	0	4	0	0	4	0	0	0	0	0	0	4	0	0	4	8
4:30 PM	0	0	0	0	0	0	7	0	0	7	0	0	0	0	0	0	4	0	0	4	11
Total	0	0	0	0	0	0	20	1	0	21	1	0	1	0	2	1	15	0	0	16	39
Approach %	0.0	0.0	0.0	0.0	-	0.0	95.2	4.8	0.0	-	50.0	0.0	50.0	0.0	-	6.3	93.8	0.0	0.0	-	-
Total %	0.0	0.0	0.0	0.0	0.0	0.0	51.3	2.6	0.0	53.8	2.6	0.0	2.6	0.0	5.1	2.6	38.5	0.0	0.0	41.0	-
PHF	0.000	0.000	0.000	0.000	0.000	0.000	0.714	0.250	0.000	0.750	0.250	0.000	0.250	0.000	0.250	0.250	0.938	0.000	0.000	0.800	0.813
Lights	0	0	0	0	0	0	19	0	0	19	1	0	0	0	1	1	13	0	0	14	34
% Lights	-	-	-	-	-	-	95.0	0.0	-	90.5	100.0	-	0.0	-	50.0	100.0	86.7	-	-	87.5	87.2
Other Vehicles	0	0	0	0	0	0	1	1	0	2	0	0	1	0	1	0	2	0	0	2	5
% Other Vehicles	-	-	-	-	-	-	5.0	100.0	-	9.5	0.0	-	100.0	-	50.0	0.0	13.3	-	-	12.5	12.8

Stantec Consulting Ltd.
300 - 1919 Rose St

Regina, Saskatchewan, Canada S4P 3P1
306 781 6400 erin.harms@stantec.com

Count Name: T2 (8 St E & Range Rd 3041)
Site Code:
Start Date: 06-01-2023

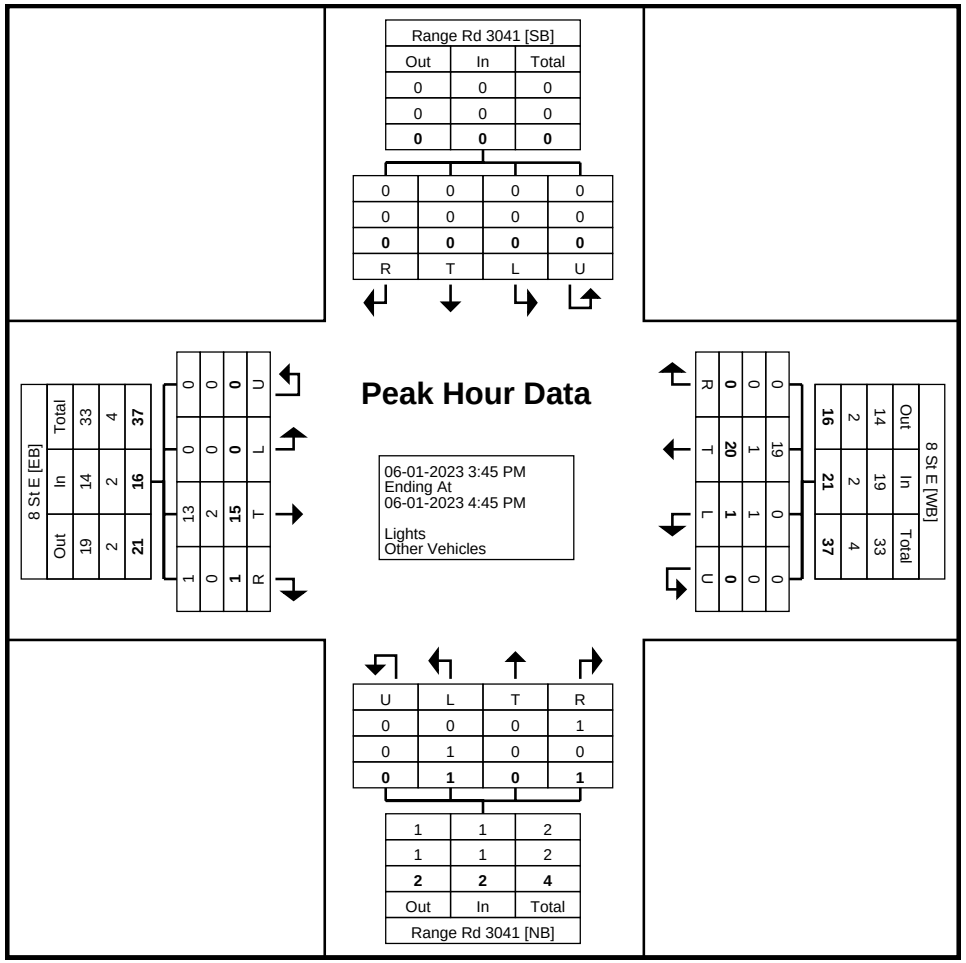

Turning Movement Peak Hour Data Plot (3:45 PM)

Stantec Consulting Ltd.
300 - 1919 Rose St

Regina, Saskatchewan, Canada S4P 3P1
306 781 6400 erin.harms@stantec.com

Count Name: T2 (8 St E & Range Rd 3041)
Site Code:
Start Date: 06-01-2023

Turning Movement Peak Hour Data (7:30 AM)

Start Time	Range Rd 3041 Southbound					8 St E Westbound					Range Rd 3041 Northbound					8 St E Eastbound					
	Right	Thru	Left	U-Turn	App. Total	Right	Thru	Left	U-Turn	App. Total	Right	Thru	Left	U-Turn	App. Total	Right	Thru	Left	U-Turn	App. Total	Int. Total
7:30 AM	0	0	0	0	0	0	5	0	0	5	0	0	0	0	0	0	0	0	0	0	5
7:45 AM	0	0	0	0	0	0	7	0	0	7	1	0	2	0	3	1	2	0	0	3	13
8:00 AM	0	0	0	0	0	0	1	0	0	1	0	0	0	0	0	0	2	0	0	2	3
8:15 AM	0	0	0	0	0	0	8	0	0	8	0	0	0	0	0	0	3	0	0	3	11
Total	0	0	0	0	0	0	21	0	0	21	1	0	2	0	3	1	7	0	0	8	32
Approach %	0.0	0.0	0.0	0.0	-	0.0	100.0	0.0	0.0	-	33.3	0.0	66.7	0.0	-	12.5	87.5	0.0	0.0	-	-
Total %	0.0	0.0	0.0	0.0	0.0	0.0	65.6	0.0	0.0	65.6	3.1	0.0	6.3	0.0	9.4	3.1	21.9	0.0	0.0	25.0	-
PHF	0.000	0.000	0.000	0.000	0.000	0.000	0.656	0.000	0.000	0.656	0.250	0.000	0.250	0.000	0.250	0.250	0.583	0.000	0.000	0.667	0.615
Lights	0	0	0	0	0	0	20	0	0	20	0	0	2	0	2	0	7	0	0	7	29
% Lights	-	-	-	-	-	-	95.2	-	-	95.2	0.0	-	100.0	-	66.7	0.0	100.0	-	-	87.5	90.6
Other Vehicles	0	0	0	0	0	0	1	0	0	1	1	0	0	0	1	1	0	0	0	1	3
% Other Vehicles	-	-	-	-	-	-	4.8	-	-	4.8	100.0	-	0.0	-	33.3	100.0	0.0	-	-	12.5	9.4

Stantec Consulting Ltd.
300 - 1919 Rose St

Regina, Saskatchewan, Canada S4P 3P1
306 781 6400 erin.harms@stantec.com

Count Name: T2 (8 St E & Range Rd 3041)
Site Code:
Start Date: 06-01-2023

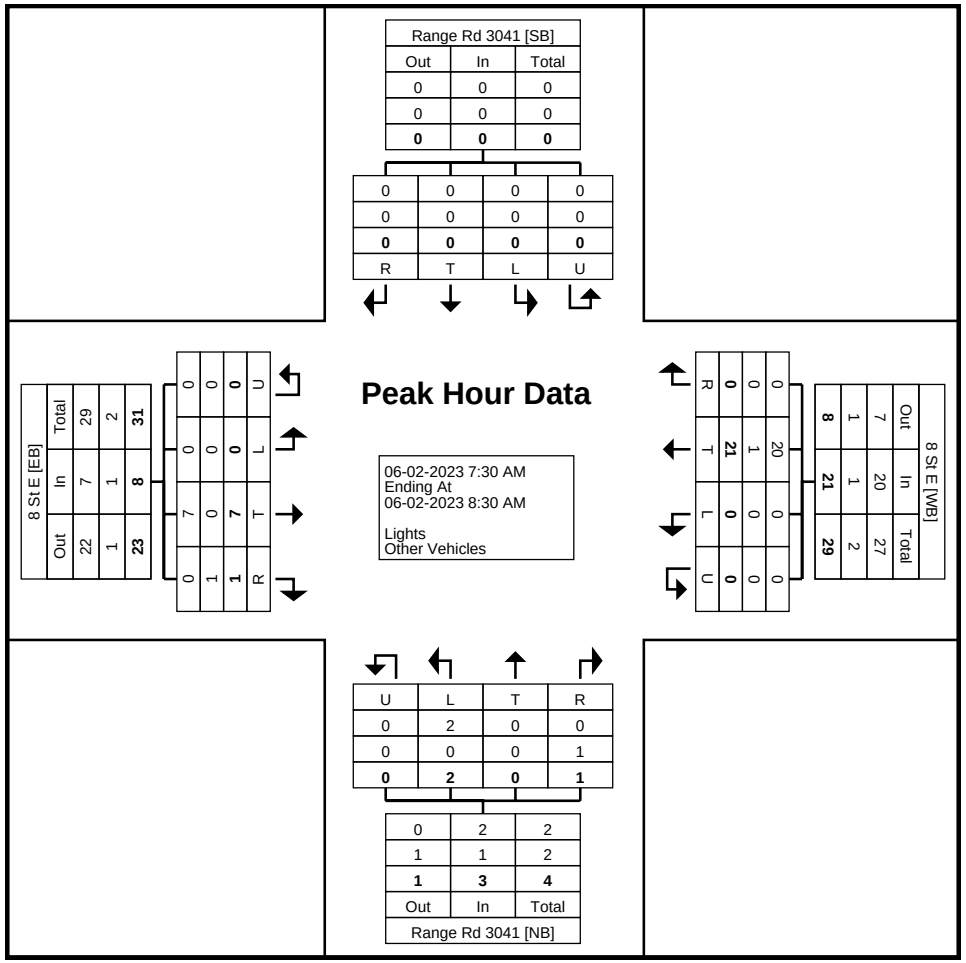

Turning Movement Peak Hour Data Plot (7:30 AM)

Stantec Consulting Ltd.
300 - 1919 Rose St

Regina, Saskatchewan, Canada S4P 3P1
306 781 6400 erin.harms@stantec.com

Count Name: T2 (8 St E & Range Rd 3041)
Site Code:
Start Date: 06-01-2023

Turning Movement Peak Hour Data (2:00 PM)

Start Time	Range Rd 3041 Southbound					8 St E Westbound					Range Rd 3041 Northbound					8 St E Eastbound					
	Right	Thru	Left	U-Turn	App. Total	Right	Thru	Left	U-Turn	App. Total	Right	Thru	Left	U-Turn	App. Total	Right	Thru	Left	U-Turn	App. Total	Int. Total
2:00 PM	0	0	0	0	0	0	4	0	0	4	0	0	0	0	0	0	0	0	0	0	4
2:15 PM	0	0	0	0	0	0	6	1	0	7	0	0	0	0	0	0	1	0	0	1	8
2:30 PM	0	0	0	0	0	0	2	0	0	2	0	0	0	0	0	0	3	0	0	3	5
2:45 PM	1	0	0	0	1	0	3	0	0	3	0	0	0	0	0	0	2	0	0	2	6
Total	1	0	0	0	1	0	15	1	0	16	0	0	0	0	0	0	6	0	0	6	23
Approach %	100.0	0.0	0.0	0.0	-	0.0	93.8	6.3	0.0	-	0.0	0.0	0.0	0.0	-	0.0	100.0	0.0	0.0	-	-
Total %	4.3	0.0	0.0	0.0	4.3	0.0	65.2	4.3	0.0	69.6	0.0	0.0	0.0	0.0	0.0	0.0	26.1	0.0	0.0	26.1	-
PHF	0.250	0.000	0.000	0.000	0.250	0.000	0.625	0.250	0.000	0.571	0.000	0.000	0.000	0.000	0.000	0.000	0.500	0.000	0.000	0.500	0.719
Lights	1	0	0	0	1	0	14	1	0	15	0	0	0	0	0	0	6	0	0	6	22
% Lights	100.0	-	-	-	100.0	-	93.3	100.0	-	93.8	-	-	-	-	-	-	100.0	-	-	100.0	95.7
Other Vehicles	0	0	0	0	0	0	1	0	0	1	0	0	0	0	0	0	0	0	0	0	1
% Other Vehicles	0.0	-	-	-	0.0	-	6.7	0.0	-	6.3	-	-	-	-	-	-	0.0	-	-	0.0	4.3

Stantec Consulting Ltd.
300 - 1919 Rose St

Regina, Saskatchewan, Canada S4P 3P1
306 781 6400 erin.harms@stantec.com

Count Name: T2 (8 St E & Range Rd 3041)
Site Code:
Start Date: 06-01-2023

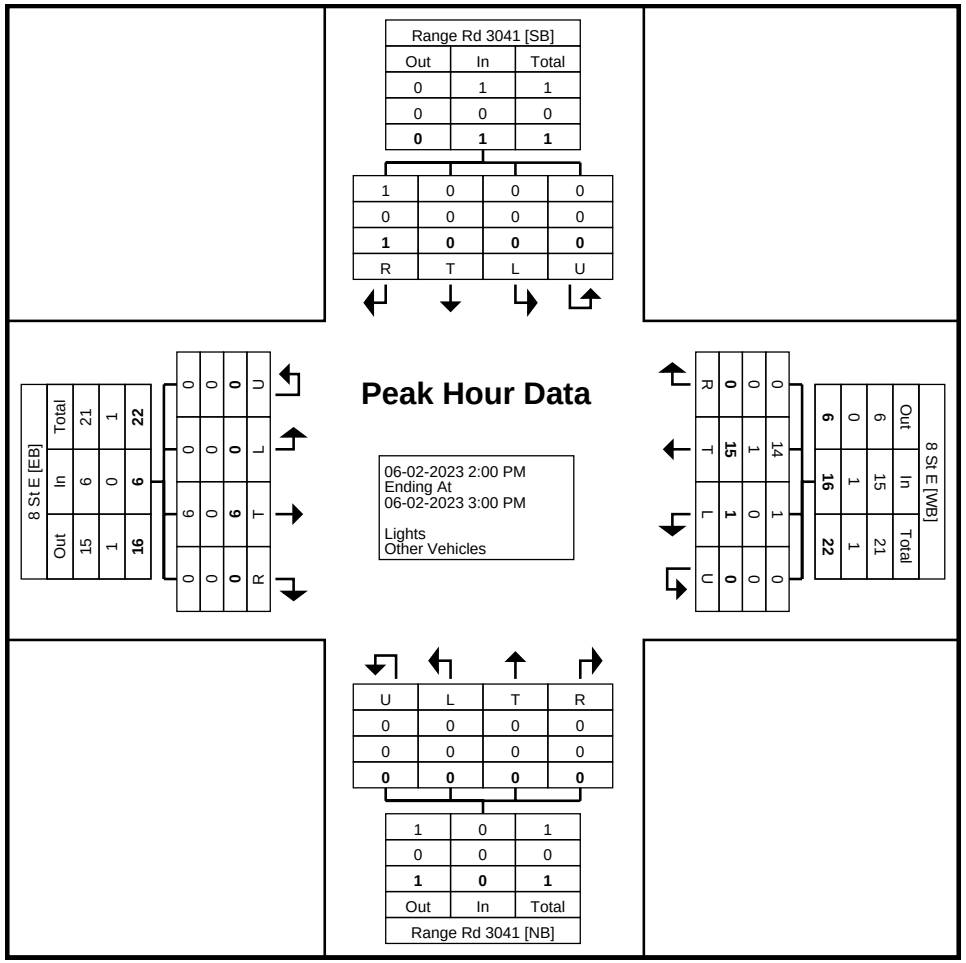

Turning Movement Peak Hour Data Plot (2:00 PM)

Stantec Consulting Ltd.
300 - 1919 Rose St

Regina, Saskatchewan, Canada S4P 3P1
306 781 6400 erin.harms@stantec.com

Count Name: T3 (Hwy 394 & Range Rd 3041)
Site Code:
Start Date: 05-31-2023

Turning Movement Data

Start Time	Range Rd 3041 Southbound					Hwy 394 Westbound					Range Rd 3041 Northbound					Hwy 394 Eastbound					
	Right	Thru	Left	U-Turn	App. Total	Right	Thru	Left	U-Turn	App. Total	Right	Thru	Left	U-Turn	App. Total	Right	Thru	Left	U-Turn	App. Total	Int. Total
1:45 PM	1	0	0	0	1	0	7	0	0	7	0	0	0	0	0	0	7	3	0	10	18
Hourly Total	1	0	0	0	1	0	7	0	0	7	0	0	0	0	0	0	7	3	0	10	18
2:00 PM	8	0	0	0	8	0	7	0	0	7	0	0	0	0	0	0	6	4	0	10	25
2:15 PM	0	0	0	0	0	0	4	0	0	4	0	0	0	0	0	0	4	8	0	12	16
2:30 PM	8	0	0	0	8	0	6	0	0	6	0	0	0	0	0	0	10	0	0	10	24
2:45 PM	5	0	0	0	5	0	9	0	0	9	0	0	0	0	0	0	10	2	0	12	26
Hourly Total	21	0	0	0	21	0	26	0	0	26	0	0	0	0	0	0	30	14	0	44	91
3:00 PM	4	0	0	0	4	0	9	0	0	9	0	0	0	0	0	0	6	2	0	8	21
3:15 PM	2	0	0	0	2	1	6	0	0	7	0	0	0	0	0	0	7	3	0	10	19
3:30 PM	2	0	0	0	2	1	6	0	0	7	0	0	0	0	0	0	13	6	0	19	28
3:45 PM	5	0	0	0	5	0	5	0	0	5	0	0	0	0	0	0	16	10	0	26	36
Hourly Total	13	0	0	0	13	2	26	0	0	28	0	0	0	0	0	0	42	21	0	63	104
4:00 PM	2	0	1	0	3	0	12	0	0	12	0	0	0	0	0	0	13	3	0	16	31
4:15 PM	3	0	1	0	4	1	9	0	0	10	0	0	0	0	0	0	14	2	0	16	30
4:30 PM	1	0	1	0	2	0	13	0	0	13	0	1	0	0	1	0	13	7	0	20	36
4:45 PM	1	1	0	0	2	1	14	0	0	15	0	0	1	0	1	0	17	6	0	23	41
Hourly Total	7	1	3	0	11	2	48	0	0	50	0	1	1	0	2	0	57	18	0	75	138
5:00 PM	2	0	0	0	2	0	19	0	0	19	0	0	0	0	0	0	14	2	0	16	37
5:15 PM	4	0	0	0	4	1	11	0	0	12	0	0	0	0	0	0	12	5	0	17	33
5:30 PM	0	0	0	0	0	1	10	0	0	11	0	0	0	0	0	0	13	1	0	14	25
5:45 PM	5	0	0	0	5	0	9	0	0	9	0	0	0	0	0	0	14	7	0	21	35
Hourly Total	11	0	0	0	11	2	49	0	0	51	0	0	0	0	0	0	53	15	0	68	130
6:00 PM	4	0	0	0	4	0	6	0	0	6	0	0	1	0	1	0	7	4	0	11	22
6:15 PM	3	0	0	0	3	0	11	0	0	11	0	0	0	0	0	0	10	6	0	16	30
6:30 PM	8	0	0	0	8	1	8	0	0	9	0	0	0	0	0	0	13	7	0	20	37
6:45 PM	4	0	1	0	5	0	6	0	0	6	0	0	0	0	0	0	6	3	0	9	20
Hourly Total	19	0	1	0	20	1	31	0	0	32	0	0	1	0	1	0	36	20	0	56	109
7:00 PM	2	0	0	0	2	0	1	0	0	1	0	0	0	0	0	0	7	4	0	11	14
7:15 PM	1	1	0	0	2	0	9	0	0	9	0	1	0	0	1	0	7	2	0	9	21
7:30 PM	0	1	0	0	1	0	3	0	0	3	0	1	0	0	1	0	4	5	0	9	14
7:45 PM	3	0	0	0	3	0	3	0	0	3	0	0	0	0	0	0	12	5	0	17	23
Hourly Total	6	2	0	0	8	0	16	0	0	16	0	2	0	0	2	0	30	16	0	46	72
8:00 PM	1	0	0	0	1	0	1	0	0	1	0	0	0	0	0	0	7	1	0	8	10
8:15 PM	2	0	0	0	2	0	3	0	0	3	0	0	0	0	0	0	12	1	0	13	18
8:30 PM	1	0	0	0	1	1	1	0	0	2	0	0	0	0	0	0	10	3	0	13	16
8:45 PM	0	0	0	0	0	0	0	0	0	0	0	0	0	0	0	0	4	3	0	7	7

Hourly Total	4	0	0	0	4	1	5	0	0	6	0	0	0	0	0	0	33	8	0	41	51
9:00 PM	0	0	0	0	0	0	0	0	0	0	0	0	0	0	0	0	8	6	0	14	14
9:15 PM	1	0	0	0	1	0	0	0	0	0	0	0	0	0	0	0	3	6	0	9	10
9:30 PM	1	0	0	0	1	0	0	0	0	0	0	0	0	0	0	0	2	1	0	3	4
9:45 PM	0	0	0	0	0	0	1	0	0	1	0	0	0	0	0	0	6	1	0	7	8
Hourly Total	2	0	0	0	2	0	1	0	0	1	0	0	0	0	0	0	19	14	0	33	36
10:00 PM	0	0	0	0	0	0	2	0	0	2	0	0	0	0	0	0	4	0	0	4	6
10:15 PM	0	0	0	0	0	0	2	0	1	3	0	0	0	0	0	0	3	0	0	3	6
10:30 PM	0	0	0	0	0	0	0	0	0	0	0	0	0	0	0	0	3	1	0	4	4
10:45 PM	1	0	0	0	1	0	0	0	0	0	0	0	0	0	0	0	2	1	0	3	4
Hourly Total	1	0	0	0	1	0	4	0	1	5	0	0	0	0	0	0	12	2	0	14	20
11:00 PM	0	0	0	0	0	0	0	0	0	0	0	0	0	0	0	0	0	0	0	0	0
11:15 PM	0	0	0	0	0	0	1	0	0	1	0	0	0	0	0	0	1	1	0	2	3
11:30 PM	2	0	0	0	2	0	1	0	0	1	0	0	0	0	0	0	0	0	0	0	3
11:45 PM	0	0	0	0	0	0	0	0	0	0	0	0	0	0	0	0	1	0	0	1	1
Hourly Total	2	0	0	0	2	0	2	0	0	2	0	0	0	0	0	0	2	1	0	3	7
12:00 AM	0	0	0	0	0	0	0	0	0	0	0	0	0	0	0	0	3	0	0	3	3
12:15 AM	0	0	0	0	0	0	0	0	0	0	0	0	0	0	0	0	0	0	0	0	0
12:30 AM	0	0	0	0	0	0	1	0	0	1	0	0	0	0	0	0	0	0	0	0	1
12:45 AM	0	0	0	0	0	0	0	0	0	0	0	0	0	0	0	0	0	1	0	1	1
Hourly Total	0	0	0	0	0	0	1	0	0	1	0	0	0	0	0	0	3	1	0	4	5
1:00 AM	0	0	0	0	0	0	0	0	0	0	0	0	0	0	0	0	0	0	0	0	0
1:15 AM	0	0	0	0	0	0	1	0	0	1	0	0	0	0	0	0	0	0	0	0	1
1:30 AM	0	0	0	0	0	0	0	0	0	0	0	0	0	0	0	0	0	0	0	0	0
1:45 AM	0	0	0	0	0	0	0	0	0	0	0	0	0	0	0	0	0	0	0	0	0
Hourly Total	0	0	0	0	0	0	1	0	0	1	0	0	0	0	0	0	0	0	0	0	1
2:00 AM	0	0	0	0	0	0	0	0	0	0	0	0	0	0	0	0	0	0	0	0	0
2:15 AM	0	0	0	0	0	0	0	0	0	0	0	0	0	0	0	0	0	0	0	0	0
2:30 AM	0	0	0	0	0	0	0	0	0	0	0	0	0	0	0	0	0	0	0	0	0
2:45 AM	0	0	0	0	0	0	0	0	0	0	0	0	0	0	0	0	0	0	0	0	0
Hourly Total	0	0	0	0	0	0	0	0	0	0	0	0	0	0	0	0	0	0	0	0	0
3:00 AM	0	0	0	0	0	0	0	0	0	0	0	0	0	0	0	0	0	0	0	0	0
3:15 AM	0	0	0	0	0	0	0	0	0	0	0	0	0	0	0	0	0	0	0	0	0
3:30 AM	0	0	0	0	0	0	0	0	0	0	0	0	0	0	0	0	0	0	0	0	0
3:45 AM	0	0	0	0	0	0	1	0	0	1	0	0	0	0	0	0	0	0	0	0	1
Hourly Total	0	0	0	0	0	0	1	0	0	1	0	0	0	0	0	0	0	0	0	0	1
4:00 AM	0	0	0	0	0	0	1	0	0	1	0	0	0	0	0	0	0	0	0	0	1
4:15 AM	0	0	0	0	0	0	1	0	0	1	0	0	0	0	0	0	0	0	0	0	1
4:30 AM	0	0	0	0	0	0	0	0	0	0	0	0	0	0	0	0	0	0	0	0	0
4:45 AM	0	0	0	0	0	0	0	0	0	0	0	0	0	0	0	0	0	0	0	0	0
Hourly Total	0	0	0	0	0	0	2	0	0	2	0	0	0	0	0	0	0	0	0	0	2
5:00 AM	1	0	0	0	1	0	0	0	0	0	0	0	0	0	0	0	0	0	0	0	1
5:15 AM	0	0	0	0	0	0	2	0	0	2	0	0	0	0	0	0	2	0	0	2	4
5:30 AM	2	0	0	0	2	0	3	0	0	3	0	0	0	0	0	0	1	0	0	1	6
5:45 AM	3	0	0	0	3	0	3	0	0	3	0	0	0	0	0	0	4	0	0	4	10
Hourly Total	6	0	0	0	6	0	8	0	0	8	0	0	0	0	0	0	7	0	0	7	21
6:00 AM	2	0	0	0	2	0	3	0	0	3	0	0	0	0	0	0	7	0	0	7	12
6:15 AM	0	0	0	0	0	0	7	0	0	7	0	0	0	0	0	0	4	1	0	5	12
6:30 AM	4	0	0	0	4	0	5	0	0	5	0	0	0	0	0	0	8	0	0	8	17
6:45 AM	3	0	0	0	3	0	5	0	0	5	0	0	0	0	0	0	11	0	0	11	19
Hourly Total	9	0	0	0	9	0	20	0	0	20	0	0	0	0	0	0	30	1	0	31	60
7:00 AM	5	0	1	0	6	0	7	0	0	7	0	0	0	0	0	0	5	1	0	6	19

7:15 AM	1	0	0	0	1	1	18	0	0	19	0	0	0	0	0	0	5	1	0	6	26
7:30 AM	10	0	1	0	11	0	14	0	0	14	0	0	0	0	0	0	3	1	0	4	29
7:45 AM	3	0	0	0	3	0	12	0	0	12	0	0	0	0	0	1	3	1	0	5	20
Hourly Total	19	0	2	0	21	1	51	0	0	52	0	0	0	0	0	1	16	4	0	21	94
8:00 AM	9	0	1	0	10	1	18	0	0	19	0	1	0	0	1	0	4	4	0	8	38
8:15 AM	6	0	0	0	6	1	20	0	0	21	0	0	0	0	0	0	6	4	0	10	37
8:30 AM	7	0	0	0	7	1	20	0	0	21	0	0	0	0	0	0	1	3	0	4	32
8:45 AM	6	0	1	0	7	0	16	0	0	16	0	0	0	0	0	0	6	4	0	10	33
Hourly Total	28	0	2	0	30	3	74	0	0	77	0	1	0	0	1	0	17	15	0	32	140
9:00 AM	5	0	0	0	5	1	13	0	0	14	0	0	0	0	0	0	5	6	0	11	30
9:15 AM	2	0	0	0	2	0	11	0	0	11	0	0	0	0	0	0	3	2	0	5	18
9:30 AM	2	0	1	0	3	1	6	0	0	7	0	0	1	0	1	1	3	1	0	5	16
9:45 AM	3	0	1	0	4	0	6	0	0	6	0	0	0	0	0	0	6	1	0	7	17
Hourly Total	12	0	2	0	14	2	36	0	0	38	0	0	1	0	1	1	17	10	0	28	81
10:00 AM	5	0	1	0	6	0	12	0	0	12	0	0	0	0	0	0	6	4	0	10	28
10:15 AM	2	0	1	0	3	1	6	0	0	7	0	0	0	0	0	0	5	3	0	8	18
10:30 AM	4	0	2	0	6	0	9	0	0	9	0	0	0	0	0	0	7	4	0	11	26
10:45 AM	5	0	0	0	5	0	9	0	0	9	0	0	0	0	0	0	4	3	0	7	21
Hourly Total	16	0	4	0	20	1	36	0	0	37	0	0	0	0	0	0	22	14	0	36	93
11:00 AM	2	0	0	0	2	0	7	0	0	7	0	0	0	0	0	0	3	4	0	7	16
11:15 AM	0	0	0	0	0	0	6	0	0	6	0	0	0	0	0	0	8	4	0	12	18
11:30 AM	7	0	1	0	8	0	9	0	0	9	0	0	0	0	0	0	7	2	0	9	26
11:45 AM	3	0	0	0	3	0	8	0	0	8	0	0	0	0	0	0	6	5	0	11	22
Hourly Total	12	0	1	0	13	0	30	0	0	30	0	0	0	0	0	0	24	15	0	39	82
12:00 PM	3	0	1	0	4	0	7	0	0	7	0	0	0	0	0	0	6	4	0	10	21
12:15 PM	3	0	0	0	3	0	4	0	0	4	0	0	0	0	0	0	3	3	0	6	13
12:30 PM	3	0	1	0	4	1	2	0	0	3	0	0	0	0	0	0	7	4	0	11	18
12:45 PM	2	0	1	0	3	0	6	0	0	6	0	0	0	0	0	0	7	3	0	10	19
Hourly Total	11	0	3	0	14	1	19	0	0	20	0	0	0	0	0	0	23	14	0	37	71
1:00 PM	3	0	1	0	4	3	7	0	0	10	0	0	0	0	0	0	11	1	0	12	26
1:15 PM	2	0	3	0	5	1	5	0	0	6	0	0	0	0	0	0	3	3	0	6	17
1:30 PM	6	0	0	0	6	0	8	0	0	8	0	0	0	0	0	0	4	4	0	8	22
Grand Total	211	3	22	0	236	20	514	0	1	535	0	4	3	0	7	2	498	214	0	714	1492
Approach %	89.4	1.3	9.3	0.0	-	3.7	96.1	0.0	0.2	-	0.0	57.1	42.9	0.0	-	0.3	69.7	30.0	0.0	-	-
Total %	14.1	0.2	1.5	0.0	15.8	1.3	34.5	0.0	0.1	35.9	0.0	0.3	0.2	0.0	0.5	0.1	33.4	14.3	0.0	47.9	-
Lights	209	3	21	0	233	19	488	0	1	508	0	4	3	0	7	2	472	212	0	686	1434
% Lights	99.1	100.0	95.5	-	98.7	95.0	94.9	-	100.0	95.0	-	100.0	100.0	-	100.0	100.0	94.8	99.1	-	96.1	96.1
Other Vehicles	2	0	1	0	3	1	26	0	0	27	0	0	0	0	0	0	26	2	0	28	58
% Other Vehicles	0.9	0.0	4.5	-	1.3	5.0	5.1	-	0.0	5.0	-	0.0	0.0	-	0.0	0.0	5.2	0.9	-	3.9	3.9

Stantec Consulting Ltd.
300 - 1919 Rose St

Regina, Saskatchewan, Canada S4P 3P1
306 781 6400 erin.harms@stantec.com

Count Name: T3 (Hwy 394 & Range Rd 3041)
Site Code:
Start Date: 05-31-2023
Page No: 4

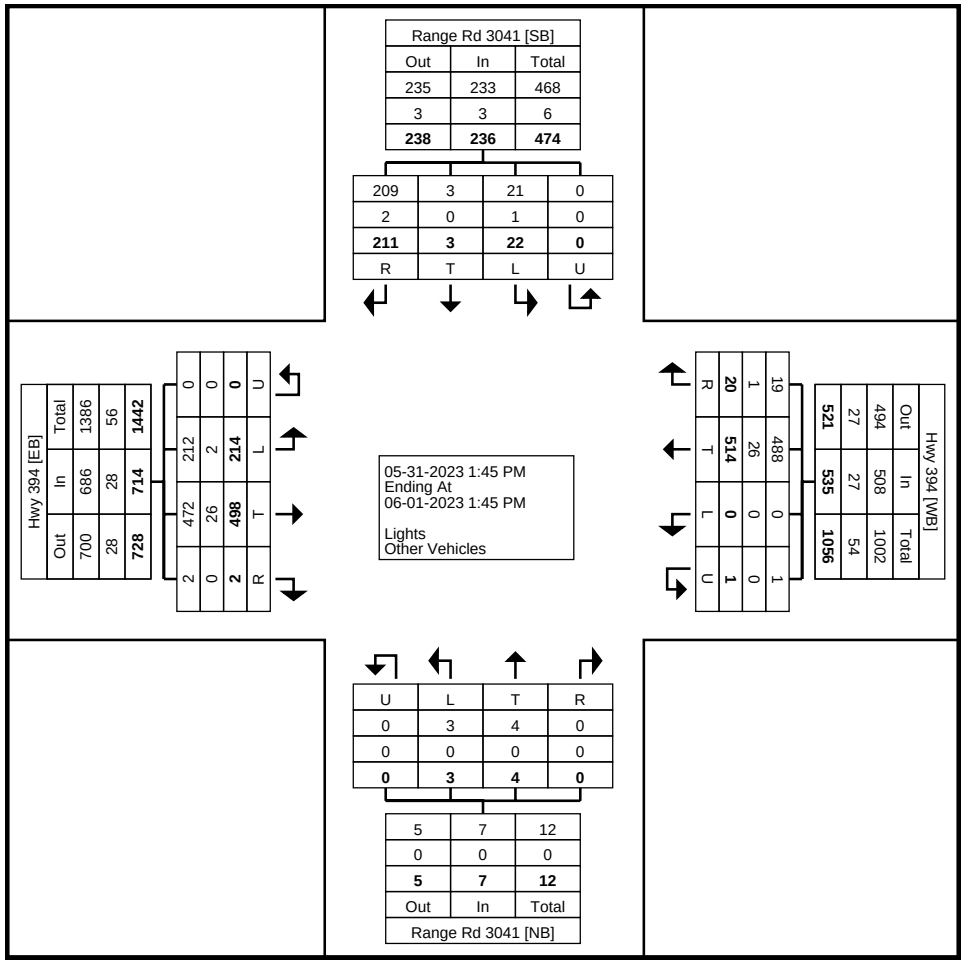

Turning Movement Data Plot

Stantec Consulting Ltd.
300 - 1919 Rose St

Regina, Saskatchewan, Canada S4P 3P1
306 781 6400 erin.harms@stantec.com

Count Name: T3 (Hwy 394 & Range Rd 3041)
Site Code:
Start Date: 05-31-2023

Turning Movement Peak Hour Data (4:30 PM)

Start Time	Range Rd 3041 Southbound					Hwy 394 Westbound					Range Rd 3041 Northbound					Hwy 394 Eastbound					
	Right	Thru	Left	U-Turn	App. Total	Right	Thru	Left	U-Turn	App. Total	Right	Thru	Left	U-Turn	App. Total	Right	Thru	Left	U-Turn	App. Total	Int. Total
4:30 PM	1	0	1	0	2	0	13	0	0	13	0	1	0	0	1	0	13	7	0	20	36
4:45 PM	1	1	0	0	2	1	14	0	0	15	0	0	1	0	1	0	17	6	0	23	41
5:00 PM	2	0	0	0	2	0	19	0	0	19	0	0	0	0	0	0	14	2	0	16	37
5:15 PM	4	0	0	0	4	1	11	0	0	12	0	0	0	0	0	0	12	5	0	17	33
Total	8	1	1	0	10	2	57	0	0	59	0	1	1	0	2	0	56	20	0	76	147
Approach %	80.0	10.0	10.0	0.0	-	3.4	96.6	0.0	0.0	-	0.0	50.0	50.0	0.0	-	0.0	73.7	26.3	0.0	-	-
Total %	5.4	0.7	0.7	0.0	6.8	1.4	38.8	0.0	0.0	40.1	0.0	0.7	0.7	0.0	1.4	0.0	38.1	13.6	0.0	51.7	-
PHF	0.500	0.250	0.250	0.000	0.625	0.500	0.750	0.000	0.000	0.776	0.000	0.250	0.250	0.000	0.500	0.000	0.824	0.714	0.000	0.826	0.896
Lights	8	1	1	0	10	2	55	0	0	57	0	1	1	0	2	0	53	20	0	73	142
% Lights	100.0	100.0	100.0	-	100.0	100.0	96.5	-	-	96.6	-	100.0	100.0	-	100.0	-	94.6	100.0	-	96.1	96.6
Other Vehicles	0	0	0	0	0	0	2	0	0	2	0	0	0	0	0	0	3	0	0	3	5
% Other Vehicles	0.0	0.0	0.0	-	0.0	0.0	3.5	-	-	3.4	-	0.0	0.0	-	0.0	-	5.4	0.0	-	3.9	3.4

Stantec Consulting Ltd.
300 - 1919 Rose St

Regina, Saskatchewan, Canada S4P 3P1
306 781 6400 erin.harms@stantec.com

Count Name: T3 (Hwy 394 & Range Rd 3041)
Site Code:
Start Date: 05-31-2023

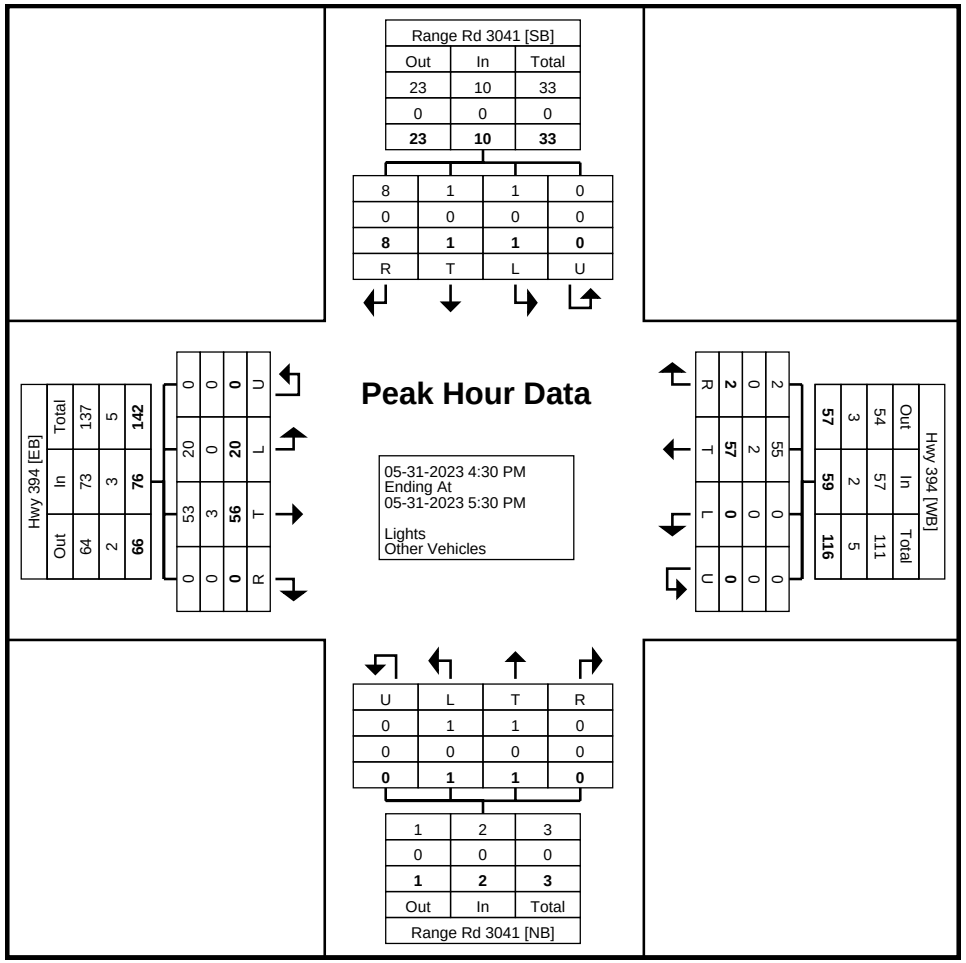

Turning Movement Peak Hour Data Plot (4:30 PM)

Stantec Consulting Ltd.
300 - 1919 Rose St

Regina, Saskatchewan, Canada S4P 3P1
306 781 6400 erin.harms@stantec.com

Count Name: T3 (Hwy 394 & Range Rd 3041)
Site Code:
Start Date: 05-31-2023

Turning Movement Peak Hour Data (8:00 AM)

Start Time	Range Rd 3041 Southbound					Hwy 394 Westbound					Range Rd 3041 Northbound					Hwy 394 Eastbound					
	Right	Thru	Left	U-Turn	App. Total	Right	Thru	Left	U-Turn	App. Total	Right	Thru	Left	U-Turn	App. Total	Right	Thru	Left	U-Turn	App. Total	Int. Total
8:00 AM	9	0	1	0	10	1	18	0	0	19	0	1	0	0	1	0	4	4	0	8	38
8:15 AM	6	0	0	0	6	1	20	0	0	21	0	0	0	0	0	0	6	4	0	10	37
8:30 AM	7	0	0	0	7	1	20	0	0	21	0	0	0	0	0	0	1	3	0	4	32
8:45 AM	6	0	1	0	7	0	16	0	0	16	0	0	0	0	0	0	6	4	0	10	33
Total	28	0	2	0	30	3	74	0	0	77	0	1	0	0	1	0	17	15	0	32	140
Approach %	93.3	0.0	6.7	0.0	-	3.9	96.1	0.0	0.0	-	0.0	100.0	0.0	0.0	-	0.0	53.1	46.9	0.0	-	-
Total %	20.0	0.0	1.4	0.0	21.4	2.1	52.9	0.0	0.0	55.0	0.0	0.7	0.0	0.0	0.7	0.0	12.1	10.7	0.0	22.9	-
PHF	0.778	0.000	0.500	0.000	0.750	0.750	0.925	0.000	0.000	0.917	0.000	0.250	0.000	0.000	0.250	0.000	0.708	0.938	0.000	0.800	0.921
Lights	28	0	1	0	29	3	71	0	0	74	0	1	0	0	1	0	15	14	0	29	133
% Lights	100.0	-	50.0	-	96.7	100.0	95.9	-	-	96.1	-	100.0	-	-	100.0	-	88.2	93.3	-	90.6	95.0
Other Vehicles	0	0	1	0	1	0	3	0	0	3	0	0	0	0	0	0	2	1	0	3	7
% Other Vehicles	0.0	-	50.0	-	3.3	0.0	4.1	-	-	3.9	-	0.0	-	-	0.0	-	11.8	6.7	-	9.4	5.0

Stantec Consulting Ltd.
300 - 1919 Rose St

Regina, Saskatchewan, Canada S4P 3P1
306 781 6400 erin.harms@stantec.com

Count Name: T3 (Hwy 394 & Range Rd 3041)
Site Code:
Start Date: 05-31-2023

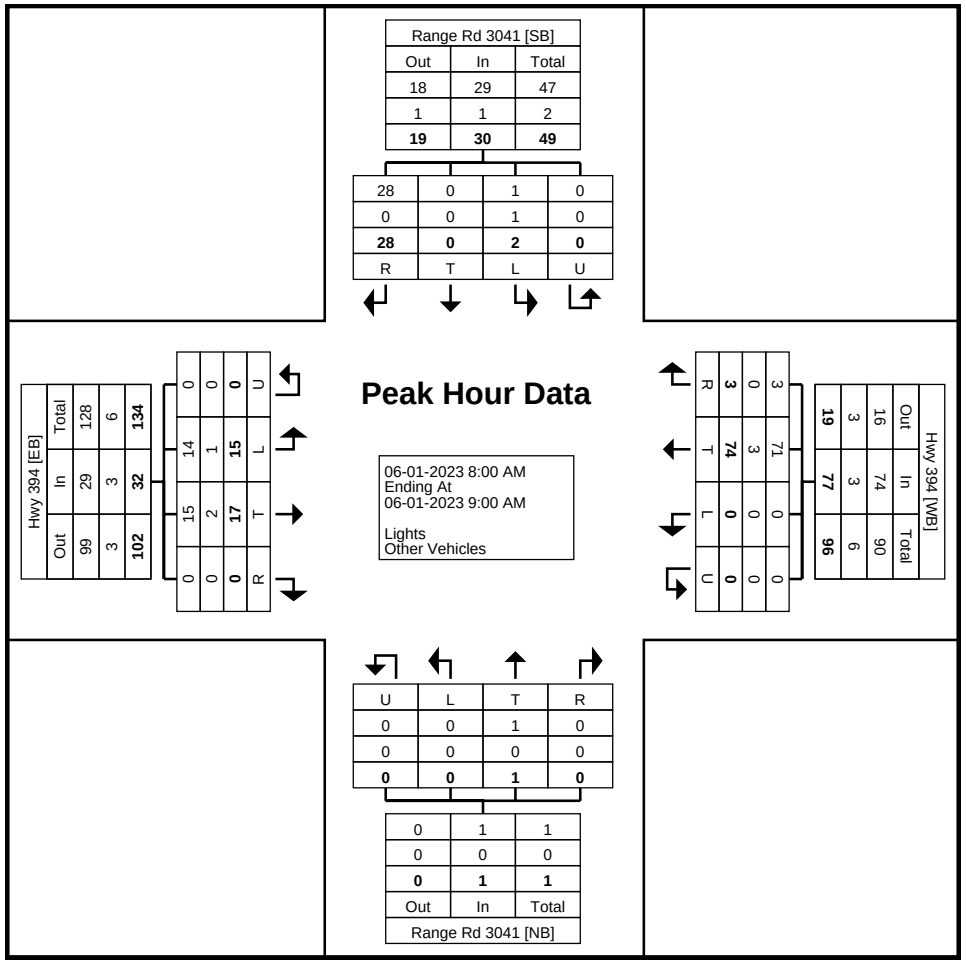

Turning Movement Peak Hour Data Plot (8:00 AM)

Stantec Consulting Ltd.
300 - 1919 Rose St

Regina, Saskatchewan, Canada S4P 3P1
306 781 6400 erin.harms@stantec.com

Count Name: T3 (Hwy 394 & Range Rd 3041)
Site Code:
Start Date: 05-31-2023

Turning Movement Peak Hour Data (12:45 PM)

Start Time	Range Rd 3041 Southbound					Hwy 394 Westbound					Range Rd 3041 Northbound					Hwy 394 Eastbound					
	Right	Thru	Left	U-Turn	App. Total	Right	Thru	Left	U-Turn	App. Total	Right	Thru	Left	U-Turn	App. Total	Right	Thru	Left	U-Turn	App. Total	Int. Total
12:45 PM	2	0	1	0	3	0	6	0	0	6	0	0	0	0	0	0	7	3	0	10	19
1:00 PM	3	0	1	0	4	3	7	0	0	10	0	0	0	0	0	0	11	1	0	12	26
1:15 PM	2	0	3	0	5	1	5	0	0	6	0	0	0	0	0	0	3	3	0	6	17
1:30 PM	6	0	0	0	6	0	8	0	0	8	0	0	0	0	0	0	4	4	0	8	22
Total	13	0	5	0	18	4	26	0	0	30	0	0	0	0	0	0	25	11	0	36	84
Approach %	72.2	0.0	27.8	0.0	-	13.3	86.7	0.0	0.0	-	0.0	0.0	0.0	0.0	-	0.0	69.4	30.6	0.0	-	-
Total %	15.5	0.0	6.0	0.0	21.4	4.8	31.0	0.0	0.0	35.7	0.0	0.0	0.0	0.0	0.0	0.0	29.8	13.1	0.0	42.9	-
PHF	0.542	0.000	0.417	0.000	0.750	0.333	0.813	0.000	0.000	0.750	0.000	0.000	0.000	0.000	0.000	0.000	0.568	0.688	0.000	0.750	0.808
Lights	13	0	5	0	18	4	22	0	0	26	0	0	0	0	0	0	23	11	0	34	78
% Lights	100.0	-	100.0	-	100.0	100.0	84.6	-	-	86.7	-	-	-	-	-	-	92.0	100.0	-	94.4	92.9
Other Vehicles	0	0	0	0	0	0	4	0	0	4	0	0	0	0	0	0	2	0	0	2	6
% Other Vehicles	0.0	-	0.0	-	0.0	0.0	15.4	-	-	13.3	-	-	-	-	-	-	8.0	0.0	-	5.6	7.1

Stantec Consulting Ltd.
300 - 1919 Rose St

Regina, Saskatchewan, Canada S4P 3P1
306 781 6400 erin.harms@stantec.com

Count Name: T3 (Hwy 394 & Range Rd 3041)
Site Code:
Start Date: 05-31-2023

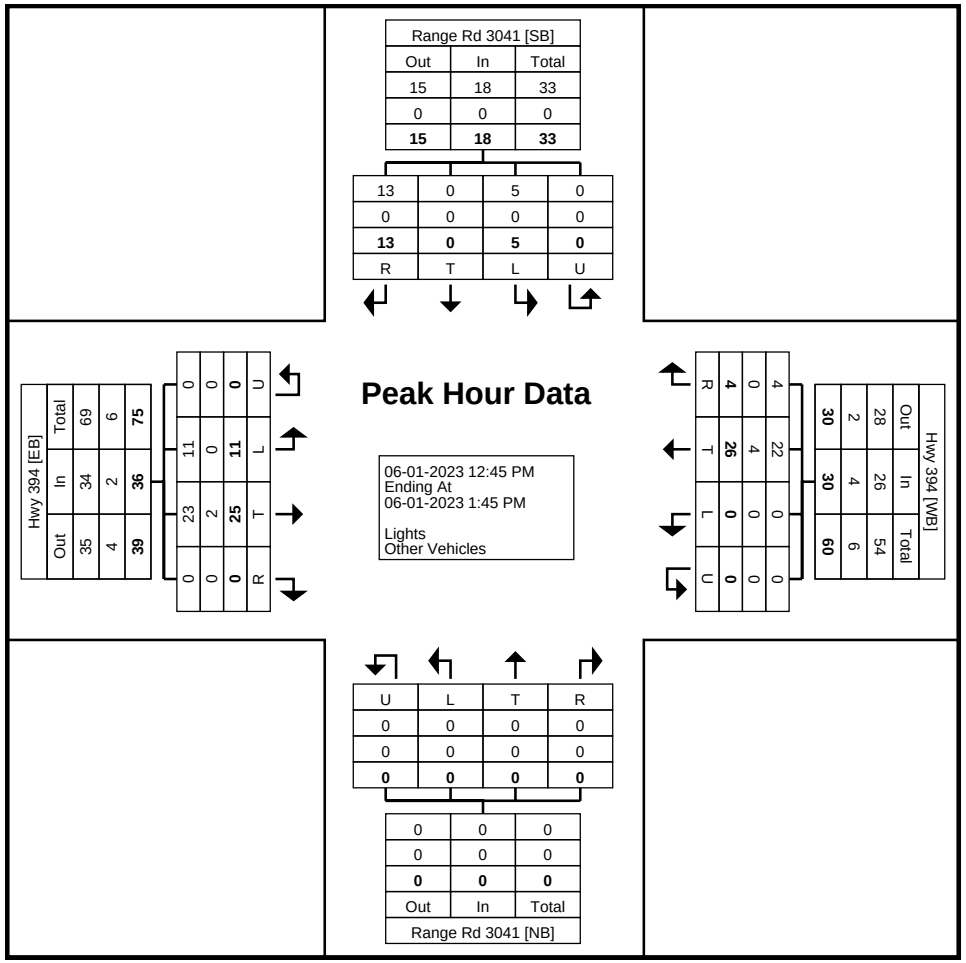

Turning Movement Peak Hour Data Plot (12:45 PM)

Stantec Consulting Ltd.
300 - 1919 Rose St

Regina, Saskatchewan, Canada S4P 3P1
306 781 6400 erin.harms@stantec.com

Count Name: T4-1 (Floral Rd & Freeborn Rd)
Site Code:
Start Date: 05-31-2023

Turning Movement Data

Start Time	Freeborn Rd Southbound				Floral Rd Westbound				Floral Rd Eastbound				
	Right	Left	U-Turn	App. Total	Right	Thru	U-Turn	App. Total	Thru	Left	U-Turn	App. Total	Int. Total
1:00 PM	2	0	0	2	0	6	0	6	8	0	0	8	16
1:15 PM	1	0	0	1	1	6	0	7	9	1	0	10	18
1:30 PM	0	1	0	1	0	6	0	6	10	0	0	10	17
1:45 PM	1	0	0	1	1	6	0	7	6	0	0	6	14
Hourly Total	4	1	0	5	2	24	0	26	33	1	0	34	65
2:00 PM	0	1	0	1	0	7	0	7	1	2	0	3	11
2:15 PM	0	0	0	0	1	11	0	12	9	0	0	9	21
2:30 PM	0	1	0	1	0	10	0	10	6	0	0	6	17
2:45 PM	1	0	0	1	1	6	0	7	5	1	0	6	14
Hourly Total	1	2	0	3	2	34	0	36	21	3	0	24	63
3:00 PM	0	1	0	1	0	11	0	11	8	1	0	9	21
3:15 PM	4	0	0	4	1	12	0	13	2	1	0	3	20
3:30 PM	0	0	0	0	1	9	0	10	4	0	0	4	14
3:45 PM	0	0	0	0	0	9	0	9	4	0	0	4	13
Hourly Total	4	1	0	5	2	41	0	43	18	2	0	20	68
4:00 PM	1	0	0	1	0	13	0	13	5	0	0	5	19
4:15 PM	0	1	0	1	0	6	0	6	6	0	0	6	13
4:30 PM	1	0	0	1	0	13	0	13	6	0	0	6	20
4:45 PM	0	1	0	1	0	12	0	12	5	1	0	6	19
Hourly Total	2	2	0	4	0	44	0	44	22	1	0	23	71
Grand Total	11	6	0	17	6	143	0	149	94	7	0	101	267
Approach %	64.7	35.3	0.0	-	4.0	96.0	0.0	-	93.1	6.9	0.0	-	-
Total %	4.1	2.2	0.0	6.4	2.2	53.6	0.0	55.8	35.2	2.6	0.0	37.8	-
Lights	6	2	0	8	2	107	0	109	57	5	0	62	179
% Lights	54.5	33.3	-	47.1	33.3	74.8	-	73.2	60.6	71.4	-	61.4	67.0
Other Vehicles	5	4	0	9	4	36	0	40	37	2	0	39	88
% Other Vehicles	45.5	66.7	-	52.9	66.7	25.2	-	26.8	39.4	28.6	-	38.6	33.0

Stantec Consulting Ltd.
300 - 1919 Rose St

Regina, Saskatchewan, Canada S4P 3P1
306 781 6400 erin.harms@stantec.com

Count Name: T4-1 (Floral Rd & Freeborn Rd)
Site Code:
Start Date: 05-31-2023

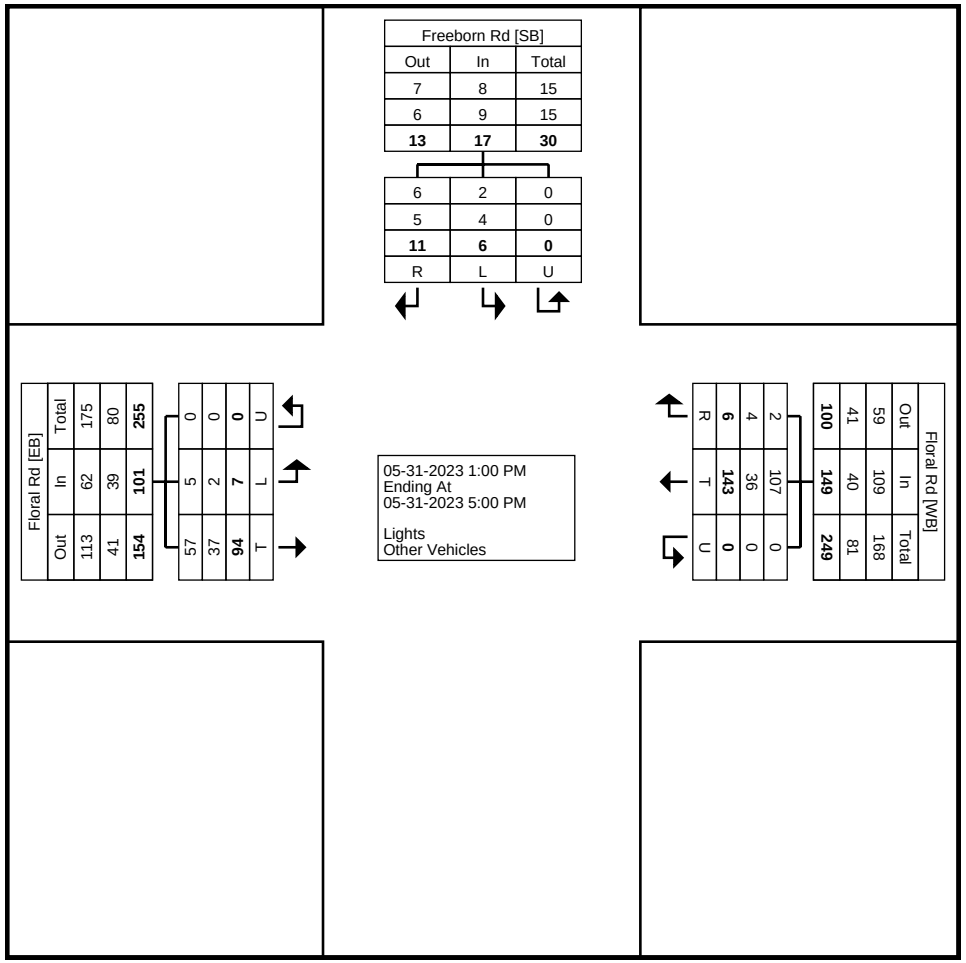

Turning Movement Data Plot

Stantec Consulting Ltd.
300 - 1919 Rose St

Regina, Saskatchewan, Canada S4P 3P1
306 781 6400 erin.harms@stantec.com

Count Name: T4-1 (Floral Rd & Freeborn Rd)
Site Code:
Start Date: 05-31-2023

Turning Movement Peak Hour Data (2:15 PM)

Start Time	Freeborn Rd Southbound				Floral Rd Westbound				Floral Rd Eastbound				
	Right	Left	U-Turn	App. Total	Right	Thru	U-Turn	App. Total	Thru	Left	U-Turn	App. Total	Int. Total
2:15 PM	0	0	0	0	1	11	0	12	9	0	0	9	21
2:30 PM	0	1	0	1	0	10	0	10	6	0	0	6	17
2:45 PM	1	0	0	1	1	6	0	7	5	1	0	6	14
3:00 PM	0	1	0	1	0	11	0	11	8	1	0	9	21
Total	1	2	0	3	2	38	0	40	28	2	0	30	73
Approach %	33.3	66.7	0.0	-	5.0	95.0	0.0	-	93.3	6.7	0.0	-	-
Total %	1.4	2.7	0.0	4.1	2.7	52.1	0.0	54.8	38.4	2.7	0.0	41.1	-
PHF	0.250	0.500	0.000	0.750	0.500	0.864	0.000	0.833	0.778	0.500	0.000	0.833	0.869
Lights	1	0	0	1	0	30	0	30	13	1	0	14	45
% Lights	100.0	0.0	-	33.3	0.0	78.9	-	75.0	46.4	50.0	-	46.7	61.6
Other Vehicles	0	2	0	2	2	8	0	10	15	1	0	16	28
% Other Vehicles	0.0	100.0	-	66.7	100.0	21.1	-	25.0	53.6	50.0	-	53.3	38.4

Stantec Consulting Ltd.
300 - 1919 Rose St

Regina, Saskatchewan, Canada S4P 3P1
306 781 6400 erin.harms@stantec.com

Count Name: T4-1 (Floral Rd & Freeborn Rd)
Site Code:
Start Date: 05-31-2023
Page No: 4

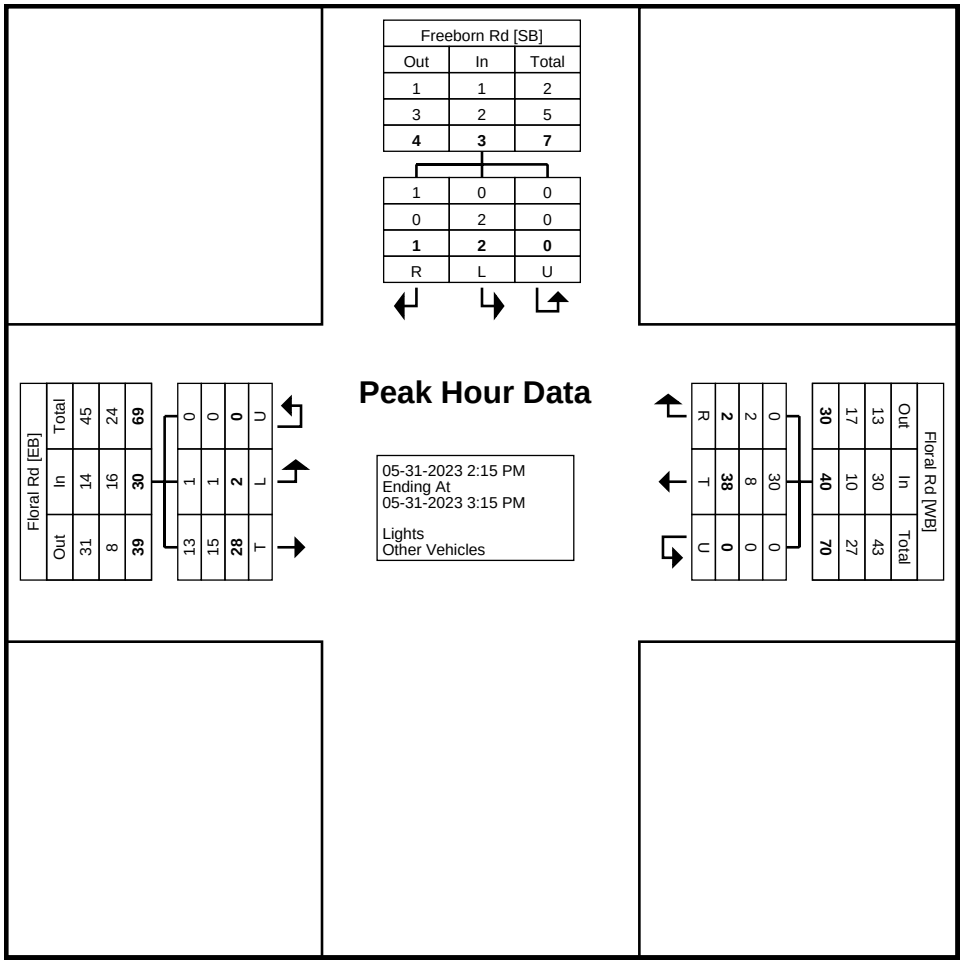

Turning Movement Peak Hour Data Plot (2:15 PM)

Stantec Consulting Ltd.
300 - 1919 Rose St

Regina, Saskatchewan, Canada S4P 3P1
306 781 6400 erin.harms@stantec.com

Count Name: T4-2 (Floral Rd & Freeborn Rd)
Site Code:
Start Date: 06-07-2023

Turning Movement Data

Start Time	Freeborn Rd Southbound				Freeborn Rd Westbound				Floral Rd Eastbound				
	Right	Left	U-Turn	App. Total	Right	Thru	U-Turn	App. Total	Thru	Left	U-Turn	App. Total	Int. Total
5:00 PM	1	0	0	1	0	14	0	14	5	0	0	5	20
5:15 PM	1	0	0	1	1	8	0	9	2	1	0	3	13
5:30 PM	0	0	0	0	0	11	0	11	7	1	0	8	19
5:45 PM	0	1	0	1	0	9	0	9	4	1	0	5	15
Hourly Total	2	1	0	3	1	42	0	43	18	3	0	21	67
6:00 PM	3	0	0	3	0	3	0	3	3	2	0	5	11
6:15 PM	1	1	0	2	0	7	0	7	3	5	0	8	17
6:30 PM	2	0	0	2	1	0	0	1	3	0	0	3	6
6:45 PM	0	0	0	0	0	6	0	6	4	0	0	4	10
Hourly Total	6	1	0	7	1	16	0	17	13	7	0	20	44
7:00 PM	1	0	0	1	0	4	0	4	4	1	0	5	10
7:15 PM	0	0	0	0	0	2	0	2	2	1	0	3	5
7:30 PM	3	0	0	3	0	14	0	14	1	2	0	3	20
7:45 PM	0	0	0	0	0	3	0	3	1	1	0	2	5
Hourly Total	4	0	0	4	0	23	0	23	8	5	0	13	40
8:00 PM	1	0	0	1	0	1	0	1	0	0	0	0	2
8:15 PM	0	1	0	1	0	2	0	2	2	1	0	3	6
8:30 PM	1	0	0	1	0	1	0	1	1	0	0	1	3
8:45 PM	2	0	0	2	0	1	0	1	1	0	0	1	4
Hourly Total	4	1	0	5	0	5	0	5	4	1	0	5	15
9:00 PM	2	0	0	2	0	0	0	0	0	1	0	1	3
9:15 PM	0	0	0	0	0	0	0	0	0	2	0	2	2
9:30 PM	0	0	0	0	0	0	0	0	1	0	0	1	1
9:45 PM	0	1	0	1	1	0	0	1	2	0	0	2	4
Hourly Total	2	1	0	3	1	0	0	1	3	3	0	6	10
10:00 PM	2	0	0	2	0	0	0	0	2	1	0	3	5
10:15 PM	0	0	0	0	0	4	0	4	1	1	0	2	6
10:30 PM	0	0	0	0	0	0	0	0	1	0	0	1	1
10:45 PM	1	0	0	1	0	0	0	0	1	0	0	1	2
Hourly Total	3	0	0	3	0	4	0	4	5	2	0	7	14
11:00 PM	0	0	0	0	0	0	0	0	0	0	0	0	0
11:15 PM	0	0	0	0	0	0	0	0	0	1	0	1	1
11:30 PM	0	0	0	0	0	0	0	0	1	0	0	1	1
11:45 PM	0	0	0	0	0	0	0	0	2	1	0	3	3
Hourly Total	0	0	0	0	0	0	0	0	3	2	0	5	5
12:00 AM	0	1	0	1	0	0	0	0	0	1	0	1	2

12:15 AM	0	0	0	0	0	0	0	0	0	0	0	0	0
12:30 AM	0	0	0	0	0	0	0	0	0	0	0	0	0
12:45 AM	0	0	0	0	0	0	0	0	1	0	0	1	1
Hourly Total	0	1	0	1	0	0	0	0	1	1	0	2	3
1:00 AM	0	0	0	0	0	0	0	0	1	0	0	1	1
1:15 AM	0	0	0	0	0	0	0	0	0	0	0	0	0
1:30 AM	0	0	0	0	0	0	0	0	0	0	0	0	0
1:45 AM	0	0	0	0	0	0	0	0	0	0	0	0	0
Hourly Total	0	0	0	0	0	0	0	0	1	0	0	1	1
2:00 AM	0	0	0	0	0	0	0	0	0	0	0	0	0
2:15 AM	0	0	0	0	0	0	0	0	0	0	0	0	0
2:30 AM	1	0	0	1	0	1	0	1	1	0	0	1	3
2:45 AM	0	0	0	0	0	0	0	0	0	0	0	0	0
Hourly Total	1	0	0	1	0	1	0	1	1	0	0	1	3
3:00 AM	0	0	0	0	0	0	0	0	0	0	0	0	0
3:15 AM	0	0	0	0	0	0	0	0	0	0	0	0	0
3:30 AM	0	0	0	0	0	0	0	0	0	0	0	0	0
3:45 AM	0	0	0	0	0	0	0	0	0	0	0	0	0
Hourly Total	0	0	0	0	0	0	0	0	0	0	0	0	0
4:00 AM	0	0	0	0	0	0	0	0	0	0	0	0	0
4:15 AM	0	0	0	0	0	0	0	0	0	0	0	0	0
4:30 AM	0	0	0	0	0	0	0	0	0	0	0	0	0
4:45 AM	0	0	0	0	0	0	0	0	0	0	0	0	0
Hourly Total	0	0	0	0	0	0	0	0	0	0	0	0	0
5:00 AM	0	0	0	0	0	0	0	0	0	0	0	0	0
5:15 AM	0	0	0	0	0	1	0	1	1	0	0	1	2
5:30 AM	0	0	0	0	0	1	0	1	5	0	0	5	6
5:45 AM	0	0	0	0	0	0	0	0	7	0	0	7	7
Hourly Total	0	0	0	0	0	2	0	2	13	0	0	13	15
6:00 AM	0	0	0	0	0	4	0	4	5	1	0	6	10
6:15 AM	2	2	0	4	0	6	0	6	5	2	0	7	17
6:30 AM	0	0	0	0	0	4	0	4	17	0	0	17	21
6:45 AM	0	0	0	0	0	6	0	6	34	0	0	34	40
Hourly Total	2	2	0	4	0	20	0	20	61	3	0	64	88
7:00 AM	0	0	0	0	0	10	0	10	8	0	0	8	18
7:15 AM	0	0	0	0	0	4	0	4	4	0	0	4	8
7:30 AM	0	0	0	0	0	6	0	6	11	1	0	12	18
7:45 AM	0	0	0	0	0	1	0	1	13	1	0	14	15
Hourly Total	0	0	0	0	0	21	0	21	36	2	0	38	59
8:00 AM	0	1	0	1	0	4	0	4	12	0	0	12	17
8:15 AM	0	1	0	1	0	6	0	6	13	1	0	14	21
8:30 AM	0	1	0	1	0	10	0	10	5	0	0	5	16
8:45 AM	0	0	0	0	0	6	0	6	10	1	0	11	17
Hourly Total	0	3	0	3	0	26	0	26	40	2	0	42	71
9:00 AM	0	0	0	0	0	9	0	9	4	0	0	4	13
9:15 AM	0	0	0	0	0	7	0	7	5	0	0	5	12
9:30 AM	0	0	0	0	1	6	0	7	10	0	0	10	17
9:45 AM	0	0	0	0	0	6	0	6	6	0	0	6	12
Hourly Total	0	0	0	0	1	28	0	29	25	0	0	25	54
10:00 AM	0	1	0	1	0	3	0	3	10	0	0	10	14
10:15 AM	0	0	0	0	0	7	0	7	6	0	0	6	13
10:30 AM	0	0	0	0	1	8	0	9	4	0	0	4	13

10:45 AM	0	0	0	0	0	6	0	6	7	0	0	7	13
Hourly Total	0	1	0	1	1	24	0	25	27	0	0	27	53
11:00 AM	1	0	0	1	0	8	0	8	5	1	0	6	15
11:15 AM	2	0	0	2	0	9	0	9	9	0	0	9	20
11:30 AM	0	0	0	0	0	3	0	3	3	0	0	3	6
11:45 AM	1	0	0	1	1	6	0	7	4	1	0	5	13
Hourly Total	4	0	0	4	1	26	0	27	21	2	0	23	54
12:00 PM	0	0	0	0	0	4	0	4	6	0	0	6	10
12:15 PM	0	0	0	0	0	7	1	8	13	2	0	15	23
12:30 PM	0	0	0	0	0	9	0	9	11	1	0	12	21
12:45 PM	0	0	0	0	0	8	0	8	5	0	0	5	13
Hourly Total	0	0	0	0	0	28	1	29	35	3	0	38	67
Grand Total	28	11	0	39	6	266	1	273	315	36	0	351	663
Approach %	71.8	28.2	0.0	-	2.2	97.4	0.4	-	89.7	10.3	0.0	-	-
Total %	4.2	1.7	0.0	5.9	0.9	40.1	0.2	41.2	47.5	5.4	0.0	52.9	-
Lights	26	7	0	33	4	182	0	186	237	35	0	272	491
% Lights	92.9	63.6	-	84.6	66.7	68.4	0.0	68.1	75.2	97.2	-	77.5	74.1
Other Vehicles	2	4	0	6	2	84	1	87	78	1	0	79	172
% Other Vehicles	7.1	36.4	-	15.4	33.3	31.6	100.0	31.9	24.8	2.8	-	22.5	25.9

Stantec Consulting Ltd.
300 - 1919 Rose St

Regina, Saskatchewan, Canada S4P 3P1
306 781 6400 erin.harms@stantec.com

Count Name: T4-2 (Floral Rd & Freeborn Rd)
Site Code:
Start Date: 06-07-2023

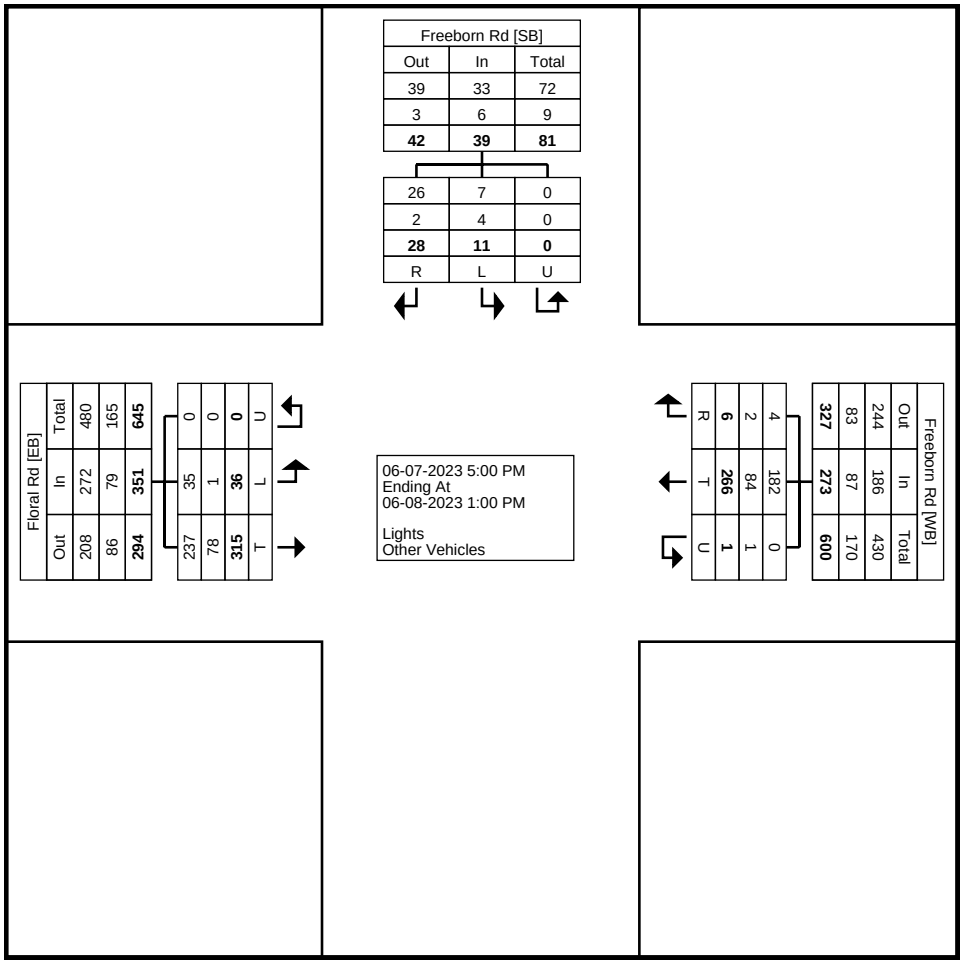

Turning Movement Data Plot

Stantec Consulting Ltd.
300 - 1919 Rose St

Regina, Saskatchewan, Canada S4P 3P1
306 781 6400 erin.harms@stantec.com

Count Name: T4-2 (Floral Rd & Freeborn Rd)
Site Code:
Start Date: 06-07-2023

Turning Movement Peak Hour Data (5:00 PM)

Start Time	Freeborn Rd Southbound				Freeborn Rd Westbound				Floral Rd Eastbound				
	Right	Left	U-Turn	App. Total	Right	Thru	U-Turn	App. Total	Thru	Left	U-Turn	App. Total	Int. Total
5:00 PM	1	0	0	1	0	14	0	14	5	0	0	5	20
5:15 PM	1	0	0	1	1	8	0	9	2	1	0	3	13
5:30 PM	0	0	0	0	0	11	0	11	7	1	0	8	19
5:45 PM	0	1	0	1	0	9	0	9	4	1	0	5	15
Total	2	1	0	3	1	42	0	43	18	3	0	21	67
Approach %	66.7	33.3	0.0	-	2.3	97.7	0.0	-	85.7	14.3	0.0	-	-
Total %	3.0	1.5	0.0	4.5	1.5	62.7	0.0	64.2	26.9	4.5	0.0	31.3	-
PHF	0.500	0.250	0.000	0.750	0.250	0.750	0.000	0.768	0.643	0.750	0.000	0.656	0.838
Lights	2	1	0	3	1	37	0	38	9	3	0	12	53
% Lights	100.0	100.0	-	100.0	100.0	88.1	-	88.4	50.0	100.0	-	57.1	79.1
Other Vehicles	0	0	0	0	0	5	0	5	9	0	0	9	14
% Other Vehicles	0.0	0.0	-	0.0	0.0	11.9	-	11.6	50.0	0.0	-	42.9	20.9

Stantec Consulting Ltd.
300 - 1919 Rose St

Regina, Saskatchewan, Canada S4P 3P1
306 781 6400 erin.harms@stantec.com

Count Name: T4-2 (Floral Rd & Freeborn Rd)
Site Code:
Start Date: 06-07-2023

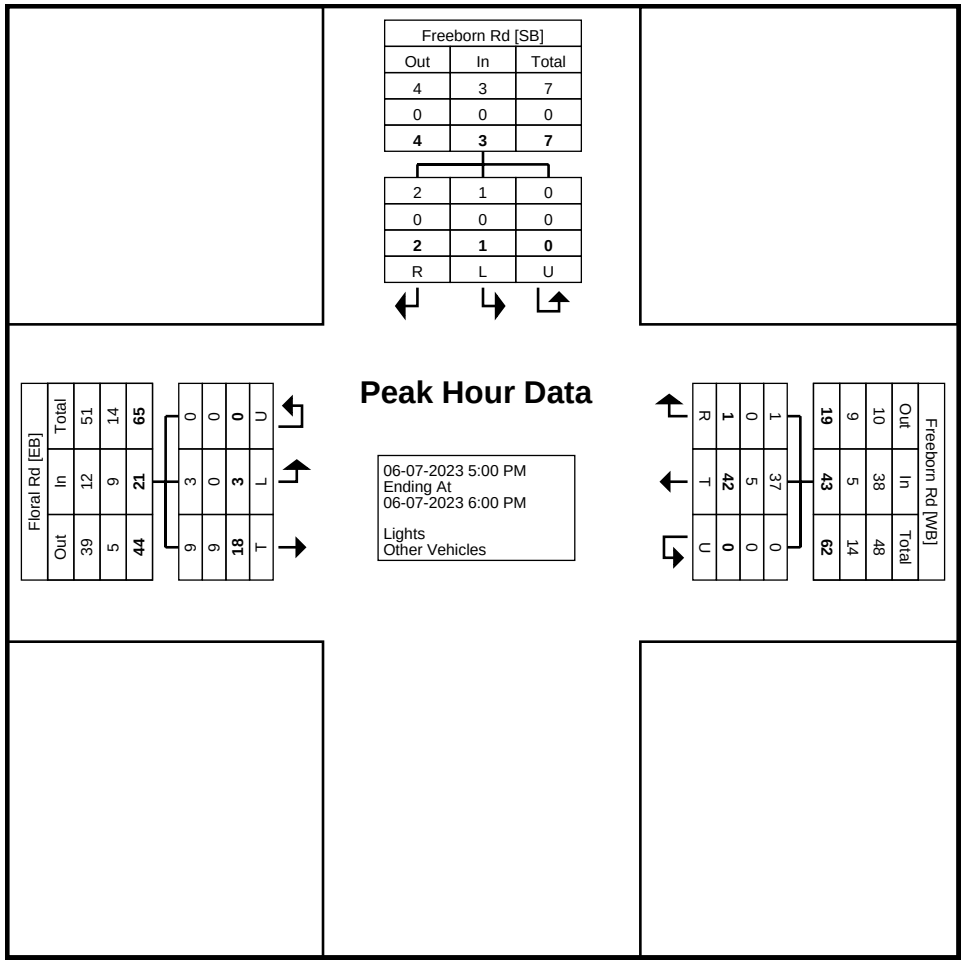

Turning Movement Peak Hour Data Plot (5:00 PM)

Stantec Consulting Ltd.
300 - 1919 Rose St

Regina, Saskatchewan, Canada S4P 3P1
306 781 6400 erin.harms@stantec.com

Count Name: T4-2 (Floral Rd & Freeborn Rd)
Site Code:
Start Date: 06-07-2023

Turning Movement Peak Hour Data (6:15 AM)

Start Time	Freeborn Rd Southbound				Freeborn Rd Westbound				Floral Rd Eastbound				
	Right	Left	U-Turn	App. Total	Right	Thru	U-Turn	App. Total	Thru	Left	U-Turn	App. Total	Int. Total
6:15 AM	2	2	0	4	0	6	0	6	5	2	0	7	17
6:30 AM	0	0	0	0	0	4	0	4	17	0	0	17	21
6:45 AM	0	0	0	0	0	6	0	6	34	0	0	34	40
7:00 AM	0	0	0	0	0	10	0	10	8	0	0	8	18
Total	2	2	0	4	0	26	0	26	64	2	0	66	96
Approach %	50.0	50.0	0.0	-	0.0	100.0	0.0	-	97.0	3.0	0.0	-	-
Total %	2.1	2.1	0.0	4.2	0.0	27.1	0.0	27.1	66.7	2.1	0.0	68.8	-
PHF	0.250	0.250	0.000	0.250	0.000	0.650	0.000	0.650	0.471	0.250	0.000	0.485	0.600
Lights	2	1	0	3	0	13	0	13	59	2	0	61	77
% Lights	100.0	50.0	-	75.0	-	50.0	-	50.0	92.2	100.0	-	92.4	80.2
Other Vehicles	0	1	0	1	0	13	0	13	5	0	0	5	19
% Other Vehicles	0.0	50.0	-	25.0	-	50.0	-	50.0	7.8	0.0	-	7.6	19.8

Stantec Consulting Ltd.
300 - 1919 Rose St

Regina, Saskatchewan, Canada S4P 3P1
306 781 6400 erin.harms@stantec.com

Count Name: T4-2 (Floral Rd & Freeborn Rd)
Site Code:
Start Date: 06-07-2023

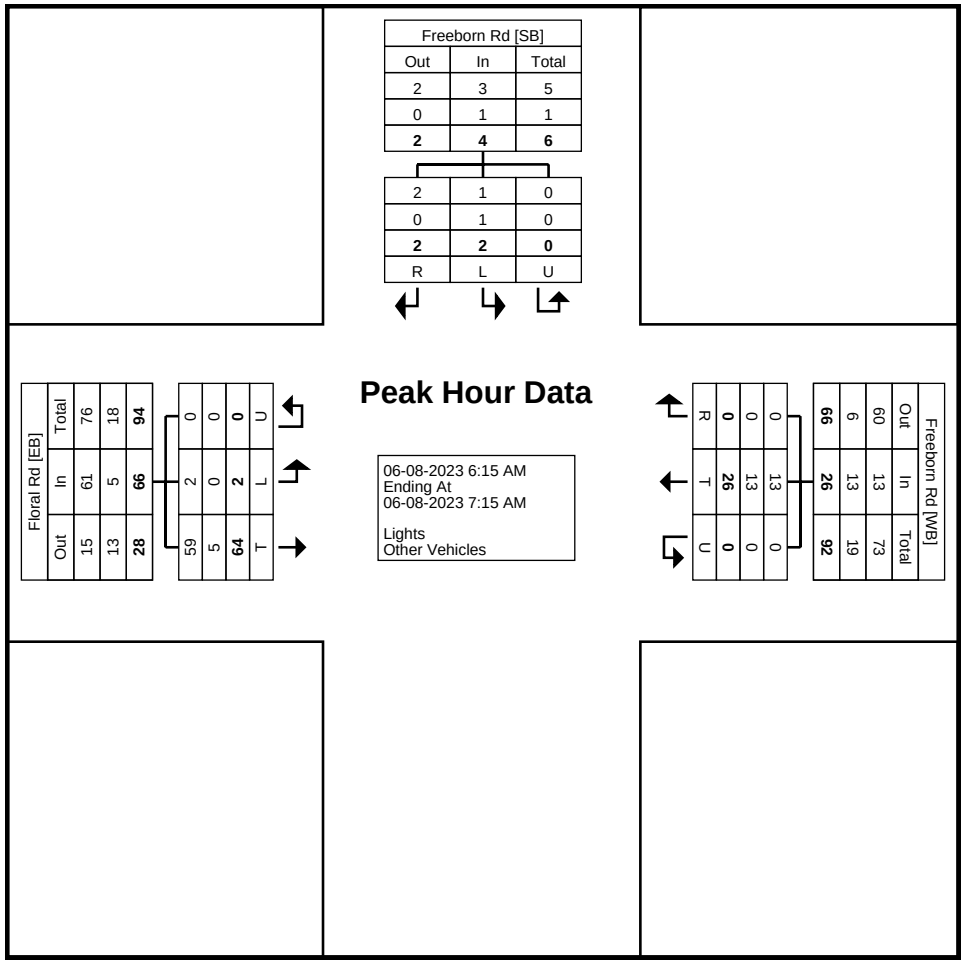

Turning Movement Peak Hour Data Plot (6:15 AM)

Stantec Consulting Ltd.
300 - 1919 Rose St

Regina, Saskatchewan, Canada S4P 3P1
306 781 6400 erin.harms@stantec.com

Count Name: T4-2 (Floral Rd & Freeborn Rd)
Site Code:
Start Date: 06-07-2023

Turning Movement Peak Hour Data (12:00 PM)

Start Time	Freeborn Rd Southbound				Freeborn Rd Westbound				Floral Rd Eastbound				
	Right	Left	U-Turn	App. Total	Right	Thru	U-Turn	App. Total	Thru	Left	U-Turn	App. Total	Int. Total
12:00 PM	0	0	0	0	0	4	0	4	6	0	0	6	10
12:15 PM	0	0	0	0	0	7	1	8	13	2	0	15	23
12:30 PM	0	0	0	0	0	9	0	9	11	1	0	12	21
12:45 PM	0	0	0	0	0	8	0	8	5	0	0	5	13
Total	0	0	0	0	0	28	1	29	35	3	0	38	67
Approach %	0.0	0.0	0.0	-	0.0	96.6	3.4	-	92.1	7.9	0.0	-	-
Total %	0.0	0.0	0.0	0.0	0.0	41.8	1.5	43.3	52.2	4.5	0.0	56.7	-
PHF	0.000	0.000	0.000	0.000	0.000	0.778	0.250	0.806	0.673	0.375	0.000	0.633	0.728
Lights	0	0	0	0	0	19	0	19	21	3	0	24	43
% Lights	-	-	-	-	-	67.9	0.0	65.5	60.0	100.0	-	63.2	64.2
Other Vehicles	0	0	0	0	0	9	1	10	14	0	0	14	24
% Other Vehicles	-	-	-	-	-	32.1	100.0	34.5	40.0	0.0	-	36.8	35.8

Stantec Consulting Ltd.
300 - 1919 Rose St

Regina, Saskatchewan, Canada S4P 3P1
306 781 6400 erin.harms@stantec.com

Count Name: T4-2 (Floral Rd & Freeborn Rd)
Site Code:
Start Date: 06-07-2023

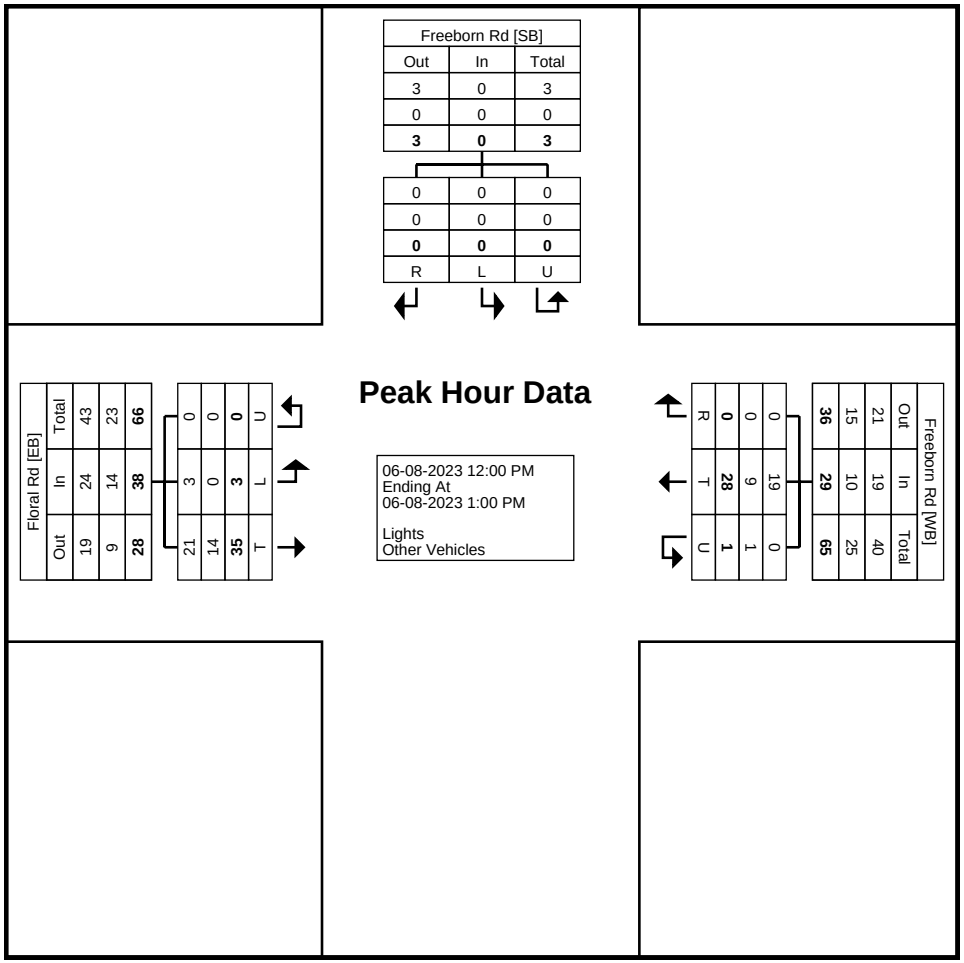

Turning Movement Peak Hour Data Plot (12:00 PM)

Stantec Consulting Ltd.
300 - 1919 Rose St

Regina, Saskatchewan, Canada S4P 3P1
306 781 6400 erin.harms@stantec.com

Count Name: T5 (Baker Rd & Hwy 663)
Site Code:
Start Date: 05-29-2023

Turning Movement Data

Start Time	Hwy 663 Southbound					Baker Rd Westbound					Hwy 663 Northbound					Baker Rd Eastbound					
	Right	Thru	Left	U-Turn	App. Total	Right	Thru	Left	U-Turn	App. Total	Right	Thru	Left	U-Turn	App. Total	Right	Thru	Left	U-Turn	App. Total	Int. Total
11:00 AM	1	2	1	0	4	0	0	0	0	0	0	4	0	0	4	0	0	1	0	1	9
11:15 AM	1	1	0	0	2	0	0	0	0	0	0	3	0	0	3	0	0	0	0	0	5
11:30 AM	1	1	0	0	2	0	0	0	0	0	0	2	0	0	2	0	0	1	0	1	5
11:45 AM	1	3	0	0	4	0	0	0	0	0	0	2	0	0	2	0	0	1	0	1	7
Hourly Total	4	7	1	0	12	0	0	0	0	0	0	11	0	0	11	0	0	3	0	3	26
12:00 PM	0	2	0	0	2	0	0	0	0	0	0	0	0	0	0	0	0	0	0	0	2
12:15 PM	0	4	0	0	4	1	0	0	0	1	0	1	0	0	1	0	0	1	0	1	7
12:30 PM	0	2	0	0	2	0	0	0	0	0	0	4	0	0	4	0	0	0	0	0	6
12:45 PM	1	3	0	0	4	0	0	0	0	0	0	2	0	0	2	0	0	0	0	0	6
Hourly Total	1	11	0	0	12	1	0	0	0	1	0	7	0	0	7	0	0	1	0	1	21
1:00 PM	0	2	0	0	2	0	0	0	0	0	0	3	0	0	3	0	0	0	0	0	5
1:15 PM	0	3	0	0	3	0	0	0	0	0	0	2	1	0	3	0	0	0	0	0	6
1:30 PM	0	0	0	0	0	0	0	0	0	0	0	2	0	0	2	0	0	1	0	1	3
1:45 PM	2	4	0	0	6	0	0	0	0	0	0	2	0	0	2	0	0	0	0	0	8
Hourly Total	2	9	0	0	11	0	0	0	0	0	0	9	1	0	10	0	0	1	0	1	22
2:00 PM	0	2	0	0	2	0	0	0	0	0	0	2	1	0	3	0	0	1	0	1	6
2:15 PM	0	0	0	0	0	0	0	0	0	0	0	2	0	0	2	1	0	0	0	1	3
2:30 PM	0	4	0	0	4	0	0	0	0	0	0	1	0	0	1	0	0	1	0	1	6
2:45 PM	0	4	0	0	4	0	0	0	0	0	0	6	1	0	7	0	0	1	0	1	12
Hourly Total	0	10	0	0	10	0	0	0	0	0	0	11	2	0	13	1	0	3	0	4	27
3:00 PM	1	3	0	0	4	0	0	0	0	0	0	1	0	0	1	0	0	0	0	0	5
3:15 PM	1	5	0	0	6	0	0	0	0	0	0	2	0	0	2	0	0	0	0	0	8
3:30 PM	1	6	0	0	7	0	0	0	0	0	0	7	0	0	7	0	0	0	0	0	14
3:45 PM	2	7	0	0	9	0	0	0	0	0	0	2	0	0	2	0	0	0	0	0	11
Hourly Total	5	21	0	0	26	0	0	0	0	0	0	12	0	0	12	0	0	0	0	0	38
4:00 PM	1	1	1	0	3	0	0	0	0	0	0	4	0	0	4	0	0	0	0	0	7
4:15 PM	0	13	0	0	13	0	0	1	0	1	0	5	0	0	5	0	0	1	0	1	20
4:30 PM	0	9	0	0	9	0	0	0	0	0	0	2	0	0	2	0	0	0	0	0	11
4:45 PM	1	13	0	0	14	0	0	0	0	0	0	2	0	0	2	0	0	0	0	0	16
Hourly Total	2	36	1	0	39	0	0	1	0	1	0	13	0	0	13	0	0	1	0	1	54
5:00 PM	1	10	0	0	11	0	0	0	0	0	0	2	0	0	2	0	0	0	0	0	13
5:15 PM	0	7	0	0	7	0	0	0	0	0	0	5	0	0	5	2	0	0	0	2	14
5:30 PM	0	10	0	0	10	0	0	0	0	0	0	2	0	0	2	0	0	0	0	0	12
5:45 PM	0	2	0	0	2	0	0	0	0	0	0	6	0	0	6	0	0	0	0	0	8
Hourly Total	1	29	0	0	30	0	0	0	0	0	0	15	0	0	15	2	0	0	0	2	47
6:00 PM	2	4	1	0	7	0	0	0	0	0	0	6	0	0	6	0	0	1	0	1	14

6:15 PM	1	2	0	0	3	0	0	0	0	0	0	2	0	0	2	0	0	1	0	1	6
6:30 PM	0	4	0	0	4	0	0	0	0	0	0	1	0	0	1	1	0	0	0	1	6
6:45 PM	0	5	0	0	5	1	0	0	0	1	0	2	0	0	2	0	0	1	0	1	9
Hourly Total	3	15	1	0	19	1	0	0	0	1	0	11	0	0	11	1	0	3	0	4	35
7:00 PM	1	8	0	0	9	0	0	0	0	0	0	2	0	0	2	0	0	0	0	0	11
7:15 PM	0	4	0	0	4	0	0	0	0	0	0	5	0	0	5	0	0	0	0	0	9
7:30 PM	0	5	0	0	5	0	0	0	0	0	0	1	0	0	1	0	0	0	0	0	6
7:45 PM	1	6	0	0	7	0	0	0	0	0	0	0	0	0	0	0	0	0	0	0	7
Hourly Total	2	23	0	0	25	0	0	0	0	0	0	8	0	0	8	0	0	0	0	0	33
8:00 PM	0	3	0	0	3	0	0	0	0	0	0	3	0	0	3	1	0	0	0	1	7
8:15 PM	0	3	0	0	3	0	0	0	0	0	0	1	0	0	1	0	0	0	0	0	4
8:30 PM	1	4	0	0	5	0	0	0	0	0	0	1	0	0	1	1	0	0	0	1	7
8:45 PM	0	4	0	0	4	0	0	0	0	0	0	1	0	0	1	0	0	0	0	0	5
Hourly Total	1	14	0	0	15	0	0	0	0	0	0	6	0	0	6	2	0	0	0	2	23
9:00 PM	1	6	0	0	7	0	0	0	0	0	0	0	0	0	0	0	0	0	0	0	7
9:15 PM	0	3	0	0	3	0	0	0	0	0	0	1	0	0	1	0	0	0	0	0	4
9:30 PM	0	4	0	0	4	0	0	0	0	0	0	0	0	0	0	0	0	0	0	0	4
9:45 PM	0	1	0	0	1	0	0	0	0	0	0	0	0	0	0	0	0	0	0	0	1
Hourly Total	1	14	0	0	15	0	0	0	0	0	0	1	0	0	1	0	0	0	0	0	16
10:00 PM	0	0	0	0	0	0	0	0	0	0	0	1	0	0	1	0	0	0	0	0	1
10:15 PM	0	1	0	0	1	0	0	0	0	0	0	2	0	0	2	0	0	0	0	0	3
10:30 PM	0	0	0	0	0	0	0	0	0	0	0	0	0	0	0	0	0	0	0	0	0
10:45 PM	0	2	0	0	2	0	0	0	0	0	0	0	0	0	0	0	0	0	0	0	2
Hourly Total	0	3	0	0	3	0	0	0	0	0	0	3	0	0	3	0	0	0	0	0	6
11:00 PM	0	1	0	0	1	0	0	0	0	0	0	0	0	0	0	0	0	0	0	0	1
11:15 PM	0	0	0	0	0	0	0	0	0	0	0	2	0	0	2	0	0	0	0	0	2
11:30 PM	0	0	0	0	0	0	0	0	0	0	0	0	0	0	0	0	0	0	0	0	0
11:45 PM	0	1	0	0	1	0	0	0	0	0	0	0	0	0	0	0	0	0	0	0	1
Hourly Total	0	2	0	0	2	0	0	0	0	0	0	2	0	0	2	0	0	0	0	0	4
12:00 AM	0	0	0	0	0	0	0	0	0	0	0	0	0	0	0	0	0	0	0	0	0
12:15 AM	0	0	0	0	0	0	0	0	0	0	0	0	0	0	0	0	0	0	0	0	0
12:30 AM	0	1	0	0	1	0	0	0	0	0	0	0	0	0	0	0	0	0	0	0	1
12:45 AM	0	0	0	0	0	0	0	0	0	0	0	0	0	0	0	0	0	0	0	0	0
Hourly Total	0	1	0	0	1	0	0	0	0	0	0	0	0	0	0	0	0	0	0	0	1
1:00 AM	0	0	0	0	0	0	0	0	0	0	0	0	0	0	0	0	0	0	0	0	0
1:15 AM	0	1	0	0	1	0	0	0	0	0	0	0	0	0	0	0	0	0	0	0	1
1:30 AM	0	0	0	0	0	0	0	0	0	0	0	0	0	0	0	0	0	0	0	0	0
1:45 AM	0	0	0	0	0	0	0	1	0	1	0	0	0	0	0	0	1	0	0	1	2
Hourly Total	0	1	0	0	1	0	0	1	0	1	0	0	0	0	0	0	1	0	0	1	3
2:00 AM	0	0	0	0	0	0	0	0	0	0	0	0	0	0	0	0	0	0	0	0	0
2:15 AM	0	0	0	0	0	0	0	0	0	0	0	0	0	0	0	0	0	0	0	0	0
2:30 AM	0	0	0	0	0	0	0	0	0	0	0	0	0	0	0	0	0	0	0	0	0
2:45 AM	0	0	0	0	0	0	0	0	0	0	0	0	0	0	0	0	0	0	0	0	0
Hourly Total	0	0	0	0	0	0	0	0	0	0	0	0	0	0	0	0	0	0	0	0	0
3:00 AM	0	0	0	0	0	0	0	0	0	0	0	0	0	0	0	0	0	0	0	0	0
3:15 AM	0	0	0	0	0	0	0	0	0	0	0	0	0	0	0	0	0	0	0	0	0
3:30 AM	0	0	0	0	0	0	0	0	0	0	0	0	0	0	0	0	0	0	0	0	0
3:45 AM	0	0	0	0	0	0	0	0	0	0	0	0	0	0	0	0	0	0	0	0	0
Hourly Total	0	0	0	0	0	0	0	0	0	0	0	0	0	0	0	0	0	0	0	0	0
4:00 AM	0	0	0	0	0	0	0	0	0	0	0	1	0	0	1	0	0	0	0	0	1
4:15 AM	0	0	0	0	0	0	0	0	0	0	0	1	0	0	1	0	0	0	0	0	1
4:30 AM	0	0	0	0	0	0	0	0	0	0	0	1	0	0	1	0	0	0	0	0	1

4:45 AM	0	0	0	0	0	0	0	0	0	0	0	1	0	0	1	0	0	0	0	0	1
Hourly Total	0	0	0	0	0	0	0	0	0	0	0	4	0	0	4	0	0	0	0	0	4
5:00 AM	0	1	0	0	1	0	0	0	0	0	0	1	0	0	1	0	0	0	0	0	2
5:15 AM	0	0	0	0	0	0	0	0	0	0	0	3	0	0	3	0	0	1	0	1	4
5:30 AM	0	0	0	0	0	0	0	0	0	0	0	1	0	0	1	0	0	0	0	0	1
5:45 AM	0	0	0	0	0	0	0	0	0	0	0	1	0	0	1	0	0	0	0	0	1
Hourly Total	0	1	0	0	1	0	0	0	0	0	0	6	0	0	6	0	0	1	0	1	8
6:00 AM	0	0	0	0	0	0	0	0	0	0	0	5	0	0	5	0	0	0	0	0	5
6:15 AM	0	0	0	0	0	0	0	0	0	0	0	2	1	0	3	0	0	0	0	0	3
6:30 AM	0	0	0	0	0	0	0	0	0	0	0	3	0	0	3	0	0	0	0	0	3
6:45 AM	0	6	1	0	7	0	0	0	0	0	0	7	0	0	7	0	0	0	0	0	14
Hourly Total	0	6	1	0	7	0	0	0	0	0	0	17	1	0	18	0	0	0	0	0	25
7:00 AM	0	1	0	0	1	0	0	0	0	0	0	9	0	0	9	0	0	0	0	0	10
7:15 AM	0	2	0	0	2	0	0	0	0	0	0	7	0	0	7	0	0	1	0	1	10
7:30 AM	1	2	0	0	3	0	0	0	0	0	0	8	0	0	8	0	0	1	0	1	12
7:45 AM	0	0	0	0	0	0	0	0	0	0	0	3	0	0	3	1	0	0	0	1	4
Hourly Total	1	5	0	0	6	0	0	0	0	0	0	27	0	0	27	1	0	2	0	3	36
8:00 AM	0	5	0	0	5	0	0	0	0	0	0	7	0	0	7	0	0	2	0	2	14
8:15 AM	0	1	1	0	2	0	0	0	0	0	0	11	0	0	11	0	0	1	0	1	14
8:30 AM	1	5	0	0	6	0	0	0	0	0	0	5	1	0	6	0	0	0	0	0	12
8:45 AM	2	3	0	0	5	0	0	0	0	0	0	5	0	0	5	0	0	0	0	0	10
Hourly Total	3	14	1	0	18	0	0	0	0	0	0	28	1	0	29	0	0	3	0	3	50
9:00 AM	0	2	0	0	2	0	0	0	0	0	0	3	0	0	3	0	0	1	0	1	6
9:15 AM	0	1	0	0	1	0	0	0	0	0	0	4	0	0	4	0	0	0	0	0	5
9:30 AM	0	2	0	0	2	0	0	0	0	0	0	3	0	0	3	0	0	0	0	0	5
9:45 AM	0	2	0	0	2	0	0	0	0	0	0	2	0	0	2	0	0	0	0	0	4
Hourly Total	0	7	0	0	7	0	0	0	0	0	0	12	0	0	12	0	0	1	0	1	20
10:00 AM	1	1	0	0	2	0	0	0	0	0	0	1	0	0	1	0	0	0	0	0	3
10:15 AM	0	1	0	0	1	0	0	0	0	0	0	0	0	0	0	0	0	0	0	0	1
10:30 AM	0	1	0	0	1	0	0	0	0	0	0	4	0	0	4	0	0	0	0	0	5
10:45 AM	0	6	0	0	6	0	0	0	0	0	0	0	0	0	0	0	0	0	0	0	6
Hourly Total	1	9	0	0	10	0	0	0	0	0	0	5	0	0	5	0	0	0	0	0	15
Grand Total	27	238	5	0	270	2	0	2	0	4	0	208	5	0	213	7	1	19	0	27	514
Approach %	10.0	88.1	1.9	0.0	-	50.0	0.0	50.0	0.0	-	0.0	97.7	2.3	0.0	-	25.9	3.7	70.4	0.0	-	-
Total %	5.3	46.3	1.0	0.0	52.5	0.4	0.0	0.4	0.0	0.8	0.0	40.5	1.0	0.0	41.4	1.4	0.2	3.7	0.0	5.3	-
Lights	25	235	5	0	265	2	0	2	0	4	0	203	5	0	208	6	1	17	0	24	501
% Lights	92.6	98.7	100.0	-	98.1	100.0	-	100.0	-	100.0	-	97.6	100.0	-	97.7	85.7	100.0	89.5	-	88.9	97.5
Other Vehicles	2	3	0	0	5	0	0	0	0	0	0	5	0	0	5	1	0	2	0	3	13
% Other Vehicles	7.4	1.3	0.0	-	1.9	0.0	-	0.0	-	0.0	-	2.4	0.0	-	2.3	14.3	0.0	10.5	-	11.1	2.5

Stantec Consulting Ltd.
300 - 1919 Rose St

Regina, Saskatchewan, Canada S4P 3P1
306 781 6400 erin.harms@stantec.com

Count Name: T5 (Baker Rd & Hwy 663)
Site Code:
Start Date: 05-29-2023

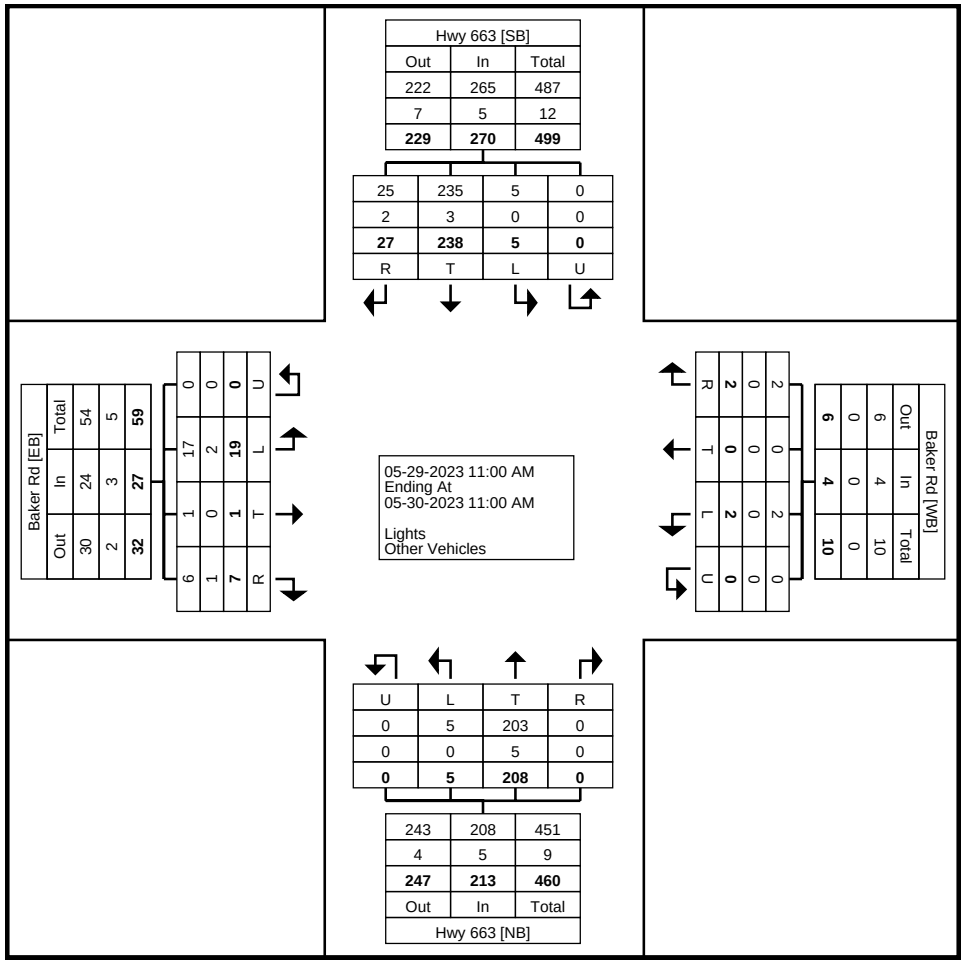

Turning Movement Data Plot

Stantec Consulting Ltd.
300 - 1919 Rose St

Regina, Saskatchewan, Canada S4P 3P1
306 781 6400 erin.harms@stantec.com

Count Name: T5 (Baker Rd & Hwy 663)
Site Code:
Start Date: 05-29-2023

Turning Movement Peak Hour Data (11:00 AM)

Start Time	Hwy 663 Southbound					Baker Rd Westbound					Hwy 663 Northbound					Baker Rd Eastbound					
	Right	Thru	Left	U-Turn	App. Total	Right	Thru	Left	U-Turn	App. Total	Right	Thru	Left	U-Turn	App. Total	Right	Thru	Left	U-Turn	App. Total	Int. Total
11:00 AM	1	2	1	0	4	0	0	0	0	0	0	4	0	0	4	0	0	1	0	1	9
11:15 AM	1	1	0	0	2	0	0	0	0	0	0	3	0	0	3	0	0	0	0	0	5
11:30 AM	1	1	0	0	2	0	0	0	0	0	0	2	0	0	2	0	0	1	0	1	5
11:45 AM	1	3	0	0	4	0	0	0	0	0	0	2	0	0	2	0	0	1	0	1	7
Total	4	7	1	0	12	0	0	0	0	0	0	11	0	0	11	0	0	3	0	3	26
Approach %	33.3	58.3	8.3	0.0	-	0.0	0.0	0.0	0.0	-	0.0	100.0	0.0	0.0	-	0.0	0.0	100.0	0.0	-	-
Total %	15.4	26.9	3.8	0.0	46.2	0.0	0.0	0.0	0.0	0.0	0.0	42.3	0.0	0.0	42.3	0.0	0.0	11.5	0.0	11.5	-
PHF	1.000	0.583	0.250	0.000	0.750	0.000	0.000	0.000	0.000	0.000	0.000	0.688	0.000	0.000	0.688	0.000	0.000	0.750	0.000	0.750	0.722
Lights	4	7	1	0	12	0	0	0	0	0	0	10	0	0	10	0	0	3	0	3	25
% Lights	100.0	100.0	100.0	-	100.0	-	-	-	-	-	-	90.9	-	-	90.9	-	-	100.0	-	100.0	96.2
Other Vehicles	0	0	0	0	0	0	0	0	0	0	0	1	0	0	1	0	0	0	0	0	1
% Other Vehicles	0.0	0.0	0.0	-	0.0	-	-	-	-	-	-	9.1	-	-	9.1	-	-	0.0	-	0.0	3.8

Stantec Consulting Ltd.
300 - 1919 Rose St

Regina, Saskatchewan, Canada S4P 3P1
306 781 6400 erin.harms@stantec.com

Count Name: T5 (Baker Rd & Hwy 663)
Site Code:
Start Date: 05-29-2023

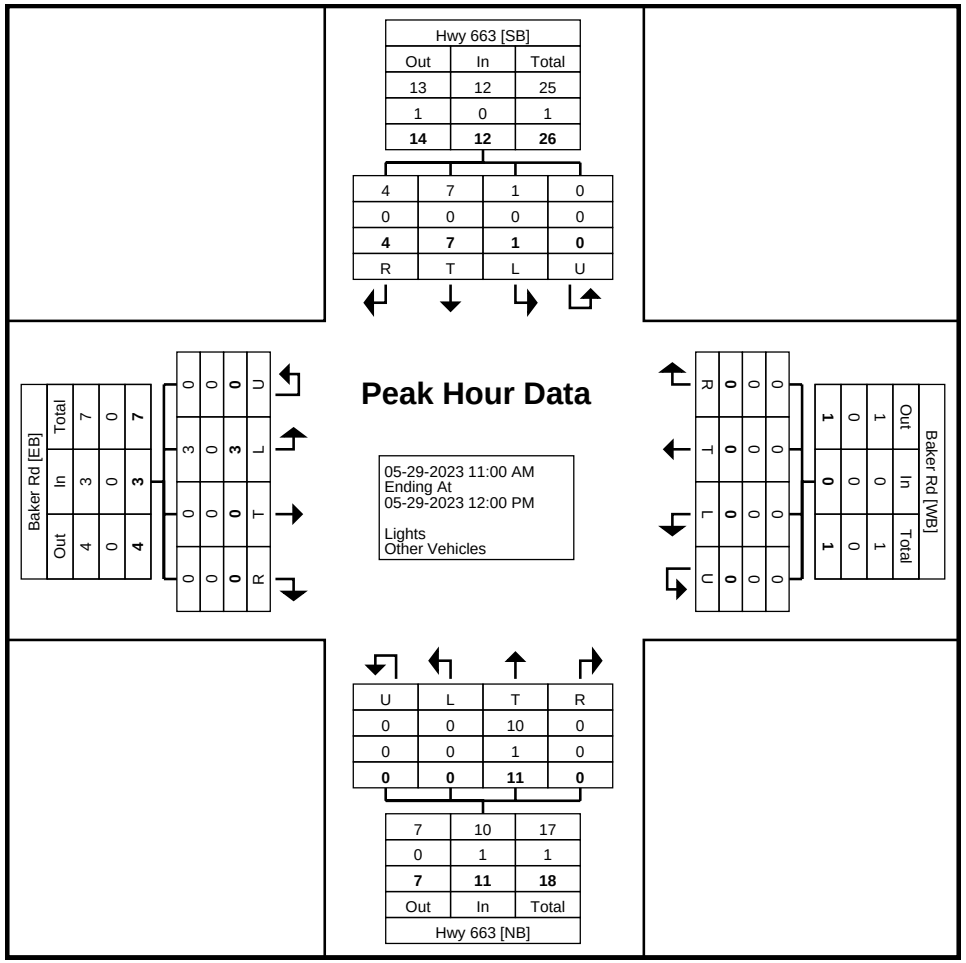

Turning Movement Peak Hour Data Plot (11:00 AM)

Stantec Consulting Ltd.
300 - 1919 Rose St

Regina, Saskatchewan, Canada S4P 3P1
306 781 6400 erin.harms@stantec.com

Count Name: T5 (Baker Rd & Hwy 663)
Site Code:
Start Date: 05-29-2023

Turning Movement Peak Hour Data (4:15 PM)

Start Time	Hwy 663 Southbound					Baker Rd Westbound					Hwy 663 Northbound					Baker Rd Eastbound					
	Right	Thru	Left	U-Turn	App. Total	Right	Thru	Left	U-Turn	App. Total	Right	Thru	Left	U-Turn	App. Total	Right	Thru	Left	U-Turn	App. Total	Int. Total
4:15 PM	0	13	0	0	13	0	0	1	0	1	0	5	0	0	5	0	0	1	0	1	20
4:30 PM	0	9	0	0	9	0	0	0	0	0	0	2	0	0	2	0	0	0	0	0	11
4:45 PM	1	13	0	0	14	0	0	0	0	0	0	2	0	0	2	0	0	0	0	0	16
5:00 PM	1	10	0	0	11	0	0	0	0	0	0	2	0	0	2	0	0	0	0	0	13
Total	2	45	0	0	47	0	0	1	0	1	0	11	0	0	11	0	0	1	0	1	60
Approach %	4.3	95.7	0.0	0.0	-	0.0	0.0	100.0	0.0	-	0.0	100.0	0.0	0.0	-	0.0	0.0	100.0	0.0	-	-
Total %	3.3	75.0	0.0	0.0	78.3	0.0	0.0	1.7	0.0	1.7	0.0	18.3	0.0	0.0	18.3	0.0	0.0	1.7	0.0	1.7	-
PHF	0.500	0.865	0.000	0.000	0.839	0.000	0.000	0.250	0.000	0.250	0.000	0.550	0.000	0.000	0.550	0.000	0.000	0.250	0.000	0.250	0.750
Lights	2	45	0	0	47	0	0	1	0	1	0	11	0	0	11	0	0	1	0	1	60
% Lights	100.0	100.0	-	-	100.0	-	-	100.0	-	100.0	-	100.0	-	-	100.0	-	-	100.0	-	100.0	100.0
Other Vehicles	0	0	0	0	0	0	0	0	0	0	0	0	0	0	0	0	0	0	0	0	0
% Other Vehicles	0.0	0.0	-	-	0.0	-	-	0.0	-	0.0	-	0.0	-	-	0.0	-	-	0.0	-	0.0	0.0

Stantec Consulting Ltd.
300 - 1919 Rose St

Regina, Saskatchewan, Canada S4P 3P1
306 781 6400 erin.harms@stantec.com

Count Name: T5 (Baker Rd & Hwy 663)
Site Code:
Start Date: 05-29-2023

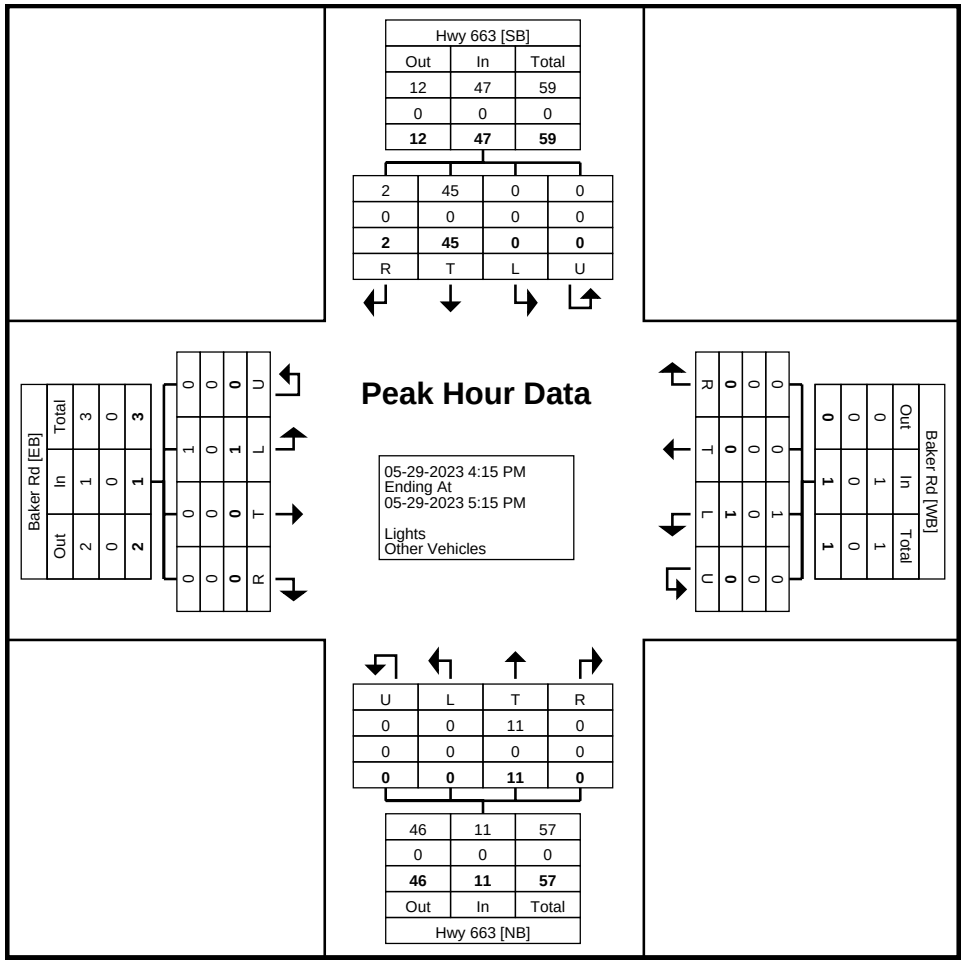

Turning Movement Peak Hour Data Plot (4:15 PM)

Stantec Consulting Ltd.
300 - 1919 Rose St

Regina, Saskatchewan, Canada S4P 3P1
306 781 6400 erin.harms@stantec.com

Count Name: T5 (Baker Rd & Hwy 663)
Site Code:
Start Date: 05-29-2023

Turning Movement Peak Hour Data (8:00 AM)

Start Time	Hwy 663 Southbound					Baker Rd Westbound					Hwy 663 Northbound					Baker Rd Eastbound					
	Right	Thru	Left	U-Turn	App. Total	Right	Thru	Left	U-Turn	App. Total	Right	Thru	Left	U-Turn	App. Total	Right	Thru	Left	U-Turn	App. Total	Int. Total
8:00 AM	0	5	0	0	5	0	0	0	0	0	0	7	0	0	7	0	0	2	0	2	14
8:15 AM	0	1	1	0	2	0	0	0	0	0	0	11	0	0	11	0	0	1	0	1	14
8:30 AM	1	5	0	0	6	0	0	0	0	0	0	5	1	0	6	0	0	0	0	0	12
8:45 AM	2	3	0	0	5	0	0	0	0	0	0	5	0	0	5	0	0	0	0	0	10
Total	3	14	1	0	18	0	0	0	0	0	0	28	1	0	29	0	0	3	0	3	50
Approach %	16.7	77.8	5.6	0.0	-	0.0	0.0	0.0	0.0	-	0.0	96.6	3.4	0.0	-	0.0	0.0	100.0	0.0	-	-
Total %	6.0	28.0	2.0	0.0	36.0	0.0	0.0	0.0	0.0	0.0	0.0	56.0	2.0	0.0	58.0	0.0	0.0	6.0	0.0	6.0	-
PHF	0.375	0.700	0.250	0.000	0.750	0.000	0.000	0.000	0.000	0.000	0.000	0.636	0.250	0.000	0.659	0.000	0.000	0.375	0.000	0.375	0.893
Lights	2	13	1	0	16	0	0	0	0	0	0	27	1	0	28	0	0	3	0	3	47
% Lights	66.7	92.9	100.0	-	88.9	-	-	-	-	-	-	96.4	100.0	-	96.6	-	-	100.0	-	100.0	94.0
Other Vehicles	1	1	0	0	2	0	0	0	0	0	0	1	0	0	1	0	0	0	0	0	3
% Other Vehicles	33.3	7.1	0.0	-	11.1	-	-	-	-	-	-	3.6	0.0	-	3.4	-	-	0.0	-	0.0	6.0

Stantec Consulting Ltd.
300 - 1919 Rose St

Regina, Saskatchewan, Canada S4P 3P1
306 781 6400 erin.harms@stantec.com

Count Name: T5 (Baker Rd & Hwy 663)
Site Code:
Start Date: 05-29-2023

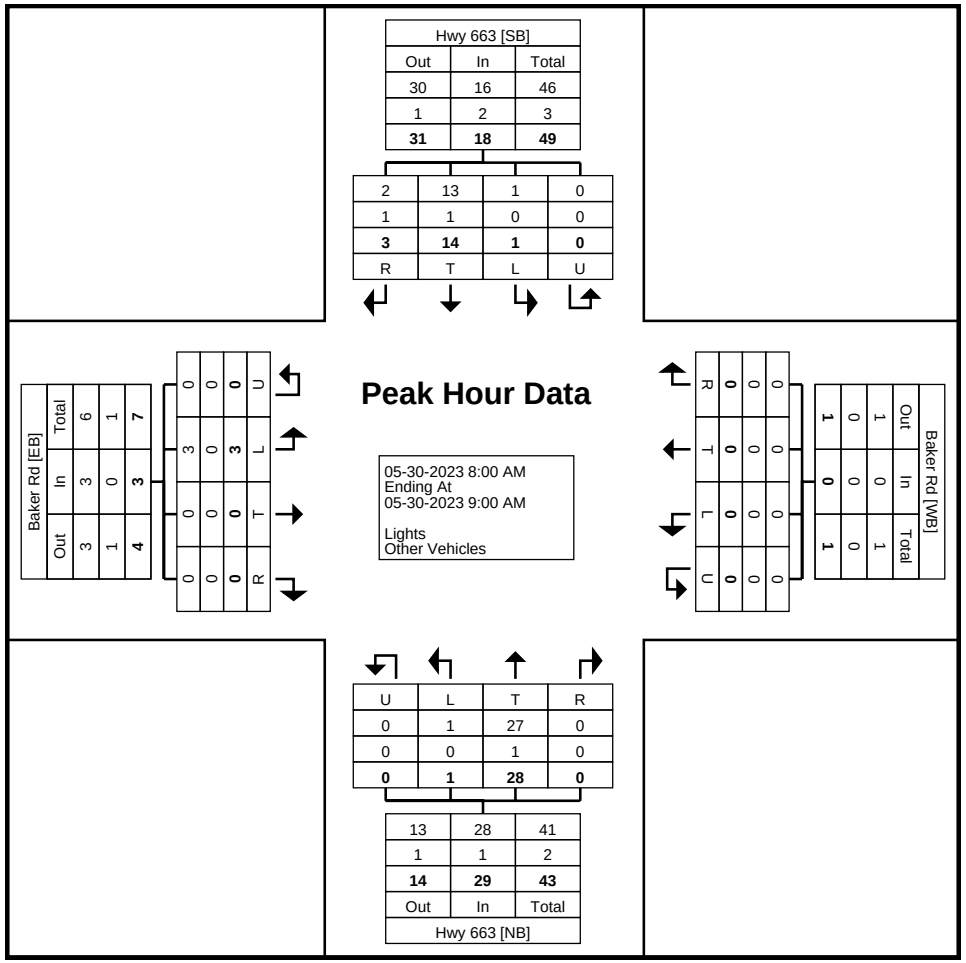

Turning Movement Peak Hour Data Plot (8:00 AM)

Stantec Consulting Ltd.
300 - 1919 Rose St

Regina, Saskatchewan, Canada S4P 3P1
306 781 6400 erin.harms@stantec.com

Count Name: T6 (Chases Bluff Rd & Tamke Rd)
Site Code:
Start Date: 05-30-2023

Turning Movement Data

Start Time	Chases Bluff Rd Southbound				Tamke Rd Westbound				Tamke Rd Eastbound				
	Right	Left	U-Turn	App. Total	Right	Thru	U-Turn	App. Total	Thru	Left	U-Turn	App. Total	Int. Total
11:45 AM	0	0	0	0	0	3	0	3	0	0	0	0	3
Hourly Total	0	0	0	0	0	3	0	3	0	0	0	0	3
12:00 PM	0	1	0	1	0	0	0	0	0	0	0	0	1
12:15 PM	0	0	0	0	1	0	0	1	0	0	0	0	1
12:30 PM	0	0	0	0	0	0	0	0	0	0	0	0	0
12:45 PM	0	0	0	0	0	1	0	1	1	0	0	1	2
Hourly Total	0	1	0	1	1	1	0	2	1	0	0	1	4
1:00 PM	1	0	0	1	1	1	0	2	0	1	0	1	4
1:15 PM	0	0	1	1	0	0	0	0	0	0	1	1	2
1:30 PM	0	0	0	0	0	0	0	0	0	0	0	0	0
1:45 PM	1	0	0	1	0	0	0	0	0	0	0	0	1
Hourly Total	2	0	1	3	1	1	0	2	0	1	1	2	7
2:00 PM	0	0	0	0	0	1	0	1	1	0	0	1	2
2:15 PM	0	0	0	0	0	0	0	0	2	0	1	3	3
2:30 PM	0	0	0	0	0	1	0	1	2	1	0	3	4
2:45 PM	0	0	1	1	0	1	0	1	0	0	0	0	2
Hourly Total	0	0	1	1	0	3	0	3	5	1	1	7	11
3:00 PM	3	0	0	3	0	0	0	0	0	0	0	0	3
3:15 PM	1	5	0	6	1	1	0	2	1	0	0	1	9
3:30 PM	1	2	0	3	1	2	0	3	0	0	0	0	6
3:45 PM	0	4	0	4	0	0	0	0	0	0	0	0	4
Hourly Total	5	11	0	16	2	3	0	5	1	0	0	1	22
4:00 PM	0	1	0	1	0	0	0	0	1	0	0	1	2
4:15 PM	1	1	0	2	1	0	0	1	2	0	0	2	5
4:30 PM	0	0	0	0	0	0	0	0	1	0	0	1	1
4:45 PM	1	2	0	3	0	1	0	1	0	0	0	0	4
Hourly Total	2	4	0	6	1	1	0	2	4	0	0	4	12
5:00 PM	0	0	0	0	0	0	0	0	2	0	0	2	2
5:15 PM	0	0	0	0	1	5	0	6	1	0	0	1	7
5:30 PM	0	1	0	1	0	0	0	0	0	0	0	0	1
5:45 PM	0	2	0	2	0	0	0	0	0	0	0	0	2
Hourly Total	0	3	0	3	1	5	0	6	3	0	0	3	12
6:00 PM	1	0	0	1	0	2	0	2	2	0	0	2	5
6:15 PM	0	0	0	0	0	1	0	1	0	0	0	0	1
6:30 PM	0	0	0	0	0	1	0	1	0	0	0	0	1
6:45 PM	0	0	0	0	0	0	0	0	1	0	0	1	1

Hourly Total	1	0	0	1	0	4	0	4	3	0	0	3	8
7:00 PM	0	0	0	0	0	0	0	0	2	1	0	3	3
7:15 PM	0	1	0	1	0	0	0	0	1	0	0	1	2
7:30 PM	0	0	0	0	1	0	0	1	0	1	0	1	2
7:45 PM	0	0	0	0	0	0	0	0	0	0	0	0	0
Hourly Total	0	1	0	1	1	0	0	1	3	2	0	5	7
8:00 PM	0	1	0	1	0	0	0	0	0	0	0	0	1
8:15 PM	0	0	0	0	0	0	0	0	1	0	0	1	1
8:30 PM	0	0	0	0	0	0	0	0	2	0	0	2	2
8:45 PM	0	0	0	0	0	1	0	1	0	0	0	0	1
Hourly Total	0	1	0	1	0	1	0	1	3	0	0	3	5
9:00 PM	0	1	0	1	0	0	0	0	0	0	0	0	1
9:15 PM	0	0	0	0	0	0	0	0	0	0	0	0	0
9:30 PM	0	0	0	0	0	0	0	0	0	0	0	0	0
9:45 PM	0	0	0	0	0	0	0	0	0	0	0	0	0
Hourly Total	0	1	0	1	0	0	0	0	0	0	0	0	1
10:00 PM	0	1	0	1	0	0	0	0	0	1	0	1	2
10:15 PM	0	0	0	0	0	0	0	0	0	0	0	0	0
10:30 PM	0	0	0	0	0	0	0	0	0	0	0	0	0
10:45 PM	0	0	0	0	0	0	0	0	0	0	0	0	0
Hourly Total	0	1	0	1	0	0	0	0	0	1	0	1	2
11:00 PM	0	0	0	0	0	0	0	0	0	0	0	0	0
11:15 PM	0	0	0	0	0	0	0	0	0	0	0	0	0
11:30 PM	0	0	0	0	0	0	0	0	1	0	0	1	1
11:45 PM	0	0	0	0	0	0	0	0	0	0	0	0	0
Hourly Total	0	0	0	0	0	0	0	0	1	0	0	1	1
12:00 AM	0	0	0	0	0	0	0	0	0	0	0	0	0
12:15 AM	0	0	0	0	0	0	0	0	0	0	0	0	0
12:30 AM	0	0	0	0	0	0	0	0	0	0	0	0	0
12:45 AM	0	0	0	0	0	0	0	0	0	0	0	0	0
Hourly Total	0	0	0	0	0	0	0	0	0	0	0	0	0
1:00 AM	0	0	0	0	0	0	0	0	0	0	0	0	0
1:15 AM	0	0	0	0	0	0	0	0	0	0	0	0	0
1:30 AM	0	0	0	0	0	0	0	0	0	0	0	0	0
1:45 AM	0	0	0	0	0	0	0	0	0	0	0	0	0
Hourly Total	0	0	0	0	0	0	0	0	0	0	0	0	0
2:00 AM	0	0	0	0	0	0	0	0	0	0	0	0	0
2:15 AM	0	0	0	0	0	0	0	0	0	0	0	0	0
2:30 AM	0	0	0	0	0	0	0	0	0	0	0	0	0
2:45 AM	0	0	0	0	0	0	0	0	0	0	0	0	0
Hourly Total	0	0	0	0	0	0	0	0	0	0	0	0	0
3:00 AM	0	0	0	0	0	0	0	0	0	0	0	0	0
3:15 AM	0	0	0	0	0	0	0	0	0	0	0	0	0
3:30 AM	0	0	0	0	0	0	0	0	0	0	0	0	0
3:45 AM	0	0	0	0	0	0	0	0	0	0	0	0	0
Hourly Total	0	0	0	0	0	0	0	0	0	0	0	0	0
4:00 AM	0	0	0	0	0	0	0	0	0	0	0	0	0
4:15 AM	0	0	0	0	0	0	0	0	0	0	0	0	0
4:30 AM	0	0	0	0	0	0	0	0	0	0	0	0	0
4:45 AM	0	0	0	0	0	0	0	0	0	0	0	0	0
Hourly Total	0	0	0	0	0	0	0	0	0	0	0	0	0
5:00 AM	0	0	0	0	1	0	0	1	0	0	0	0	1

5:15 AM	0	0	0	0	0	0	0	0	1	0	0	1	1
5:30 AM	0	0	0	0	0	1	0	1	0	0	0	0	1
5:45 AM	0	0	0	0	0	0	0	0	1	0	0	1	1
Hourly Total	0	0	0	0	1	1	0	2	2	0	0	2	4
6:00 AM	0	0	0	0	0	0	0	0	0	0	0	0	0
6:15 AM	0	0	0	0	1	0	0	1	5	1	0	6	7
6:30 AM	0	0	0	0	0	2	0	2	0	0	0	0	2
6:45 AM	0	0	0	0	0	1	0	1	1	0	0	1	2
Hourly Total	0	0	0	0	1	3	0	4	6	1	0	7	11
7:00 AM	0	0	0	0	0	0	0	0	0	0	0	0	0
7:15 AM	0	1	0	1	0	2	0	2	0	0	0	0	3
7:30 AM	0	0	0	0	0	0	0	0	3	0	0	3	3
7:45 AM	0	0	0	0	1	0	0	1	0	0	0	0	1
Hourly Total	0	1	0	1	1	2	0	3	3	0	0	3	7
8:00 AM	0	0	0	0	0	1	0	1	0	1	0	1	2
8:15 AM	0	0	0	0	1	0	0	1	0	3	0	3	4
8:30 AM	1	0	0	1	0	1	0	1	1	3	0	4	6
8:45 AM	0	0	0	0	1	2	0	3	0	0	0	0	3
Hourly Total	1	0	0	1	2	4	0	6	1	7	0	8	15
9:00 AM	0	0	0	0	0	0	0	0	0	0	0	0	0
9:15 AM	0	0	0	0	0	1	0	1	1	0	0	1	2
9:30 AM	0	1	0	1	1	1	0	2	1	1	0	2	5
9:45 AM	0	1	0	1	0	0	0	0	1	0	0	1	2
Hourly Total	0	2	0	2	1	2	0	3	3	1	0	4	9
10:00 AM	0	0	0	0	0	0	0	0	0	0	0	0	0
10:15 AM	0	0	0	0	0	1	0	1	0	0	0	0	1
10:30 AM	0	0	0	0	0	0	0	0	1	0	0	1	1
10:45 AM	0	0	0	0	1	0	0	1	0	0	0	0	1
Hourly Total	0	0	0	0	1	1	0	2	1	0	0	1	3
11:00 AM	1	0	0	1	0	1	0	1	1	0	0	1	3
11:15 AM	0	1	0	1	0	1	0	1	1	0	0	1	3
11:30 AM	0	0	0	0	1	0	0	1	0	0	0	0	1
Grand Total	12	27	2	41	15	37	0	52	42	14	2	58	151
Approach %	29.3	65.9	4.9	-	28.8	71.2	0.0	-	72.4	24.1	3.4	-	-
Total %	7.9	17.9	1.3	27.2	9.9	24.5	0.0	34.4	27.8	9.3	1.3	38.4	-
Lights	11	24	0	35	15	35	0	50	39	12	1	52	137
% Lights	91.7	88.9	0.0	85.4	100.0	94.6	-	96.2	92.9	85.7	50.0	89.7	90.7
Other Vehicles	1	3	2	6	0	2	0	2	3	2	1	6	14
% Other Vehicles	8.3	11.1	100.0	14.6	0.0	5.4	-	3.8	7.1	14.3	50.0	10.3	9.3

Stantec Consulting Ltd.
300 - 1919 Rose St

Regina, Saskatchewan, Canada S4P 3P1
306 781 6400 erin.harms@stantec.com

Count Name: T6 (Chases Bluff Rd & Tamke Rd)
Site Code:
Start Date: 05-30-2023

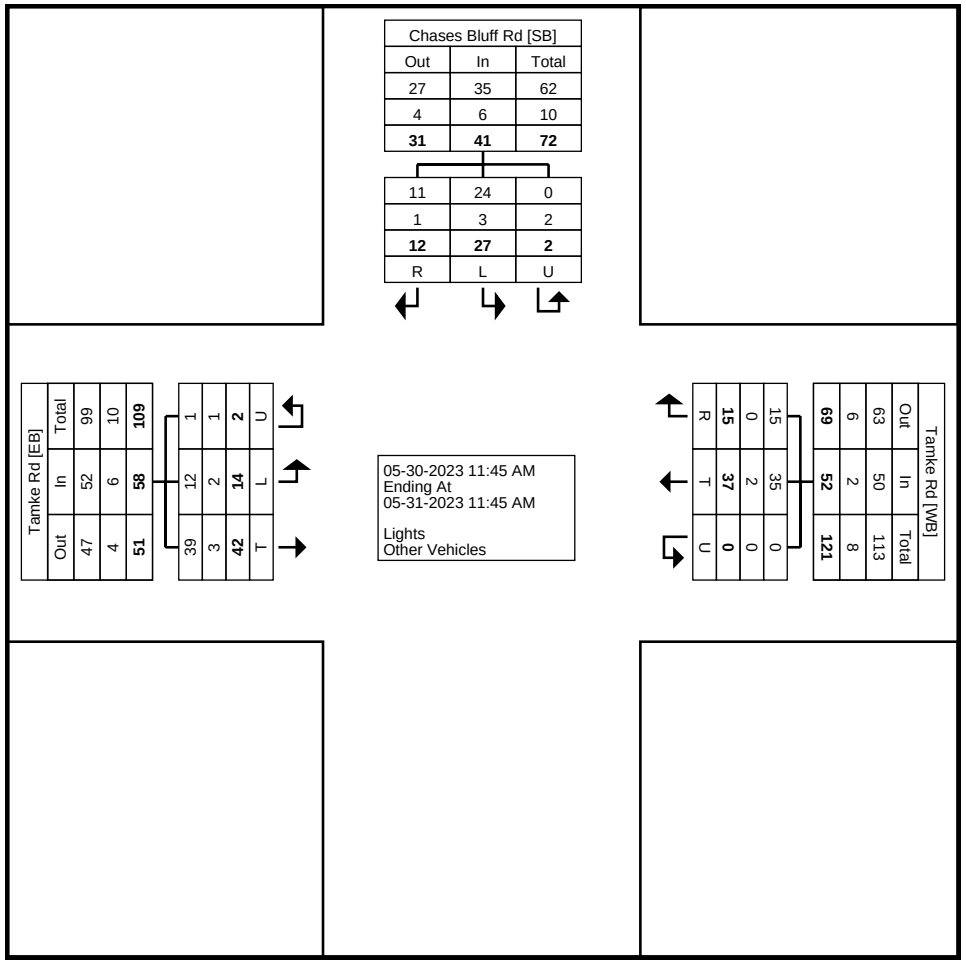

Turning Movement Data Plot

Stantec Consulting Ltd.
300 - 1919 Rose St

Regina, Saskatchewan, Canada S4P 3P1
306 781 6400 erin.harms@stantec.com

Count Name: T6 (Chases Bluff Rd & Tamke Rd)
Site Code:
Start Date: 05-30-2023

Turning Movement Peak Hour Data (3:00 PM)

Start Time	Chases Bluff Rd Southbound				Tamke Rd Westbound				Tamke Rd Eastbound				
	Right	Left	U-Turn	App. Total	Right	Thru	U-Turn	App. Total	Thru	Left	U-Turn	App. Total	Int. Total
3:00 PM	3	0	0	3	0	0	0	0	0	0	0	0	3
3:15 PM	1	5	0	6	1	1	0	2	1	0	0	1	9
3:30 PM	1	2	0	3	1	2	0	3	0	0	0	0	6
3:45 PM	0	4	0	4	0	0	0	0	0	0	0	0	4
Total	5	11	0	16	2	3	0	5	1	0	0	1	22
Approach %	31.3	68.8	0.0	-	40.0	60.0	0.0	-	100.0	0.0	0.0	-	-
Total %	22.7	50.0	0.0	72.7	9.1	13.6	0.0	22.7	4.5	0.0	0.0	4.5	-
PHF	0.417	0.550	0.000	0.667	0.500	0.375	0.000	0.417	0.250	0.000	0.000	0.250	0.611
Lights	5	9	0	14	2	3	0	5	1	0	0	1	20
% Lights	100.0	81.8	-	87.5	100.0	100.0	-	100.0	100.0	-	-	100.0	90.9
Other Vehicles	0	2	0	2	0	0	0	0	0	0	0	0	2
% Other Vehicles	0.0	18.2	-	12.5	0.0	0.0	-	0.0	0.0	-	-	0.0	9.1

Stantec Consulting Ltd.
300 - 1919 Rose St

Regina, Saskatchewan, Canada S4P 3P1
306 781 6400 erin.harms@stantec.com

Count Name: T6 (Chases Bluff Rd & Tamke Rd)
Site Code:
Start Date: 05-30-2023
Page No: 6

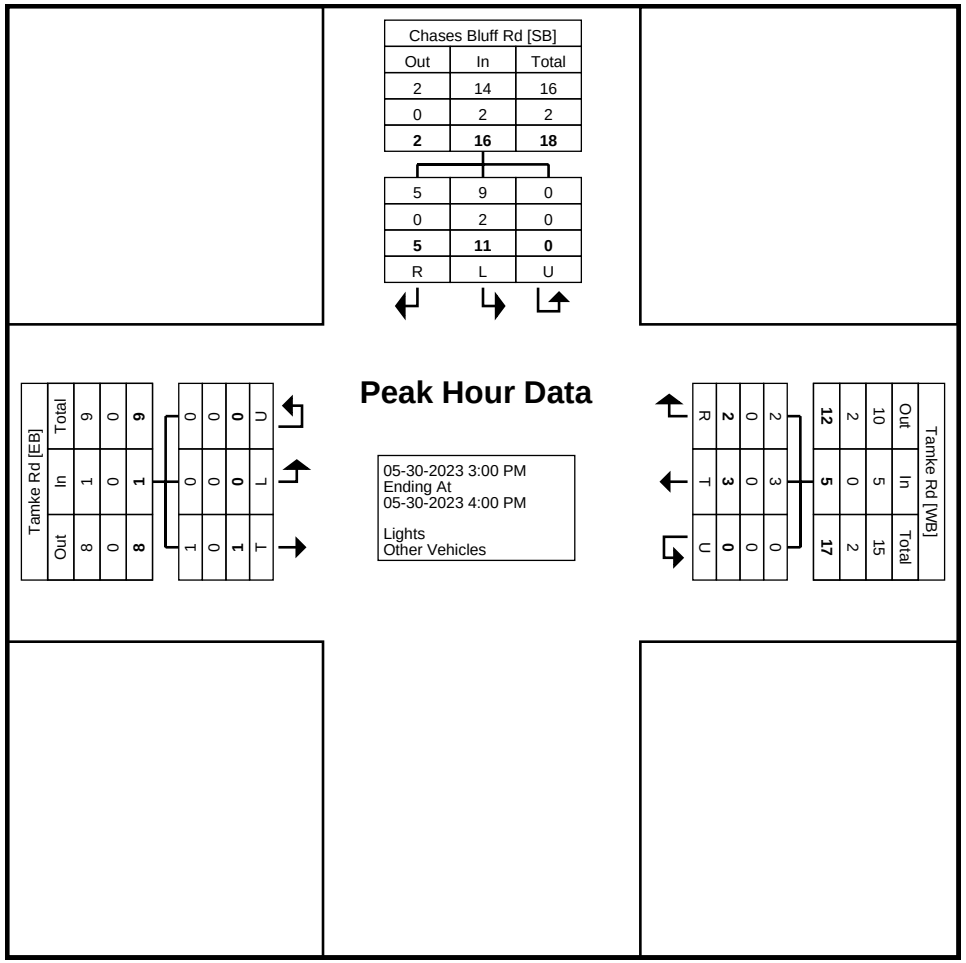

Turning Movement Peak Hour Data Plot (3:00 PM)

Stantec Consulting Ltd.
300 - 1919 Rose St

Regina, Saskatchewan, Canada S4P 3P1
306 781 6400 erin.harms@stantec.com

Count Name: T6 (Chases Bluff Rd & Tamke Rd)
Site Code:
Start Date: 05-30-2023

Turning Movement Peak Hour Data (8:00 AM)

Start Time	Chases Bluff Rd Southbound				Tamke Rd Westbound				Tamke Rd Eastbound				
	Right	Left	U-Turn	App. Total	Right	Thru	U-Turn	App. Total	Thru	Left	U-Turn	App. Total	Int. Total
8:00 AM	0	0	0	0	0	1	0	1	0	1	0	1	2
8:15 AM	0	0	0	0	1	0	0	1	0	3	0	3	4
8:30 AM	1	0	0	1	0	1	0	1	1	3	0	4	6
8:45 AM	0	0	0	0	1	2	0	3	0	0	0	0	3
Total	1	0	0	1	2	4	0	6	1	7	0	8	15
Approach %	100.0	0.0	0.0	-	33.3	66.7	0.0	-	12.5	87.5	0.0	-	-
Total %	6.7	0.0	0.0	6.7	13.3	26.7	0.0	40.0	6.7	46.7	0.0	53.3	-
PHF	0.250	0.000	0.000	0.250	0.500	0.500	0.000	0.500	0.250	0.583	0.000	0.500	0.625
Lights	0	0	0	0	2	4	0	6	1	6	0	7	13
% Lights	0.0	-	-	0.0	100.0	100.0	-	100.0	100.0	85.7	-	87.5	86.7
Other Vehicles	1	0	0	1	0	0	0	0	0	1	0	1	2
% Other Vehicles	100.0	-	-	100.0	0.0	0.0	-	0.0	0.0	14.3	-	12.5	13.3

Stantec Consulting Ltd.
300 - 1919 Rose St

Regina, Saskatchewan, Canada S4P 3P1
306 781 6400 erin.harms@stantec.com

Count Name: T6 (Chases Bluff Rd & Tamke Rd)
Site Code:
Start Date: 05-30-2023

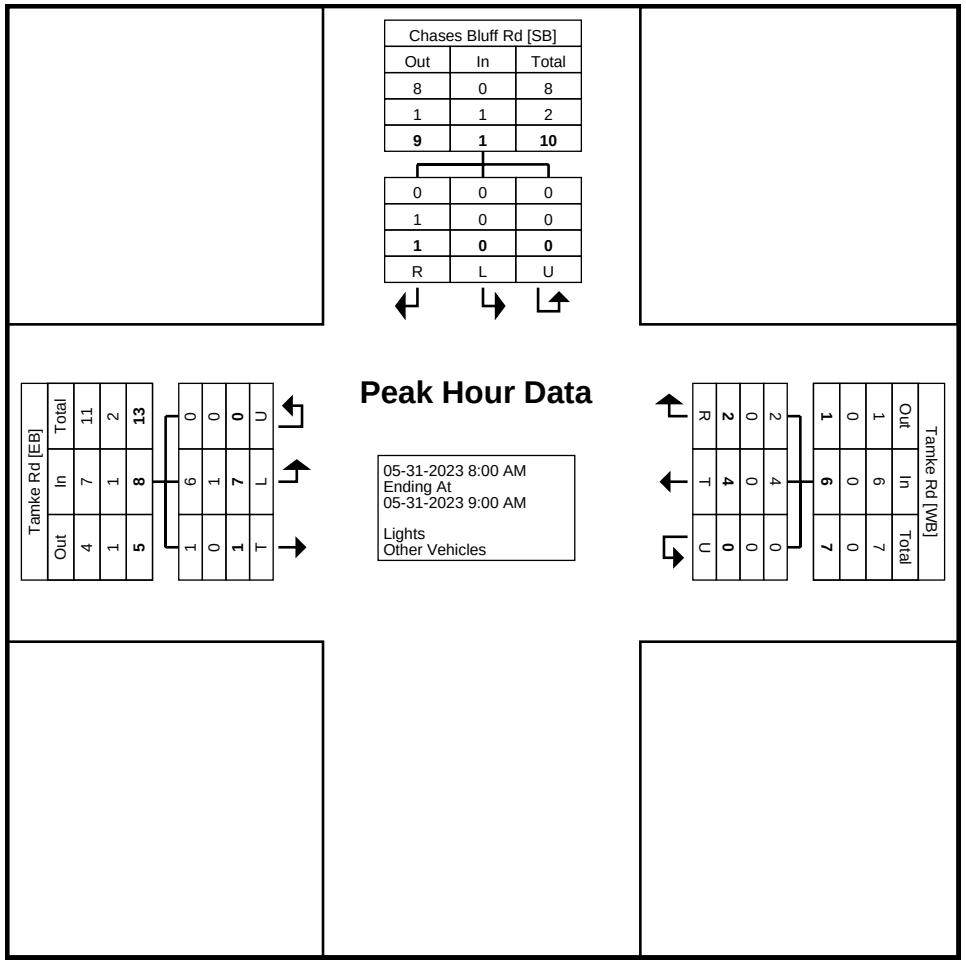

Turning Movement Peak Hour Data Plot (8:00 AM)

Stantec Consulting Ltd.
300 - 1919 Rose St

Regina, Saskatchewan, Canada S4P 3P1
306 781 6400 erin.harms@stantec.com

Count Name: T7 (Melness Rd & Winmill Rd)
Site Code:
Start Date: 05-29-2023

Turning Movement Data

Start Time	Winmill Rd Southbound					Melness Rd Westbound					Winmill Rd Northbound					Melness Rd Eastbound					
	Right	Thru	Left	U-Turn	App. Total	Right	Thru	Left	U-Turn	App. Total	Right	Thru	Left	U-Turn	App. Total	Right	Thru	Left	U-Turn	App. Total	Int. Total
10:45 AM	0	0	0	0	0	0	1	1	0	2	0	0	1	0	1	0	2	0	0	2	5
Hourly Total	0	0	0	0	0	0	1	1	0	2	0	0	1	0	1	0	2	0	0	2	5
11:00 AM	0	1	0	0	1	0	1	0	0	1	0	0	3	0	3	0	1	1	0	2	7
11:15 AM	0	0	0	0	0	0	2	0	0	2	0	1	1	0	2	0	0	0	0	0	4
11:30 AM	0	0	0	0	0	0	2	0	0	2	0	1	0	0	1	0	1	0	0	1	4
11:45 AM	0	0	0	0	0	0	1	0	0	1	0	0	0	0	0	0	1	0	0	1	2
Hourly Total	0	1	0	0	1	0	6	0	0	6	0	2	4	0	6	0	3	1	0	4	17
12:00 PM	0	0	0	0	0	0	0	0	0	0	0	0	0	0	0	0	2	1	0	3	3
12:15 PM	0	0	0	0	0	0	2	0	0	2	0	0	0	0	0	1	3	0	0	4	6
12:30 PM	0	0	0	0	0	0	3	0	0	3	0	0	1	0	1	0	1	0	0	1	5
12:45 PM	0	0	0	0	0	0	0	0	0	0	0	0	0	0	0	0	1	0	0	1	1
Hourly Total	0	0	0	0	0	0	5	0	0	5	0	0	1	0	1	1	7	1	0	9	15
1:00 PM	0	0	0	0	0	0	0	0	0	0	0	0	0	0	0	1	6	0	0	7	7
1:15 PM	0	0	0	0	0	0	4	0	0	4	0	0	0	0	0	0	1	0	0	1	5
1:30 PM	0	0	1	0	1	0	0	0	0	0	0	0	1	0	1	1	0	0	0	1	3
1:45 PM	0	0	0	0	0	0	2	0	0	2	0	0	1	0	1	0	1	0	0	1	4
Hourly Total	0	0	1	0	1	0	6	0	0	6	0	0	2	0	2	2	8	0	0	10	19
2:00 PM	1	0	0	0	1	0	0	0	0	0	0	0	0	0	0	1	1	1	0	3	4
2:15 PM	0	0	0	0	0	0	0	0	0	0	0	0	1	0	1	0	1	0	0	1	2
2:30 PM	0	0	0	0	0	0	4	0	0	4	0	0	1	0	1	0	1	0	0	1	6
2:45 PM	0	0	0	0	0	0	3	0	0	3	0	0	1	0	1	0	1	0	0	1	5
Hourly Total	1	0	0	0	1	0	7	0	0	7	0	0	3	0	3	1	4	1	0	6	17
3:00 PM	0	0	0	0	0	0	0	0	0	0	0	0	0	0	0	0	2	0	0	2	2
3:15 PM	0	0	0	0	0	0	6	0	0	6	0	0	0	0	0	0	1	0	0	1	7
3:30 PM	0	0	0	0	0	1	2	0	0	3	0	0	1	0	1	0	2	0	0	2	6
3:45 PM	0	0	0	0	0	0	2	0	0	2	0	0	0	0	0	0	1	0	0	1	3
Hourly Total	0	0	0	0	0	1	10	0	0	11	0	0	1	0	1	0	6	0	0	6	18
4:00 PM	0	0	0	0	0	0	2	0	0	2	0	0	0	0	0	2	2	0	0	4	6
4:15 PM	0	0	0	0	0	0	2	0	0	2	0	0	2	0	2	1	1	0	0	2	6
4:30 PM	0	0	0	0	0	0	0	0	0	0	0	0	0	0	0	0	4	1	0	5	5
4:45 PM	0	0	0	0	0	0	3	1	0	4	0	0	1	0	1	3	3	0	0	6	11
Hourly Total	0	0	0	0	0	0	7	1	0	8	0	0	3	0	3	6	10	1	0	17	28
5:00 PM	0	0	0	0	0	0	1	0	0	1	0	0	0	0	0	1	3	0	0	4	5
5:15 PM	0	0	0	0	0	0	1	1	0	2	0	0	0	0	0	1	1	1	0	3	5
5:30 PM	0	0	0	0	0	0	2	0	0	2	0	0	0	0	0	0	2	0	0	2	4
5:45 PM	0	0	0	0	0	0	0	0	0	0	0	0	0	0	0	0	0	0	0	0	0

Hourly Total	0	0	0	0	0	0	4	1	0	5	0	0	0	0	0	2	6	1	0	9	14
6:00 PM	0	0	0	0	0	0	2	0	0	2	0	0	0	0	0	0	0	0	0	0	2
6:15 PM	0	0	0	0	0	0	0	0	0	0	0	0	1	0	1	0	0	0	0	0	1
6:30 PM	0	0	1	0	1	1	0	0	0	1	0	0	0	0	0	0	1	0	0	1	3
6:45 PM	0	0	0	0	0	0	2	0	0	2	0	0	0	0	0	0	0	0	0	0	2
Hourly Total	0	0	1	0	1	1	4	0	0	5	0	0	1	0	1	0	1	0	0	1	8
7:00 PM	0	1	0	0	1	0	1	0	0	1	0	0	2	0	2	1	1	0	0	2	6
7:15 PM	0	0	0	0	0	0	0	0	0	0	0	0	0	0	0	0	0	0	0	0	0
7:30 PM	0	0	0	0	0	1	3	0	0	4	0	0	0	0	0	1	2	0	0	3	7
7:45 PM	0	1	0	0	1	0	0	0	0	0	0	0	0	0	0	1	0	0	0	1	2
Hourly Total	0	2	0	0	2	1	4	0	0	5	0	0	2	0	2	3	3	0	0	6	15
8:00 PM	0	0	0	0	0	1	0	0	0	1	0	0	0	0	0	2	4	0	0	6	7
8:15 PM	0	0	0	0	0	0	1	0	0	1	0	0	2	0	2	0	2	0	0	2	5
8:30 PM	0	1	0	0	1	0	0	0	0	0	0	0	1	0	1	0	0	0	0	0	2
8:45 PM	0	0	0	0	0	0	1	0	0	1	0	0	0	0	0	1	1	0	0	2	3
Hourly Total	0	1	0	0	1	1	2	0	0	3	0	0	3	0	3	3	7	0	0	10	17
9:00 PM	1	0	0	0	1	0	1	0	0	1	0	0	0	0	0	0	0	0	0	0	2
9:15 PM	0	0	0	0	0	0	1	0	0	1	0	0	0	0	0	0	0	1	0	1	2
9:30 PM	0	0	0	0	0	0	0	0	0	0	0	0	0	0	0	0	1	0	0	1	1
9:45 PM	0	0	0	0	0	0	0	0	0	0	0	0	0	0	0	0	1	0	0	1	1
Hourly Total	1	0	0	0	1	0	2	0	0	2	0	0	0	0	0	0	2	1	0	3	6
10:00 PM	0	0	0	0	0	1	0	0	0	1	0	0	0	0	0	0	1	1	0	2	3
10:15 PM	0	0	0	0	0	0	0	0	0	0	0	0	0	0	0	0	0	0	0	0	0
10:30 PM	0	0	0	0	0	0	0	0	0	0	0	0	0	0	0	0	0	0	0	0	0
10:45 PM	0	0	0	0	0	0	1	0	0	1	0	0	0	0	0	0	0	0	0	0	1
Hourly Total	0	0	0	0	0	1	1	0	0	2	0	0	0	0	0	0	1	1	0	2	4
11:00 PM	0	0	0	0	0	0	0	0	0	0	0	0	0	0	0	0	0	0	0	0	0
11:15 PM	0	0	0	0	0	0	0	0	0	0	0	0	0	0	0	0	0	0	0	0	0
11:30 PM	0	0	0	0	0	0	0	0	0	0	0	0	0	0	0	0	0	0	0	0	0
11:45 PM	0	0	0	0	0	0	0	0	0	0	0	0	0	0	0	0	0	0	0	0	0
Hourly Total	0	0	0	0	0	0	0	0	0	0	0	0	0	0	0	0	0	0	0	0	0
12:00 AM	0	0	0	0	0	0	0	0	0	0	0	0	0	0	0	0	0	0	0	0	0
12:15 AM	0	0	0	0	0	0	0	0	0	0	0	0	0	0	0	0	1	0	0	1	1
12:30 AM	0	0	0	0	0	0	0	0	0	0	0	0	0	0	0	0	0	0	0	0	0
12:45 AM	0	0	0	0	0	0	0	0	0	0	0	0	0	0	0	0	0	0	0	0	0
Hourly Total	0	0	0	0	0	0	0	0	0	0	0	0	0	0	0	0	1	0	0	1	1
1:00 AM	0	0	0	0	0	0	0	0	0	0	0	0	0	0	0	0	0	0	0	0	0
1:15 AM	0	0	0	0	0	0	0	0	0	0	0	0	0	0	0	0	0	0	0	0	0
1:30 AM	0	0	0	0	0	0	0	0	0	0	0	0	0	0	0	0	0	0	0	0	0
1:45 AM	0	0	0	0	0	0	0	0	0	0	0	0	0	0	0	0	0	0	0	0	0
Hourly Total	0	0	0	0	0	0	0	0	0	0	0	0	0	0	0	0	0	0	0	0	0
2:00 AM	0	0	0	0	0	0	0	0	0	0	0	0	0	0	0	0	0	0	0	0	0
2:15 AM	0	0	0	0	0	0	0	0	0	0	0	0	0	0	0	0	0	0	0	0	0
2:30 AM	0	0	0	0	0	0	0	0	0	0	0	0	0	0	0	0	0	0	0	0	0
2:45 AM	0	0	0	0	0	0	0	0	0	0	0	0	0	0	0	0	0	0	0	0	0
Hourly Total	0	0	0	0	0	0	0	0	0	0	0	0	0	0	0	0	0	0	0	0	0
3:00 AM	0	0	0	0	0	0	0	0	0	0	0	0	0	0	0	0	0	0	0	0	0
3:15 AM	0	0	0	0	0	0	0	0	0	0	0	0	0	0	0	0	0	0	0	0	0
3:30 AM	0	0	0	0	0	0	0	0	0	0	0	0	0	0	0	0	0	0	0	0	0
3:45 AM	0	0	0	0	0	0	0	0	0	0	0	0	0	0	0	0	0	0	0	0	0
Hourly Total	0	0	0	0	0	0	0	0	0	0	0	0	0	0	0	0	0	0	0	0	0
4:00 AM	0	0	0	0	0	0	0	0	0	0	0	0	0	0	0	0	0	0	0	0	0

4:15 AM	0	0	0	0	0	0	0	0	0	0	0	0	0	0	0	0	0	0	0	0	0
4:30 AM	0	0	0	0	0	0	0	0	0	0	0	0	0	0	0	0	1	0	0	1	1
4:45 AM	0	0	0	0	0	0	0	0	0	0	0	0	0	0	0	0	1	0	0	1	1
Hourly Total	0	0	0	0	0	0	0	0	0	0	0	0	0	0	0	0	2	0	0	2	2
5:00 AM	0	0	0	0	0	0	0	0	0	0	0	0	0	0	0	0	0	0	0	0	0
5:15 AM	0	0	0	0	0	0	0	0	0	0	0	0	0	0	0	0	2	0	0	2	2
5:30 AM	0	0	0	0	0	0	0	0	0	0	0	0	0	0	0	0	0	0	0	0	0
5:45 AM	0	0	0	0	0	0	0	0	0	0	0	0	1	0	1	0	0	0	0	0	1
Hourly Total	0	0	0	0	0	0	0	0	0	0	0	0	1	0	1	0	2	0	0	2	3
6:00 AM	0	0	0	0	0	0	0	0	0	0	0	0	1	0	1	0	1	0	0	1	2
6:15 AM	0	0	0	0	0	0	1	0	0	1	0	0	1	0	1	0	1	0	0	1	3
6:30 AM	0	0	0	0	0	0	1	0	0	1	0	0	0	0	0	0	0	0	0	0	1
6:45 AM	0	0	0	0	0	0	3	0	0	3	0	0	0	0	0	0	2	0	0	2	5
Hourly Total	0	0	0	0	0	0	5	0	0	5	0	0	2	0	2	0	4	0	0	4	11
7:00 AM	0	0	0	0	0	0	2	0	0	2	0	0	0	0	0	0	1	0	0	1	3
7:15 AM	0	0	0	0	0	0	1	0	0	1	0	0	0	0	0	0	0	1	0	1	2
7:30 AM	0	0	0	0	0	1	2	0	0	3	0	0	0	0	0	0	0	0	0	0	3
7:45 AM	0	0	0	0	0	0	2	0	0	2	0	0	0	0	0	0	1	0	0	1	3
Hourly Total	0	0	0	0	0	1	7	0	0	8	0	0	0	0	0	0	2	1	0	3	11
8:00 AM	0	0	0	0	0	0	3	1	0	4	0	0	1	0	1	0	1	0	0	1	6
8:15 AM	0	0	0	0	0	0	2	0	0	2	1	0	2	0	3	0	1	0	0	1	6
8:30 AM	1	0	0	0	1	0	2	0	0	2	0	0	0	0	0	0	5	1	0	6	9
8:45 AM	0	0	0	0	0	0	2	0	0	2	0	0	1	0	1	0	1	0	0	1	4
Hourly Total	1	0	0	0	1	0	9	1	0	10	1	0	4	0	5	0	8	1	0	9	25
9:00 AM	0	0	0	0	0	0	3	0	0	3	0	0	0	0	0	1	1	0	0	2	5
9:15 AM	1	0	0	0	1	0	0	0	0	0	0	0	0	0	0	0	1	0	0	1	2
9:30 AM	0	1	0	0	1	0	0	0	0	0	0	0	1	0	1	0	3	1	0	4	6
9:45 AM	0	0	0	0	0	0	0	0	0	0	0	0	1	0	1	2	1	0	0	3	4
Hourly Total	1	1	0	0	2	0	3	0	0	3	0	0	2	0	2	3	6	1	0	10	17
10:00 AM	0	0	0	0	0	0	2	0	0	2	0	0	0	0	0	0	2	0	0	2	4
10:15 AM	0	0	0	0	0	0	1	0	0	1	0	0	0	0	0	0	0	0	0	0	1
10:30 AM	1	0	0	0	1	0	1	0	0	1	0	0	0	0	0	0	2	0	0	2	4
Grand Total	5	5	2	0	12	6	87	4	0	97	1	2	30	0	33	21	89	10	0	120	262
Approach %	41.7	41.7	16.7	0.0	-	6.2	89.7	4.1	0.0	-	3.0	6.1	90.9	0.0	-	17.5	74.2	8.3	0.0	-	-
Total %	1.9	1.9	0.8	0.0	4.6	2.3	33.2	1.5	0.0	37.0	0.4	0.8	11.5	0.0	12.6	8.0	34.0	3.8	0.0	45.8	-
Lights	5	5	1	0	11	5	79	3	0	87	1	2	30	0	33	21	86	10	0	117	248
% Lights	100.0	100.0	50.0	-	91.7	83.3	90.8	75.0	-	89.7	100.0	100.0	100.0	-	100.0	100.0	96.6	100.0	-	97.5	94.7
Other Vehicles	0	0	1	0	1	1	8	1	0	10	0	0	0	0	0	0	3	0	0	3	14
% Other Vehicles	0.0	0.0	50.0	-	8.3	16.7	9.2	25.0	-	10.3	0.0	0.0	0.0	-	0.0	0.0	3.4	0.0	-	2.5	5.3

Stantec Consulting Ltd.
300 - 1919 Rose St

Regina, Saskatchewan, Canada S4P 3P1
306 781 6400 erin.harms@stantec.com

Count Name: T7 (Melness Rd & Winmill Rd)
Site Code:
Start Date: 05-29-2023
Page No: 4

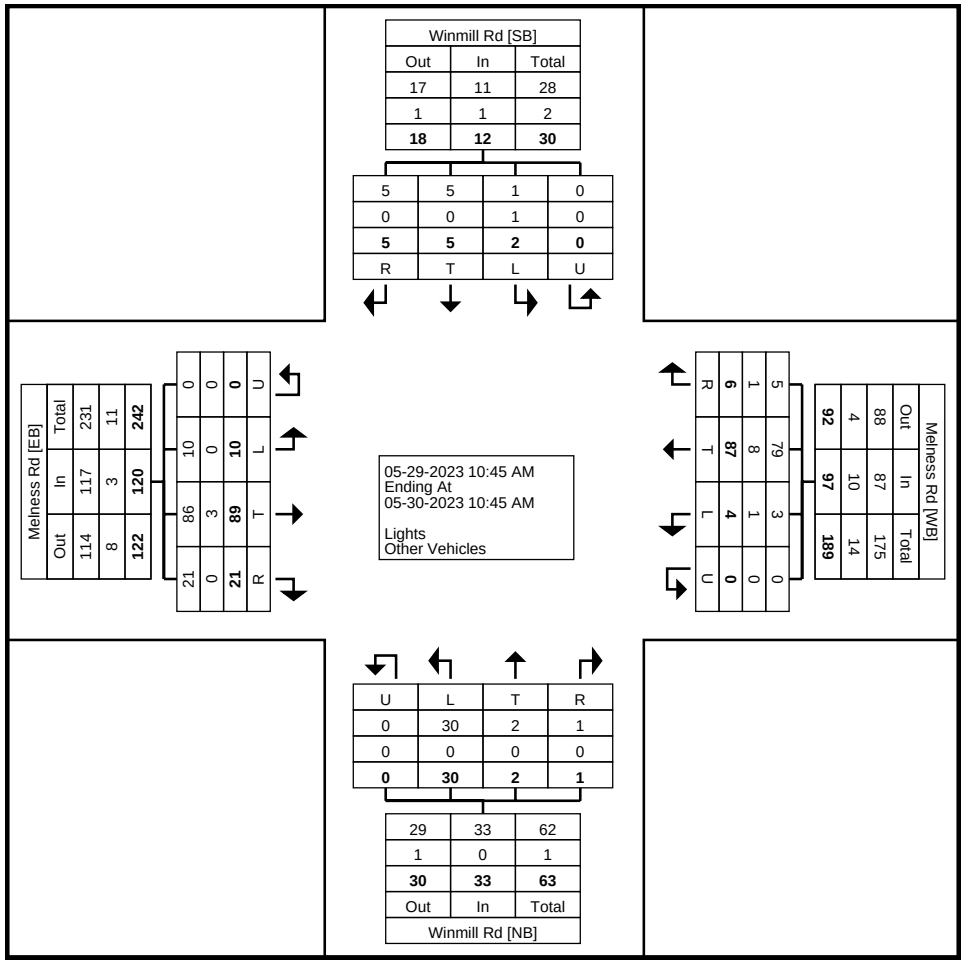

Turning Movement Data Plot

Stantec Consulting Ltd.
300 - 1919 Rose St

Regina, Saskatchewan, Canada S4P 3P1
306 781 6400 erin.harms@stantec.com

Count Name: T7 (Melness Rd & Winmill Rd)
Site Code:
Start Date: 05-29-2023

Turning Movement Peak Hour Data (10:45 AM)

Start Time	Winmill Rd Southbound					Melness Rd Westbound					Winmill Rd Northbound					Melness Rd Eastbound					
	Right	Thru	Left	U-Turn	App. Total	Right	Thru	Left	U-Turn	App. Total	Right	Thru	Left	U-Turn	App. Total	Right	Thru	Left	U-Turn	App. Total	Int. Total
10:45 AM	0	0	0	0	0	0	1	1	0	2	0	0	1	0	1	0	2	0	0	2	5
11:00 AM	0	1	0	0	1	0	1	0	0	1	0	0	3	0	3	0	1	1	0	2	7
11:15 AM	0	0	0	0	0	0	2	0	0	2	0	1	1	0	2	0	0	0	0	0	4
11:30 AM	0	0	0	0	0	0	2	0	0	2	0	1	0	0	1	0	1	0	0	1	4
Total	0	1	0	0	1	0	6	1	0	7	0	2	5	0	7	0	4	1	0	5	20
Approach %	0.0	100.0	0.0	0.0	-	0.0	85.7	14.3	0.0	-	0.0	28.6	71.4	0.0	-	0.0	80.0	20.0	0.0	-	-
Total %	0.0	5.0	0.0	0.0	5.0	0.0	30.0	5.0	0.0	35.0	0.0	10.0	25.0	0.0	35.0	0.0	20.0	5.0	0.0	25.0	-
PHF	0.000	0.250	0.000	0.000	0.250	0.000	0.750	0.250	0.000	0.875	0.000	0.500	0.417	0.000	0.583	0.000	0.500	0.250	0.000	0.625	0.714
Lights	0	1	0	0	1	0	6	1	0	7	0	2	5	0	7	0	4	1	0	5	20
% Lights	-	100.0	-	-	100.0	-	100.0	100.0	-	100.0	-	100.0	100.0	-	100.0	-	100.0	100.0	-	100.0	100.0
Other Vehicles	0	0	0	0	0	0	0	0	0	0	0	0	0	0	0	0	0	0	0	0	0
% Other Vehicles	-	0.0	-	-	0.0	-	0.0	0.0	-	0.0	-	0.0	0.0	-	0.0	-	0.0	0.0	-	0.0	0.0

Stantec Consulting Ltd.
300 - 1919 Rose St

Regina, Saskatchewan, Canada S4P 3P1
306 781 6400 erin.harms@stantec.com

Count Name: T7 (Melness Rd & Winmill Rd)
Site Code:
Start Date: 05-29-2023

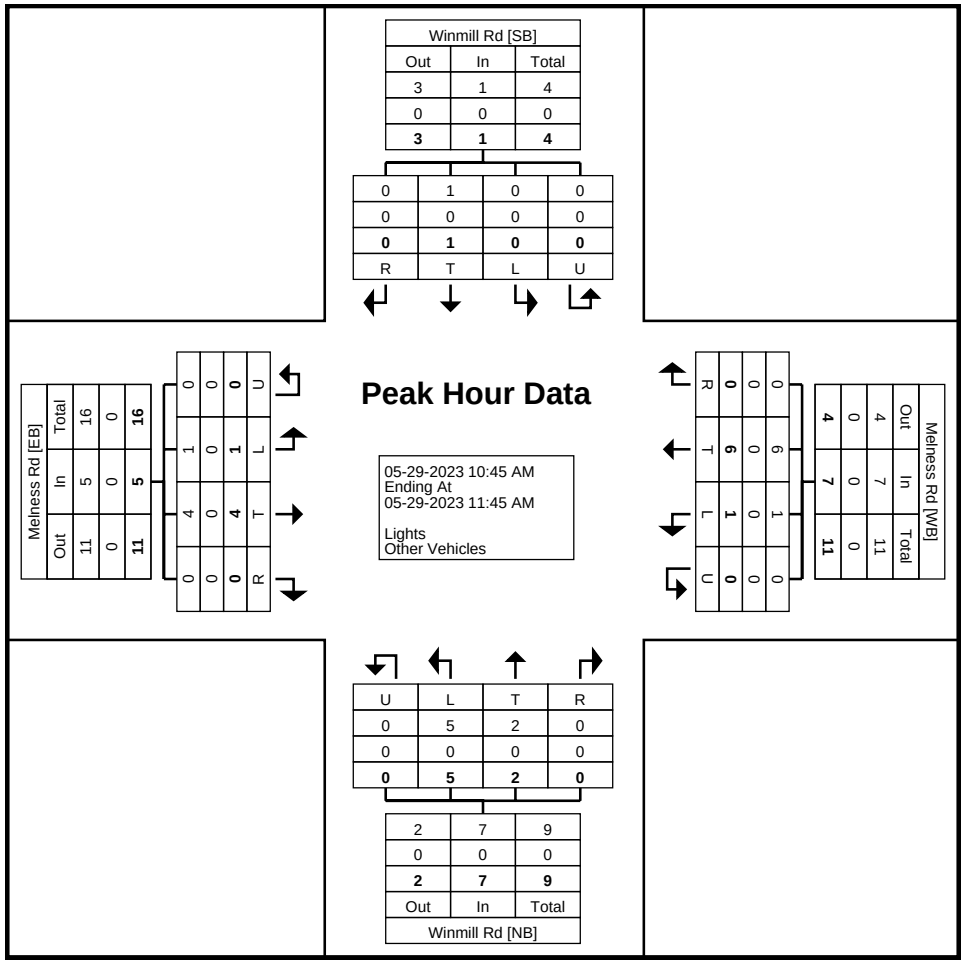

Turning Movement Peak Hour Data Plot (10:45 AM)

Stantec Consulting Ltd.
300 - 1919 Rose St

Regina, Saskatchewan, Canada S4P 3P1
306 781 6400 erin.harms@stantec.com

Count Name: T7 (Melness Rd & Winmill Rd)
Site Code:
Start Date: 05-29-2023

Turning Movement Peak Hour Data (4:00 PM)

Start Time	Winmill Rd Southbound					Melness Rd Westbound					Winmill Rd Northbound					Melness Rd Eastbound					
	Right	Thru	Left	U-Turn	App. Total	Right	Thru	Left	U-Turn	App. Total	Right	Thru	Left	U-Turn	App. Total	Right	Thru	Left	U-Turn	App. Total	Int. Total
4:00 PM	0	0	0	0	0	0	2	0	0	2	0	0	0	0	0	2	2	0	0	4	6
4:15 PM	0	0	0	0	0	0	2	0	0	2	0	0	2	0	2	1	1	0	0	2	6
4:30 PM	0	0	0	0	0	0	0	0	0	0	0	0	0	0	0	0	4	1	0	5	5
4:45 PM	0	0	0	0	0	0	3	1	0	4	0	0	1	0	1	3	3	0	0	6	11
Total	0	0	0	0	0	0	7	1	0	8	0	0	3	0	3	6	10	1	0	17	28
Approach %	0.0	0.0	0.0	0.0	-	0.0	87.5	12.5	0.0	-	0.0	0.0	100.0	0.0	-	35.3	58.8	5.9	0.0	-	-
Total %	0.0	0.0	0.0	0.0	0.0	0.0	25.0	3.6	0.0	28.6	0.0	0.0	10.7	0.0	10.7	21.4	35.7	3.6	0.0	60.7	-
PHF	0.000	0.000	0.000	0.000	0.000	0.000	0.583	0.250	0.000	0.500	0.000	0.000	0.375	0.000	0.375	0.500	0.625	0.250	0.000	0.708	0.636
Lights	0	0	0	0	0	0	6	1	0	7	0	0	3	0	3	6	10	1	0	17	27
% Lights	-	-	-	-	-	-	85.7	100.0	-	87.5	-	-	100.0	-	100.0	100.0	100.0	100.0	-	100.0	96.4
Other Vehicles	0	0	0	0	0	0	1	0	0	1	0	0	0	0	0	0	0	0	0	0	1
% Other Vehicles	-	-	-	-	-	-	14.3	0.0	-	12.5	-	-	0.0	-	0.0	0.0	0.0	0.0	-	0.0	3.6

Stantec Consulting Ltd.
300 - 1919 Rose St

Regina, Saskatchewan, Canada S4P 3P1
306 781 6400 erin.harms@stantec.com

Count Name: T7 (Melness Rd & Winmill Rd)
Site Code:
Start Date: 05-29-2023

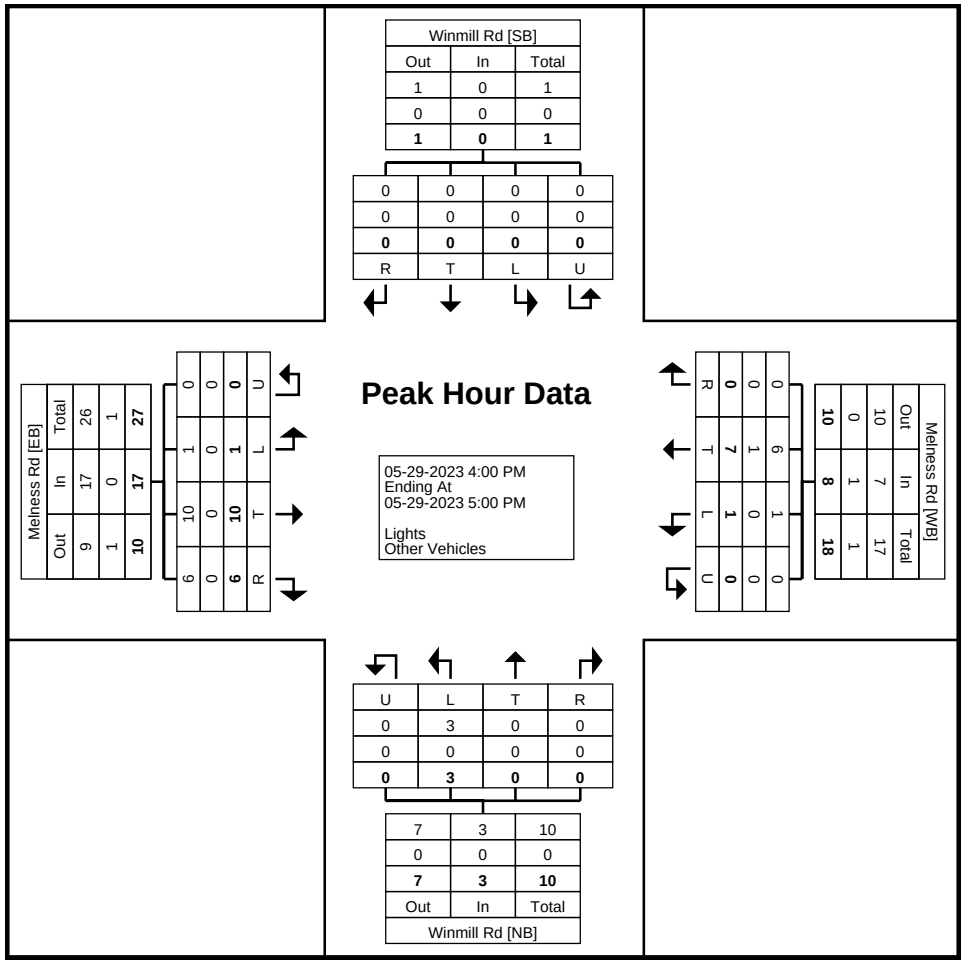

Turning Movement Peak Hour Data Plot (4:00 PM)

Stantec Consulting Ltd.
300 - 1919 Rose St

Regina, Saskatchewan, Canada S4P 3P1
306 781 6400 erin.harms@stantec.com

Count Name: T7 (Melness Rd & Winmill Rd)
Site Code:
Start Date: 05-29-2023

Turning Movement Peak Hour Data (8:00 AM)

Start Time	Winmill Rd Southbound					Melness Rd Westbound					Winmill Rd Northbound					Melness Rd Eastbound					
	Right	Thru	Left	U-Turn	App. Total	Right	Thru	Left	U-Turn	App. Total	Right	Thru	Left	U-Turn	App. Total	Right	Thru	Left	U-Turn	App. Total	Int. Total
8:00 AM	0	0	0	0	0	0	3	1	0	4	0	0	1	0	1	0	1	0	0	1	6
8:15 AM	0	0	0	0	0	0	2	0	0	2	1	0	2	0	3	0	1	0	0	1	6
8:30 AM	1	0	0	0	1	0	2	0	0	2	0	0	0	0	0	0	5	1	0	6	9
8:45 AM	0	0	0	0	0	0	2	0	0	2	0	0	1	0	1	0	1	0	0	1	4
Total	1	0	0	0	1	0	9	1	0	10	1	0	4	0	5	0	8	1	0	9	25
Approach %	100.0	0.0	0.0	0.0	-	0.0	90.0	10.0	0.0	-	20.0	0.0	80.0	0.0	-	0.0	88.9	11.1	0.0	-	-
Total %	4.0	0.0	0.0	0.0	4.0	0.0	36.0	4.0	0.0	40.0	4.0	0.0	16.0	0.0	20.0	0.0	32.0	4.0	0.0	36.0	-
PHF	0.250	0.000	0.000	0.000	0.250	0.000	0.750	0.250	0.000	0.625	0.250	0.000	0.500	0.000	0.417	0.000	0.400	0.250	0.000	0.375	0.694
Lights	1	0	0	0	1	0	8	0	0	8	1	0	4	0	5	0	7	1	0	8	22
% Lights	100.0	-	-	-	100.0	-	88.9	0.0	-	80.0	100.0	-	100.0	-	100.0	-	87.5	100.0	-	88.9	88.0
Other Vehicles	0	0	0	0	0	0	1	1	0	2	0	0	0	0	0	0	1	0	0	1	3
% Other Vehicles	0.0	-	-	-	0.0	-	11.1	100.0	-	20.0	0.0	-	0.0	-	0.0	-	12.5	0.0	-	11.1	12.0

Stantec Consulting Ltd.
300 - 1919 Rose St

Regina, Saskatchewan, Canada S4P 3P1
306 781 6400 erin.harms@stantec.com

Count Name: T7 (Melness Rd & Winmill Rd)
Site Code:
Start Date: 05-29-2023

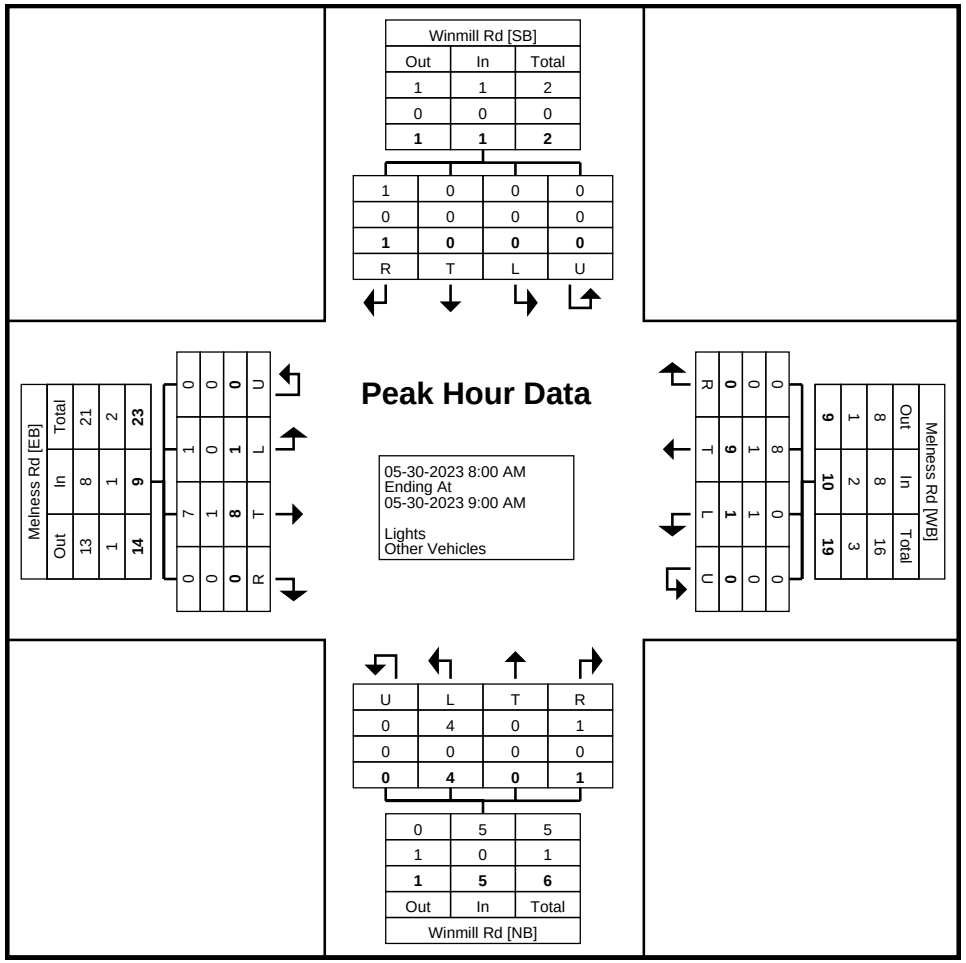

Turning Movement Peak Hour Data Plot (8:00 AM)

Stantec Consulting Ltd.
300 - 1919 Rose St

Regina, Saskatchewan, Canada S4P 3P1
306 781 6400 erin.harms@stantec.com

Count Name: T8 (Tamke Rd & Range Rd 3044)
Site Code:
Start Date: 05-25-2023

Turning Movement Data

Start Time	Range Rd 3044 Southbound				Tamke Rd Westbound				Tamke Rd Eastbound				
	Right	Left	U-Turn	App. Total	Right	Thru	U-Turn	App. Total	Thru	Left	U-Turn	App. Total	Int. Total
2:30 PM	0	0	0	0	0	0	0	0	0	0	0	0	0
2:45 PM	0	0	0	0	0	0	0	0	0	0	0	0	0
Hourly Total	0	0	0	0	0	0	0	0	0	0	0	0	0
3:00 PM	0	0	0	0	0	0	0	0	0	0	0	0	0
3:15 PM	0	0	0	0	0	0	0	0	0	0	0	0	0
3:30 PM	0	0	0	0	0	0	0	0	0	0	0	0	0
3:45 PM	0	0	0	0	0	0	0	0	0	0	0	0	0
Hourly Total	0	0	0	0	0	0	0	0	0	0	0	0	0
4:00 PM	0	0	0	0	0	0	0	0	0	0	0	0	0
4:15 PM	0	0	0	0	0	0	0	0	0	0	0	0	0
4:30 PM	0	0	0	0	0	0	0	0	0	0	0	0	0
4:45 PM	0	0	0	0	0	0	0	0	0	0	0	0	0
Hourly Total	0	0	0	0	0	0	0	0	0	0	0	0	0
5:00 PM	0	0	0	0	0	0	0	0	0	0	0	0	0
5:15 PM	0	0	0	0	0	0	0	0	0	0	0	0	0
5:30 PM	0	0	0	0	0	0	0	0	0	0	0	0	0
5:45 PM	0	0	0	0	0	0	0	0	0	0	0	0	0
Hourly Total	0	0	0	0	0	0	0	0	0	0	0	0	0
6:00 PM	0	0	0	0	0	0	0	0	0	0	0	0	0
6:15 PM	0	0	0	0	0	0	0	0	0	0	0	0	0
6:30 PM	0	0	0	0	0	0	0	0	0	0	0	0	0
6:45 PM	0	0	0	0	0	0	0	0	0	0	0	0	0
Hourly Total	0	0	0	0	0	0	0	0	0	0	0	0	0
7:00 PM	0	0	0	0	0	0	0	0	0	0	0	0	0
7:15 PM	0	0	0	0	0	0	0	0	0	0	0	0	0
7:30 PM	0	0	0	0	0	0	0	0	0	0	0	0	0
7:45 PM	0	0	0	0	0	0	0	0	0	0	0	0	0
Hourly Total	0	0	0	0	0	0	0	0	0	0	0	0	0
8:00 PM	0	0	0	0	0	0	0	0	0	0	0	0	0
8:15 PM	0	0	0	0	0	0	0	0	0	0	0	0	0
8:30 PM	0	0	0	0	0	0	0	0	0	0	0	0	0
8:45 PM	0	0	0	0	0	0	0	0	0	0	0	0	0
Hourly Total	0	0	0	0	0	0	0	0	0	0	0	0	0
9:00 PM	0	0	0	0	0	0	0	0	0	0	0	0	0
9:15 PM	0	0	0	0	0	0	0	0	0	0	0	0	0
9:30 PM	0	0	0	0	0	0	0	0	0	0	0	0	0

9:45 PM	0	0	0	0	0	0	0	0	0	0	0	0	0
Hourly Total	0	0	0	0	0	0	0	0	0	0	0	0	0
10:00 PM	0	0	0	0	0	0	0	0	0	0	0	0	0
10:15 PM	0	0	0	0	0	0	0	0	0	0	0	0	0
10:30 PM	0	0	0	0	0	0	0	0	0	0	0	0	0
10:45 PM	0	0	0	0	0	0	0	0	0	0	0	0	0
Hourly Total	0	0	0	0	0	0	0	0	0	0	0	0	0
11:00 PM	0	0	0	0	0	0	0	0	0	0	0	0	0
11:15 PM	0	0	0	0	0	0	0	0	0	0	0	0	0
11:30 PM	0	0	0	0	0	0	0	0	0	0	0	0	0
11:45 PM	0	0	0	0	0	0	0	0	0	0	0	0	0
Hourly Total	0	0	0	0	0	0	0	0	0	0	0	0	0
12:00 AM	0	0	0	0	0	0	0	0	0	0	0	0	0
12:15 AM	0	0	0	0	0	0	0	0	0	0	0	0	0
12:30 AM	0	0	0	0	0	0	0	0	0	0	0	0	0
12:45 AM	0	0	0	0	0	0	0	0	0	0	0	0	0
Hourly Total	0	0	0	0	0	0	0	0	0	0	0	0	0
1:00 AM	0	0	0	0	0	0	0	0	0	0	0	0	0
1:15 AM	0	0	0	0	0	0	0	0	0	0	0	0	0
1:30 AM	0	0	0	0	0	0	0	0	0	0	0	0	0
1:45 AM	0	0	0	0	0	0	0	0	0	0	0	0	0
Hourly Total	0	0	0	0	0	0	0	0	0	0	0	0	0
2:00 AM	0	0	0	0	0	0	0	0	0	0	0	0	0
2:15 AM	0	0	0	0	0	0	0	0	0	0	0	0	0
2:30 AM	0	0	0	0	0	0	0	0	0	0	0	0	0
2:45 AM	0	0	0	0	0	0	0	0	0	0	0	0	0
Hourly Total	0	0	0	0	0	0	0	0	0	0	0	0	0
3:00 AM	0	0	0	0	0	0	0	0	0	0	0	0	0
3:15 AM	0	0	0	0	0	0	0	0	0	0	0	0	0
3:30 AM	0	0	0	0	0	0	0	0	0	0	0	0	0
3:45 AM	0	0	0	0	0	0	0	0	0	0	0	0	0
Hourly Total	0	0	0	0	0	0	0	0	0	0	0	0	0
4:00 AM	0	0	0	0	0	0	0	0	0	0	0	0	0
4:15 AM	0	0	0	0	0	0	0	0	0	0	0	0	0
4:30 AM	0	0	0	0	0	0	0	0	0	0	0	0	0
4:45 AM	0	0	0	0	0	0	0	0	0	0	0	0	0
Hourly Total	0	0	0	0	0	0	0	0	0	0	0	0	0
5:00 AM	0	0	0	0	0	0	0	0	0	0	0	0	0
5:15 AM	0	0	0	0	0	0	0	0	0	0	0	0	0
5:30 AM	0	0	0	0	0	0	0	0	0	0	0	0	0
5:45 AM	0	0	0	0	0	0	0	0	0	0	0	0	0
Hourly Total	0	0	0	0	0	0	0	0	0	0	0	0	0
6:00 AM	0	0	0	0	0	0	0	0	0	0	0	0	0
6:15 AM	0	0	0	0	0	0	0	0	0	0	0	0	0
6:30 AM	0	0	0	0	0	0	0	0	0	0	0	0	0
6:45 AM	0	0	0	0	0	0	0	0	0	0	0	0	0
Hourly Total	0	0	0	0	0	0	0	0	0	0	0	0	0
7:00 AM	0	0	0	0	0	0	0	0	0	0	0	0	0
7:15 AM	0	0	0	0	0	0	0	0	0	0	0	0	0
7:30 AM	0	0	0	0	0	0	0	0	0	0	0	0	0
7:45 AM	0	0	0	0	0	0	0	0	0	0	0	0	0
Hourly Total	0	0	0	0	0	0	0	0	0	0	0	0	0

8:00 AM	0	0	0	0	0	0	0	0	0	0	0	0	0
8:15 AM	0	0	0	0	0	0	0	0	0	0	0	0	0
8:30 AM	0	0	0	0	0	0	0	0	0	0	0	0	0
8:45 AM	0	0	0	0	0	0	0	0	0	0	0	0	0
Hourly Total	0	0	0	0	0	0	0	0	0	0	0	0	0
9:00 AM	0	0	0	0	0	0	0	0	0	0	0	0	0
9:15 AM	0	0	0	0	0	0	0	0	0	0	0	0	0
9:30 AM	0	0	0	0	0	0	0	0	0	0	0	0	0
9:45 AM	0	0	0	0	0	0	0	0	0	0	0	0	0
Hourly Total	0	0	0	0	0	0	0	0	0	0	0	0	0
10:00 AM	0	0	0	0	0	0	0	0	0	0	0	0	0
10:15 AM	0	0	0	0	0	0	0	0	0	0	0	0	0
10:30 AM	0	0	0	0	0	0	0	0	0	0	0	0	0
10:45 AM	0	0	0	0	0	0	0	0	0	0	0	0	0
Hourly Total	0	0	0	0	0	0	0	0	0	0	0	0	0
*** BREAK ***	-	-	-	-	-	-	-	-	-	-	-	-	-
11:00 AM	0	1	0	1	0	3	0	3	5	1	0	6	10
11:15 AM	0	0	0	0	0	2	0	2	2	0	0	2	4
11:30 AM	0	0	0	0	0	3	0	3	4	0	0	4	7
11:45 AM	0	1	0	1	0	3	0	3	2	1	0	3	7
Hourly Total	0	2	0	2	0	11	0	11	13	2	0	15	28
12:00 PM	0	0	0	0	0	7	0	7	3	0	0	3	10
12:15 PM	0	0	0	0	0	3	0	3	2	0	0	2	5
12:30 PM	0	0	0	0	0	2	0	2	4	0	0	4	6
12:45 PM	0	0	0	0	0	2	0	2	5	0	0	5	7
Hourly Total	0	0	0	0	0	14	0	14	14	0	0	14	28
1:00 PM	1	0	0	1	0	2	1	3	2	0	0	2	6
1:15 PM	0	0	0	0	0	0	0	0	1	1	0	2	2
1:30 PM	0	0	0	0	0	2	0	2	9	0	0	9	11
1:45 PM	0	0	0	0	0	2	0	2	3	0	0	3	5
Hourly Total	1	0	0	1	0	6	1	7	15	1	0	16	24
2:00 PM	0	1	0	1	0	2	0	2	2	0	0	2	5
2:15 PM	0	0	0	0	2	3	1	6	5	0	0	5	11
Grand Total	1	3	0	4	2	36	2	40	49	3	0	52	96
Approach %	25.0	75.0	0.0	-	5.0	90.0	5.0	-	94.2	5.8	0.0	-	-
Total %	1.0	3.1	0.0	4.2	2.1	37.5	2.1	41.7	51.0	3.1	0.0	54.2	-
Lights	1	2	0	3	2	34	1	37	44	3	0	47	87
% Lights	100.0	66.7	-	75.0	100.0	94.4	50.0	92.5	89.8	100.0	-	90.4	90.6
Other Vehicles	0	1	0	1	0	2	1	3	5	0	0	5	9
% Other Vehicles	0.0	33.3	-	25.0	0.0	5.6	50.0	7.5	10.2	0.0	-	9.6	9.4

Stantec Consulting Ltd.
300 - 1919 Rose St

Regina, Saskatchewan, Canada S4P 3P1
306 781 6400 erin.harms@stantec.com

Count Name: T8 (Tamke Rd & Range Rd 3044)
Site Code:
Start Date: 05-25-2023

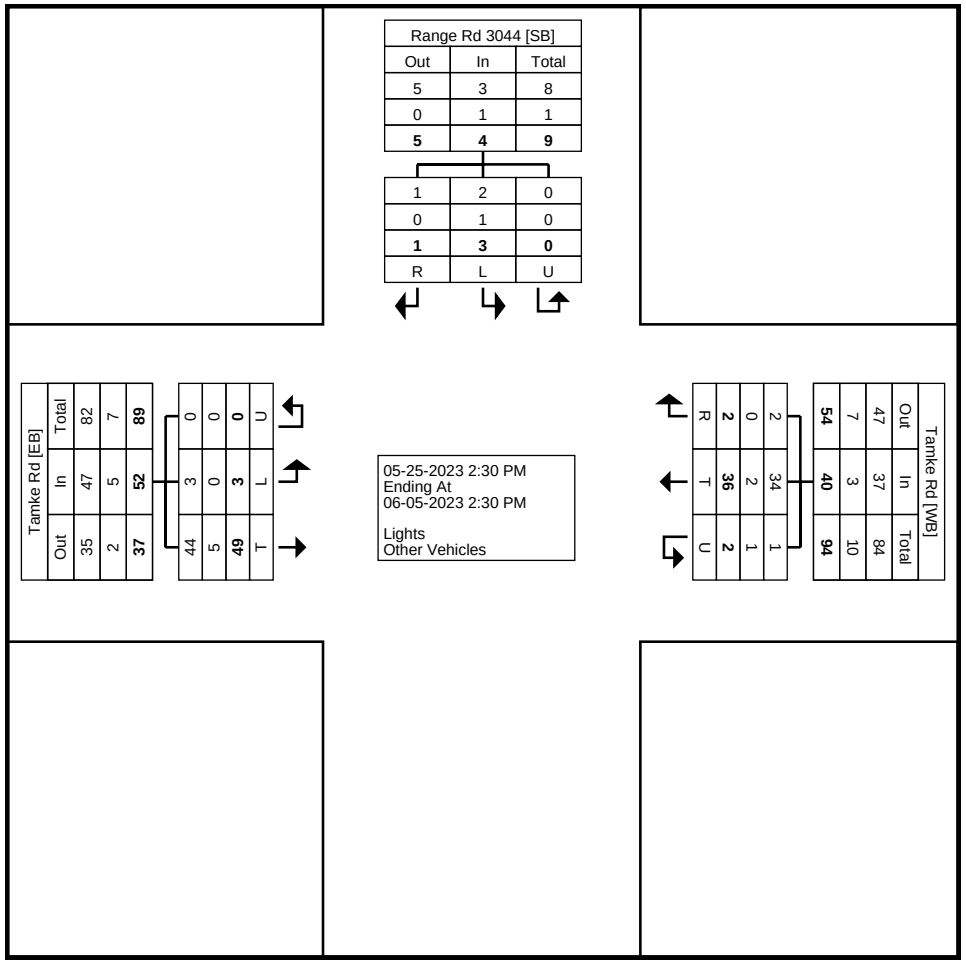

Turning Movement Data Plot

Stantec Consulting Ltd.
300 - 1919 Rose St

Regina, Saskatchewan, Canada S4P 3P1
306 781 6400 erin.harms@stantec.com

Count Name: T8 (Tamke Rd & Range Rd 3044)
Site Code:
Start Date: 05-25-2023

Turning Movement Peak Hour Data (2:30 PM)

Start Time	Range Rd 3044 Southbound				Tamke Rd Westbound				Tamke Rd Eastbound				
	Right	Left	U-Turn	App. Total	Right	Thru	U-Turn	App. Total	Thru	Left	U-Turn	App. Total	Int. Total
2:30 PM	0	0	0	0	0	0	0	0	0	0	0	0	0
2:45 PM	0	0	0	0	0	0	0	0	0	0	0	0	0
3:00 PM	0	0	0	0	0	0	0	0	0	0	0	0	0
3:15 PM	0	0	0	0	0	0	0	0	0	0	0	0	0
Total	0	0	0	0	0	0	0	0	0	0	0	0	0
Approach %	0.0	0.0	0.0	-	0.0	0.0	0.0	-	0.0	0.0	0.0	-	-
Total %	0.0	0.0	0.0	0.0	0.0	0.0	0.0	0.0	0.0	0.0	0.0	0.0	-
PHF	0.000	0.000	0.000	0.000	0.000	0.000	0.000	0.000	0.000	0.000	0.000	0.000	0.000
Lights	0	0	0	0	0	0	0	0	0	0	0	0	0
% Lights	-	-	-	-	-	-	-	-	-	-	-	-	-
Other Vehicles	0	0	0	0	0	0	0	0	0	0	0	0	0
% Other Vehicles	-	-	-	-	-	-	-	-	-	-	-	-	-

Stantec Consulting Ltd.
300 - 1919 Rose St

Regina, Saskatchewan, Canada S4P 3P1
306 781 6400 erin.harms@stantec.com

Count Name: T8 (Tamke Rd & Range Rd 3044)
Site Code:
Start Date: 05-25-2023

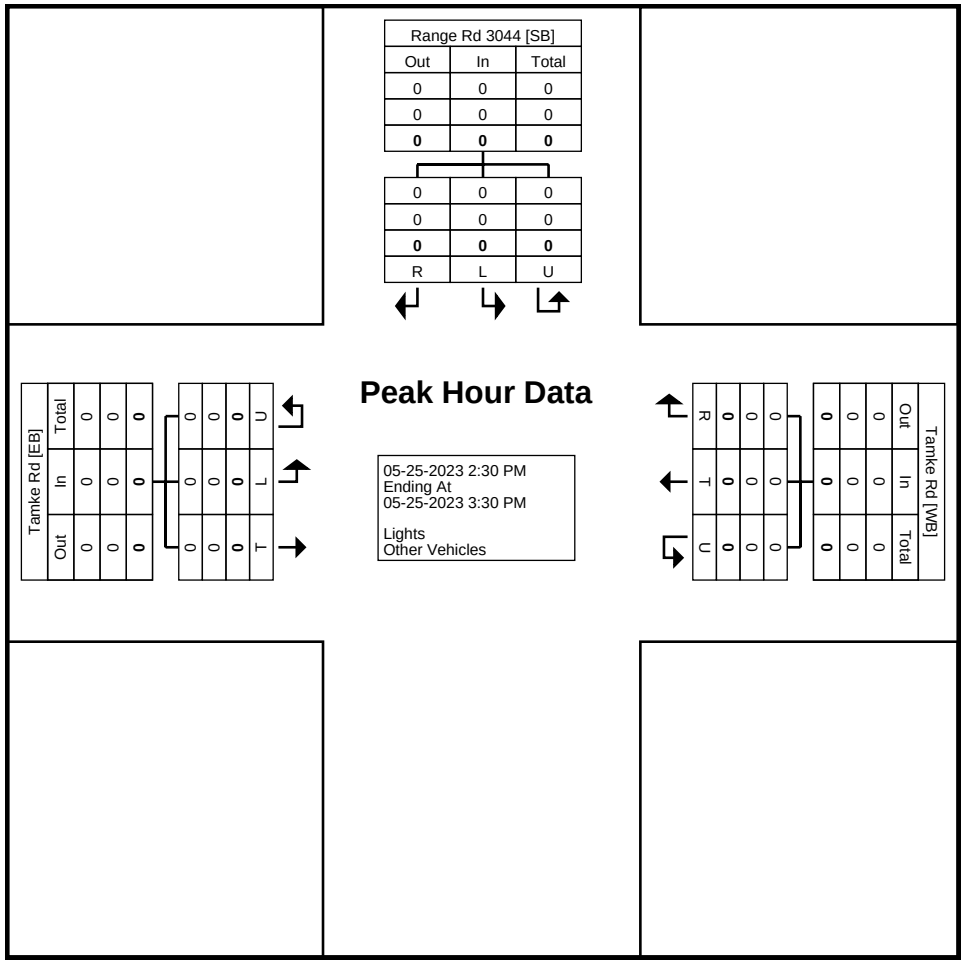

Turning Movement Peak Hour Data Plot (2:30 PM)

Stantec Consulting Ltd.
300 - 1919 Rose St

Regina, Saskatchewan, Canada S4P 3P1
306 781 6400 erin.harms@stantec.com

Count Name: T8 (Tamke Rd & Range Rd 3044)
Site Code:
Start Date: 05-25-2023

Turning Movement Peak Hour Data (12:00 AM)

Start Time	Range Rd 3044 Southbound				Tamke Rd Westbound				Tamke Rd Eastbound				
	Right	Left	U-Turn	App. Total	Right	Thru	U-Turn	App. Total	Thru	Left	U-Turn	App. Total	Int. Total
12:00 AM	0	0	0	0	0	0	0	0	0	0	0	0	0
12:15 AM	0	0	0	0	0	0	0	0	0	0	0	0	0
12:30 AM	0	0	0	0	0	0	0	0	0	0	0	0	0
12:45 AM	0	0	0	0	0	0	0	0	0	0	0	0	0
Total	0	0	0	0	0	0	0	0	0	0	0	0	0
Approach %	0.0	0.0	0.0	-	0.0	0.0	0.0	-	0.0	0.0	0.0	-	-
Total %	0.0	0.0	0.0	0.0	0.0	0.0	0.0	0.0	0.0	0.0	0.0	0.0	-
PHF	0.000	0.000	0.000	0.000	0.000	0.000	0.000	0.000	0.000	0.000	0.000	0.000	0.000
Lights	0	0	0	0	0	0	0	0	0	0	0	0	0
% Lights	-	-	-	-	-	-	-	-	-	-	-	-	-
Other Vehicles	0	0	0	0	0	0	0	0	0	0	0	0	0
% Other Vehicles	-	-	-	-	-	-	-	-	-	-	-	-	-

Stantec Consulting Ltd.
300 - 1919 Rose St

Regina, Saskatchewan, Canada S4P 3P1
306 781 6400 erin.harms@stantec.com

Count Name: T8 (Tamke Rd & Range Rd 3044)
Site Code:
Start Date: 05-25-2023
Page No: 8

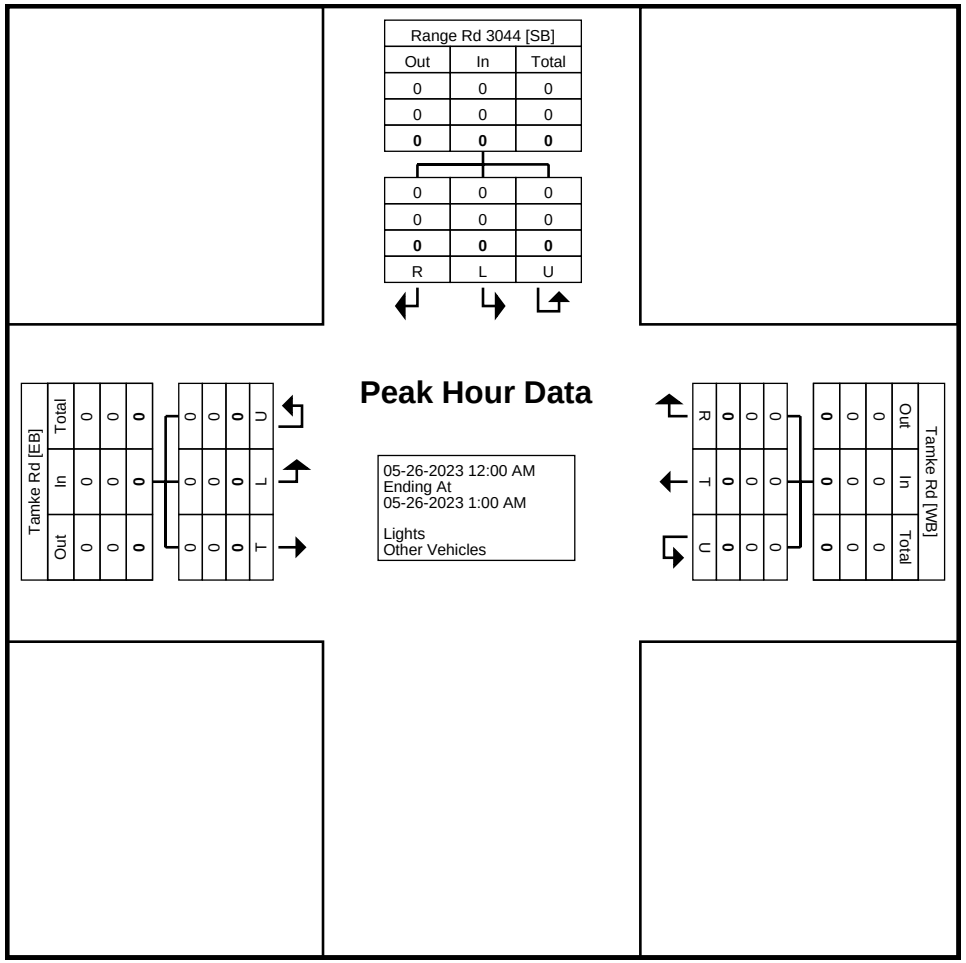

Turning Movement Peak Hour Data Plot (12:00 AM)

Stantec Consulting Ltd.
300 - 1919 Rose St

Regina, Saskatchewan, Canada S4P 3P1
306 781 6400 erin.harms@stantec.com

Count Name: T8 (Tamke Rd & Range Rd 3044)
Site Code:
Start Date: 05-25-2023

Turning Movement Peak Hour Data (11:00 AM)

Start Time	Range Rd 3044 Southbound				Tamke Rd Westbound				Tamke Rd Eastbound				
	Right	Left	U-Turn	App. Total	Right	Thru	U-Turn	App. Total	Thru	Left	U-Turn	App. Total	Int. Total
11:00 AM	0	1	0	1	0	3	0	3	5	1	0	6	10
11:15 AM	0	0	0	0	0	2	0	2	2	0	0	2	4
11:30 AM	0	0	0	0	0	3	0	3	4	0	0	4	7
11:45 AM	0	1	0	1	0	3	0	3	2	1	0	3	7
Total	0	2	0	2	0	11	0	11	13	2	0	15	28
Approach %	0.0	100.0	0.0	-	0.0	100.0	0.0	-	86.7	13.3	0.0	-	-
Total %	0.0	7.1	0.0	7.1	0.0	39.3	0.0	39.3	46.4	7.1	0.0	53.6	-
PHF	0.000	0.500	0.000	0.500	0.000	0.917	0.000	0.917	0.650	0.500	0.000	0.625	0.700
Lights	0	1	0	1	0	11	0	11	10	2	0	12	24
% Lights	-	50.0	-	50.0	-	100.0	-	100.0	76.9	100.0	-	80.0	85.7
Other Vehicles	0	1	0	1	0	0	0	0	3	0	0	3	4
% Other Vehicles	-	50.0	-	50.0	-	0.0	-	0.0	23.1	0.0	-	20.0	14.3

Stantec Consulting Ltd.
300 - 1919 Rose St

Regina, Saskatchewan, Canada S4P 3P1
306 781 6400 erin.harms@stantec.com

Count Name: T8 (Tamke Rd & Range Rd 3044)
Site Code:
Start Date: 05-25-2023

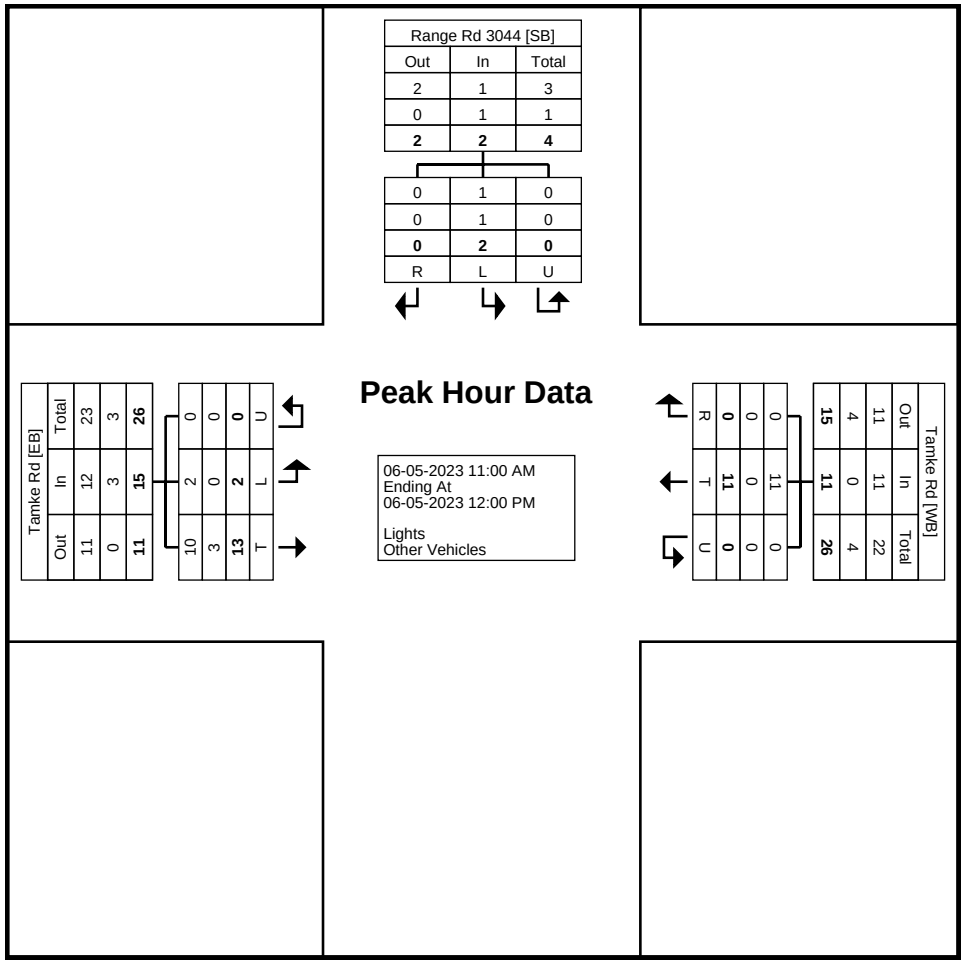

Turning Movement Peak Hour Data Plot (11:00 AM)

Stantec Consulting Ltd.
300 - 1919 Rose St

Regina, Saskatchewan, Canada S4P 3P1
306 781 6400 erin.harms@stantec.com

Count Name: T8 (Tamke Rd & Range Rd 3044)
Site Code:
Start Date: 05-25-2023

Turning Movement Peak Hour Data (1:30 PM)

Start Time	Range Rd 3044 Southbound				Tamke Rd Westbound				Tamke Rd Eastbound				
	Right	Left	U-Turn	App. Total	Right	Thru	U-Turn	App. Total	Thru	Left	U-Turn	App. Total	Int. Total
1:30 PM	0	0	0	0	0	2	0	2	9	0	0	9	11
1:45 PM	0	0	0	0	0	2	0	2	3	0	0	3	5
2:00 PM	0	1	0	1	0	2	0	2	2	0	0	2	5
2:15 PM	0	0	0	0	2	3	1	6	5	0	0	5	11
Total	0	1	0	1	2	9	1	12	19	0	0	19	32
Approach %	0.0	100.0	0.0	-	16.7	75.0	8.3	-	100.0	0.0	0.0	-	-
Total %	0.0	3.1	0.0	3.1	6.3	28.1	3.1	37.5	59.4	0.0	0.0	59.4	-
PHF	0.000	0.250	0.000	0.250	0.250	0.750	0.250	0.500	0.528	0.000	0.000	0.528	0.727
Lights	0	1	0	1	2	7	1	10	17	0	0	17	28
% Lights	-	100.0	-	100.0	100.0	77.8	100.0	83.3	89.5	-	-	89.5	87.5
Other Vehicles	0	0	0	0	0	2	0	2	2	0	0	2	4
% Other Vehicles	-	0.0	-	0.0	0.0	22.2	0.0	16.7	10.5	-	-	10.5	12.5

Stantec Consulting Ltd.
300 - 1919 Rose St

Regina, Saskatchewan, Canada S4P 3P1
306 781 6400 erin.harms@stantec.com

Count Name: T8 (Tamke Rd & Range Rd 3044)
Site Code:
Start Date: 05-25-2023

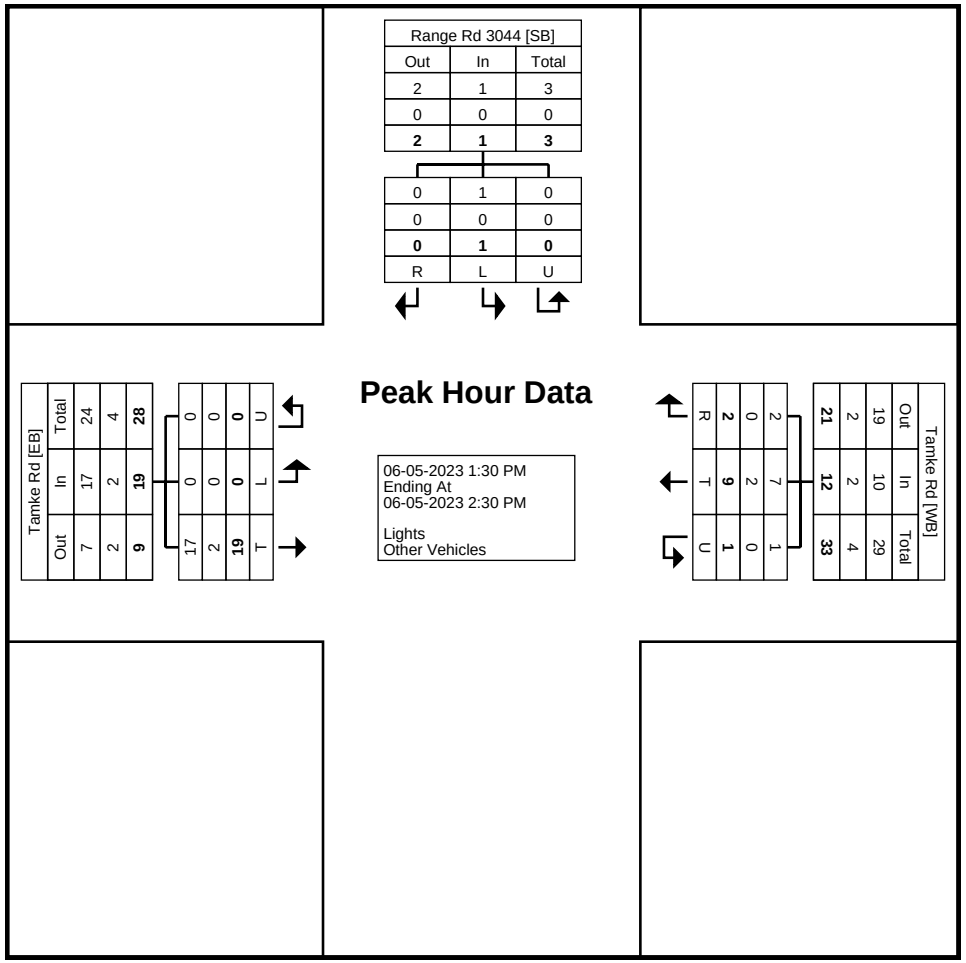

Turning Movement Peak Hour Data Plot (1:30 PM)

Stantec Consulting Ltd.
300 - 1919 Rose St

Regina, Saskatchewan, Canada S4P 3P1
306 781 6400 erin.harms@stantec.com

Count Name: T9 (Baker Rd & Range Rd 3045)
Site Code:
Start Date: 05-25-2023

Turning Movement Data

Start Time	Range Rd 3045 Southbound					Baker Rd Westbound					Range Rd 3045 Northbound					Baker Rd Eastbound					
	Right	Thru	Left	U-Turn	App. Total	Right	Thru	Left	U-Turn	App. Total	Right	Thru	Left	U-Turn	App. Total	Right	Thru	Left	U-Turn	App. Total	Int. Total
6:00 PM	0	0	0	0	0	0	3	0	0	3	0	0	0	0	0	1	3	1	0	5	8
6:15 PM	0	0	0	0	0	0	5	1	0	6	0	0	0	0	0	0	1	1	0	2	8
6:30 PM	0	0	0	0	0	0	4	0	0	4	0	0	0	0	0	0	2	0	0	2	6
6:45 PM	0	0	0	0	0	0	3	0	0	3	0	0	0	0	0	0	0	0	0	0	3
Hourly Total	0	0	0	0	0	0	15	1	0	16	0	0	0	0	0	1	6	2	0	9	25
7:00 PM	0	0	0	0	0	0	0	0	0	0	0	0	0	0	0	0	1	0	0	1	1
7:15 PM	0	0	0	0	0	0	2	0	0	2	0	0	0	0	0	0	2	0	0	2	4
7:30 PM	0	0	0	0	0	0	0	0	0	0	0	0	0	0	0	0	3	0	0	3	3
7:45 PM	0	0	0	0	0	0	2	0	0	2	0	0	0	0	0	0	1	0	0	1	3
Hourly Total	0	0	0	0	0	0	4	0	0	4	0	0	0	0	0	0	7	0	0	7	11
8:00 PM	0	0	0	0	0	0	0	0	0	0	0	0	0	0	0	0	2	0	0	2	2
8:15 PM	0	0	0	0	0	0	2	0	0	2	0	0	0	0	0	0	0	0	0	0	2
8:30 PM	0	0	0	0	0	0	0	0	0	0	0	0	0	0	0	0	0	0	0	0	0
8:45 PM	0	0	0	0	0	0	0	0	0	0	0	0	0	0	0	0	0	0	0	0	0
Hourly Total	0	0	0	0	0	0	2	0	0	2	0	0	0	0	0	0	2	0	0	2	4
9:00 PM	0	0	0	0	0	0	0	0	0	0	0	0	0	0	0	0	2	1	1	4	4
9:15 PM	0	0	0	0	0	0	1	0	0	1	0	0	0	0	0	0	2	0	0	2	3
9:30 PM	0	0	0	0	0	0	0	1	0	1	0	0	0	0	0	0	1	0	0	1	2
9:45 PM	0	0	0	0	0	0	0	0	0	0	0	0	0	0	0	1	0	0	0	1	1
Hourly Total	0	0	0	0	0	0	1	1	0	2	0	0	0	0	0	1	5	1	1	8	10
10:00 PM	0	0	0	0	0	0	0	0	0	0	0	0	1	0	1	0	2	0	0	2	3
10:15 PM	0	0	0	0	0	0	0	0	0	0	0	0	0	0	0	0	1	0	0	1	1
10:30 PM	0	0	0	0	0	0	1	0	0	1	0	0	0	0	0	1	0	1	0	2	3
10:45 PM	0	0	0	0	0	0	0	0	0	0	0	0	0	0	0	0	0	0	0	0	0
Hourly Total	0	0	0	0	0	0	1	0	0	1	0	0	1	0	1	1	3	1	0	5	7
11:00 PM	0	0	0	0	0	0	0	0	0	0	0	0	0	0	0	0	0	0	0	0	0
11:15 PM	0	0	0	0	0	0	0	0	0	0	0	0	0	0	0	0	0	0	0	0	0
11:30 PM	0	0	0	0	0	0	0	0	0	0	0	0	0	0	0	0	0	0	0	0	0
11:45 PM	0	0	0	0	0	0	0	0	0	0	0	0	0	0	0	0	0	0	0	0	0
Hourly Total	0	0	0	0	0	0	0	0	0	0	0	0	0	0	0	0	0	0	0	0	0
12:00 AM	0	0	0	0	0	0	0	0	0	0	0	0	0	0	0	0	0	0	0	0	0
12:15 AM	0	0	0	0	0	0	0	0	0	0	0	0	0	0	0	0	0	0	0	0	0
12:30 AM	0	0	0	0	0	0	0	0	0	0	0	0	0	0	0	0	0	0	0	0	0
12:45 AM	0	0	0	0	0	0	0	0	0	0	0	0	0	0	0	0	0	0	0	0	0
Hourly Total	0	0	0	0	0	0	0	0	0	0	0	0	0	0	0	0	0	0	0	0	0
1:00 AM	0	0	0	0	0	0	0	0	0	0	0	0	0	0	0	0	0	0	0	0	0

1:15 AM	0	0	0	0	0	0	0	0	0	0	0	0	0	0	0	1	0	0	0	1	1
1:30 AM	0	0	0	0	0	0	0	0	0	0	0	0	0	0	0	0	0	0	0	0	0
1:45 AM	0	0	0	0	0	0	0	0	0	0	0	0	0	0	0	1	0	0	0	1	1
Hourly Total	0	0	0	0	0	0	0	0	0	0	0	0	0	0	0	2	0	0	0	2	2
2:00 AM	0	0	0	0	0	0	0	0	0	0	0	0	0	0	0	0	0	0	0	0	0
2:15 AM	0	0	0	0	0	0	0	0	0	0	0	0	0	0	0	0	0	0	0	0	0
2:30 AM	0	0	0	0	0	0	0	0	0	0	0	0	0	0	0	0	0	0	0	0	0
2:45 AM	0	0	0	0	0	0	0	0	0	0	0	0	0	0	0	0	0	0	0	0	0
Hourly Total	0	0	0	0	0	0	0	0	0	0	0	0	0	0	0	0	0	0	0	0	0
3:00 AM	0	0	0	0	0	0	0	0	0	0	0	0	0	0	0	0	0	0	0	0	0
3:15 AM	0	0	0	0	0	0	0	0	0	0	0	0	0	0	0	0	0	0	0	0	0
3:30 AM	0	0	0	0	0	0	0	0	0	0	0	0	0	0	0	0	0	0	0	0	0
3:45 AM	0	0	0	0	0	0	0	0	0	0	0	0	0	0	0	0	0	0	0	0	0
Hourly Total	0	0	0	0	0	0	0	0	0	0	0	0	0	0	0	0	0	0	0	0	0
4:00 AM	0	0	0	0	0	0	0	0	0	0	0	0	0	0	0	0	0	0	0	0	0
4:15 AM	0	0	0	0	0	0	0	0	0	0	0	0	0	0	0	0	0	0	0	0	0
4:30 AM	0	0	0	0	0	0	0	0	0	0	0	0	0	0	0	0	0	0	0	0	0
4:45 AM	0	0	0	0	0	0	0	0	0	0	0	0	0	0	0	0	0	0	0	0	0
Hourly Total	0	0	0	0	0	0	0	0	0	0	0	0	0	0	0	0	0	0	0	0	0
5:00 AM	0	0	0	0	0	0	0	0	0	0	0	0	0	0	0	0	1	0	0	1	1
5:15 AM	1	0	0	0	1	0	0	0	0	0	0	0	0	0	0	0	0	0	0	0	1
5:30 AM	1	0	0	0	1	0	0	0	0	0	0	0	0	0	0	0	0	0	0	0	1
5:45 AM	0	0	0	0	0	0	0	0	0	0	0	0	0	0	0	0	0	0	0	0	0
Hourly Total	2	0	0	0	2	0	0	0	0	0	0	0	0	0	0	0	1	0	0	1	3
6:00 AM	0	0	0	0	0	0	0	0	0	0	0	0	0	0	0	0	0	0	0	0	0
6:15 AM	0	0	0	0	0	0	0	0	0	0	0	0	1	0	1	0	0	0	0	0	1
6:30 AM	0	0	0	0	0	0	1	0	0	1	0	0	0	0	0	0	0	1	0	1	2
6:45 AM	0	0	0	0	0	0	5	0	0	5	0	0	0	0	0	0	1	0	0	1	6
Hourly Total	0	0	0	0	0	0	6	0	0	6	0	0	1	0	1	0	1	1	0	2	9
7:00 AM	0	0	0	0	0	0	1	0	0	1	0	0	0	0	0	0	2	0	0	2	3
7:15 AM	0	0	0	0	0	0	0	0	0	0	0	0	0	0	0	0	1	0	0	1	1
7:30 AM	0	0	0	0	0	0	3	1	0	4	0	0	2	0	2	0	1	0	0	1	7
7:45 AM	0	0	0	0	0	0	1	0	0	1	1	1	0	0	2	0	0	0	0	0	3
Hourly Total	0	0	0	0	0	0	5	1	0	6	1	1	2	0	4	0	4	0	0	4	14
8:00 AM	0	0	0	0	0	0	5	0	0	5	0	0	1	0	1	0	1	0	0	1	7
8:15 AM	0	0	0	0	0	0	2	0	0	2	0	0	0	0	0	1	1	0	0	2	4
8:30 AM	0	0	0	0	0	0	3	0	0	3	0	1	2	0	3	0	3	0	0	3	9
8:45 AM	0	0	0	0	0	0	0	0	0	0	0	0	0	0	0	2	2	0	0	4	4
Hourly Total	0	0	0	0	0	0	10	0	0	10	0	1	3	0	4	3	7	0	0	10	24
9:00 AM	0	0	0	0	0	0	3	0	0	3	0	0	0	0	0	0	2	0	0	2	5
9:15 AM	0	0	0	0	0	0	5	0	0	5	0	0	0	0	0	0	3	0	0	3	8
9:30 AM	0	1	0	0	1	0	0	0	0	0	0	0	0	0	0	2	3	0	0	5	6
9:45 AM	0	0	0	0	0	0	0	0	0	0	0	0	1	0	1	0	0	0	0	0	1
Hourly Total	0	1	0	0	1	0	8	0	0	8	0	0	1	0	1	2	8	0	0	10	20
10:00 AM	0	0	0	0	0	0	1	0	0	1	0	0	1	0	1	0	1	0	0	1	3
10:15 AM	0	0	0	0	0	0	1	0	0	1	0	0	0	0	0	0	1	0	0	1	2
10:30 AM	0	0	0	0	0	0	3	0	0	3	0	0	0	0	0	0	0	0	0	0	3
10:45 AM	0	0	0	0	0	0	3	0	0	3	0	0	0	0	0	0	1	0	0	1	4
Hourly Total	0	0	0	0	0	0	8	0	0	8	0	0	1	0	1	0	3	0	0	3	12
11:00 AM	0	0	0	0	0	0	1	0	0	1	0	0	0	0	0	0	0	0	0	0	1
11:15 AM	0	0	2	0	2	0	2	0	0	2	0	0	1	0	1	0	0	0	0	0	5
11:30 AM	0	0	0	0	0	1	2	0	0	3	0	0	0	0	0	0	2	0	0	2	5

11:45 AM	0	0	0	0	0	0	0	0	0	0	0	0	1	0	1	0	6	1	0	7	8
Hourly Total	0	0	2	0	2	1	5	0	0	6	0	0	2	0	2	0	8	1	0	9	19
12:00 PM	0	0	0	0	0	1	3	0	0	4	1	0	0	0	1	0	3	0	0	3	8
12:15 PM	0	0	0	0	0	0	2	0	0	2	0	0	0	0	0	0	1	0	0	1	3
12:30 PM	0	0	0	0	0	0	1	0	0	1	0	0	0	0	0	0	3	0	0	3	4
12:45 PM	0	0	0	0	0	0	5	2	0	7	0	0	0	0	0	0	3	0	0	3	10
Hourly Total	0	0	0	0	0	1	11	2	0	14	1	0	0	0	1	0	10	0	0	10	25
1:00 PM	0	0	0	0	0	0	0	0	0	0	0	0	0	0	0	0	1	0	0	1	1
1:15 PM	0	0	0	0	0	0	3	2	0	5	0	0	0	0	0	0	2	0	0	2	7
1:30 PM	0	0	0	0	0	0	1	1	0	2	1	1	0	0	2	0	2	0	0	2	6
1:45 PM	0	0	0	0	0	0	0	0	0	0	0	0	0	0	0	0	1	0	0	1	1
Hourly Total	0	0	0	0	0	0	4	3	0	7	1	1	0	0	2	0	6	0	0	6	15
2:00 PM	0	0	0	0	0	0	3	0	0	3	0	0	0	0	0	0	1	0	0	1	4
2:15 PM	0	0	0	0	0	0	1	0	0	1	0	0	0	0	0	0	1	0	0	1	2
2:30 PM	0	0	0	0	0	0	0	0	0	0	0	0	0	0	0	0	1	0	0	1	1
2:45 PM	0	0	0	0	0	0	4	0	0	4	0	0	0	0	0	0	0	0	0	0	4
Hourly Total	0	0	0	0	0	0	8	0	0	8	0	0	0	0	0	0	3	0	0	3	11
3:00 PM	0	0	0	0	0	0	1	1	0	2	0	0	2	0	2	0	1	0	0	1	5
3:15 PM	0	0	0	0	0	0	2	0	0	2	0	0	1	0	1	0	2	0	0	2	5
3:30 PM	0	0	0	0	0	0	4	0	0	4	0	0	0	0	0	0	3	0	0	3	7
3:45 PM	0	0	0	0	0	0	3	2	0	5	0	0	0	0	0	1	5	1	0	7	12
Hourly Total	0	0	0	0	0	0	10	3	0	13	0	0	3	0	3	1	11	1	0	13	29
4:00 PM	0	0	0	0	0	0	5	0	0	5	0	0	0	0	0	1	3	0	0	4	9
4:15 PM	1	0	0	0	1	0	1	0	0	1	0	2	0	0	2	0	2	0	0	2	6
4:30 PM	0	0	0	0	0	0	0	0	0	0	0	0	0	0	0	0	3	0	0	3	3
4:45 PM	0	0	0	0	0	0	2	0	0	2	0	0	0	0	0	0	3	0	0	3	5
Hourly Total	1	0	0	0	1	0	8	0	0	8	0	2	0	0	2	1	11	0	0	12	23
5:00 PM	0	0	0	0	0	0	0	0	0	0	0	0	0	0	0	1	4	0	0	5	5
5:15 PM	0	0	0	0	0	0	1	0	0	1	0	1	0	0	1	2	0	0	0	2	4
5:30 PM	0	0	0	0	0	0	1	0	0	1	0	0	0	0	0	0	1	0	0	1	2
5:45 PM	0	0	0	0	0	0	0	0	0	0	0	0	0	0	0	0	2	0	0	2	2
Hourly Total	0	0	0	0	0	0	2	0	0	2	0	1	0	0	1	3	7	0	0	10	13
Grand Total	3	1	2	0	6	2	108	11	0	121	3	6	14	0	23	15	103	7	1	126	276
Approach %	50.0	16.7	33.3	0.0	-	1.7	89.3	9.1	0.0	-	13.0	26.1	60.9	0.0	-	11.9	81.7	5.6	0.8	-	-
Total %	1.1	0.4	0.7	0.0	2.2	0.7	39.1	4.0	0.0	43.8	1.1	2.2	5.1	0.0	8.3	5.4	37.3	2.5	0.4	45.7	-
Lights	3	1	2	0	6	2	105	10	0	117	3	4	11	0	18	12	100	7	1	120	261
% Lights	100.0	100.0	100.0	-	100.0	100.0	97.2	90.9	-	96.7	100.0	66.7	78.6	-	78.3	80.0	97.1	100.0	100.0	95.2	94.6
Other Vehicles	0	0	0	0	0	0	3	1	0	4	0	2	3	0	5	3	3	0	0	6	15
% Other Vehicles	0.0	0.0	0.0	-	0.0	0.0	2.8	9.1	-	3.3	0.0	33.3	21.4	-	21.7	20.0	2.9	0.0	0.0	4.8	5.4

Stantec Consulting Ltd.
300 - 1919 Rose St

Regina, Saskatchewan, Canada S4P 3P1
306 781 6400 erin.harms@stantec.com

Count Name: T9 (Baker Rd & Range Rd 3045)
Site Code:
Start Date: 05-25-2023
Page No: 4

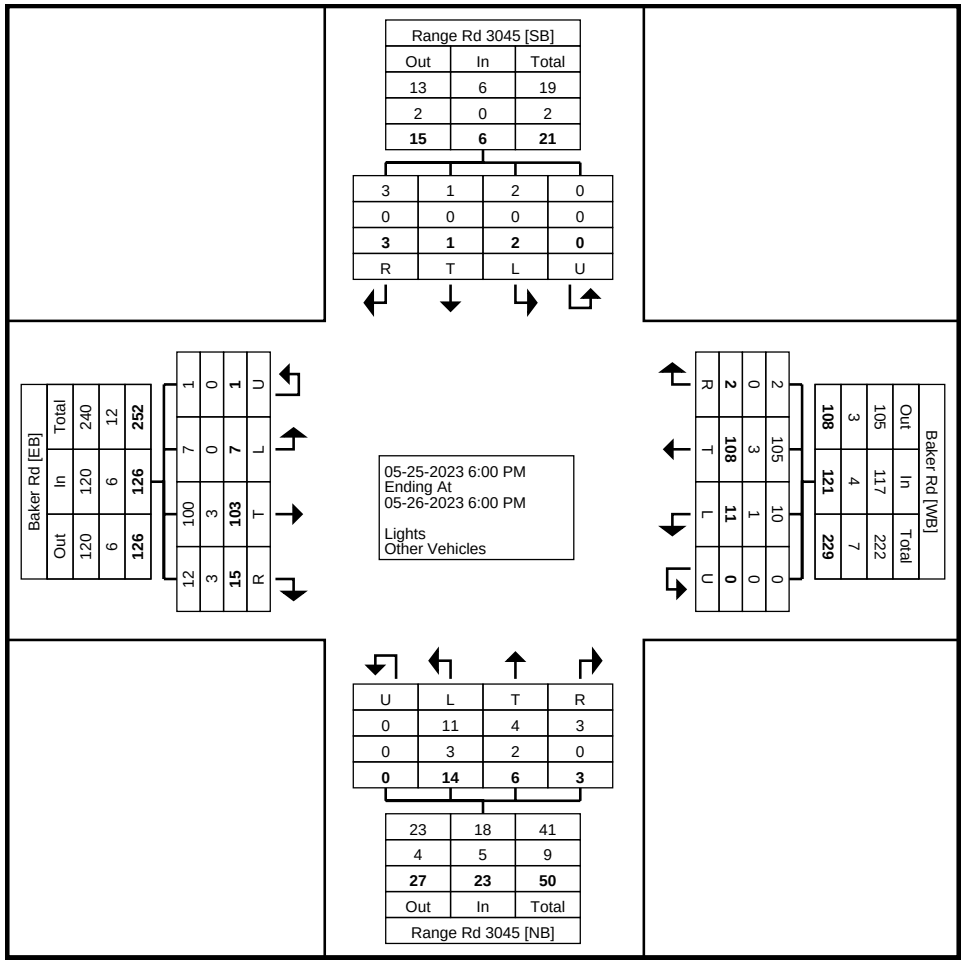

Turning Movement Data Plot

Stantec Consulting Ltd.
300 - 1919 Rose St

Regina, Saskatchewan, Canada S4P 3P1
306 781 6400 erin.harms@stantec.com

Count Name: T9 (Baker Rd & Range Rd 3045)
Site Code:
Start Date: 05-25-2023

Turning Movement Peak Hour Data (6:00 PM)

Start Time	Range Rd 3045 Southbound					Baker Rd Westbound					Range Rd 3045 Northbound					Baker Rd Eastbound					
	Right	Thru	Left	U-Turn	App. Total	Right	Thru	Left	U-Turn	App. Total	Right	Thru	Left	U-Turn	App. Total	Right	Thru	Left	U-Turn	App. Total	Int. Total
6:00 PM	0	0	0	0	0	0	3	0	0	3	0	0	0	0	0	1	3	1	0	5	8
6:15 PM	0	0	0	0	0	0	5	1	0	6	0	0	0	0	0	0	1	1	0	2	8
6:30 PM	0	0	0	0	0	0	4	0	0	4	0	0	0	0	0	0	2	0	0	2	6
6:45 PM	0	0	0	0	0	0	3	0	0	3	0	0	0	0	0	0	0	0	0	0	3
Total	0	0	0	0	0	0	15	1	0	16	0	0	0	0	0	1	6	2	0	9	25
Approach %	0.0	0.0	0.0	0.0	-	0.0	93.8	6.3	0.0	-	0.0	0.0	0.0	0.0	-	11.1	66.7	22.2	0.0	-	-
Total %	0.0	0.0	0.0	0.0	0.0	0.0	60.0	4.0	0.0	64.0	0.0	0.0	0.0	0.0	0.0	4.0	24.0	8.0	0.0	36.0	-
PHF	0.000	0.000	0.000	0.000	0.000	0.000	0.750	0.250	0.000	0.667	0.000	0.000	0.000	0.000	0.000	0.250	0.500	0.500	0.000	0.450	0.781
Lights	0	0	0	0	0	0	15	1	0	16	0	0	0	0	0	1	6	2	0	9	25
% Lights	-	-	-	-	-	-	100.0	100.0	-	100.0	-	-	-	-	-	100.0	100.0	100.0	-	100.0	100.0
Other Vehicles	0	0	0	0	0	0	0	0	0	0	0	0	0	0	0	0	0	0	0	0	0
% Other Vehicles	-	-	-	-	-	-	0.0	0.0	-	0.0	-	-	-	-	-	0.0	0.0	0.0	-	0.0	0.0

Stantec Consulting Ltd.
300 - 1919 Rose St

Regina, Saskatchewan, Canada S4P 3P1
306 781 6400 erin.harms@stantec.com

Count Name: T9 (Baker Rd & Range Rd 3045)
Site Code:
Start Date: 05-25-2023

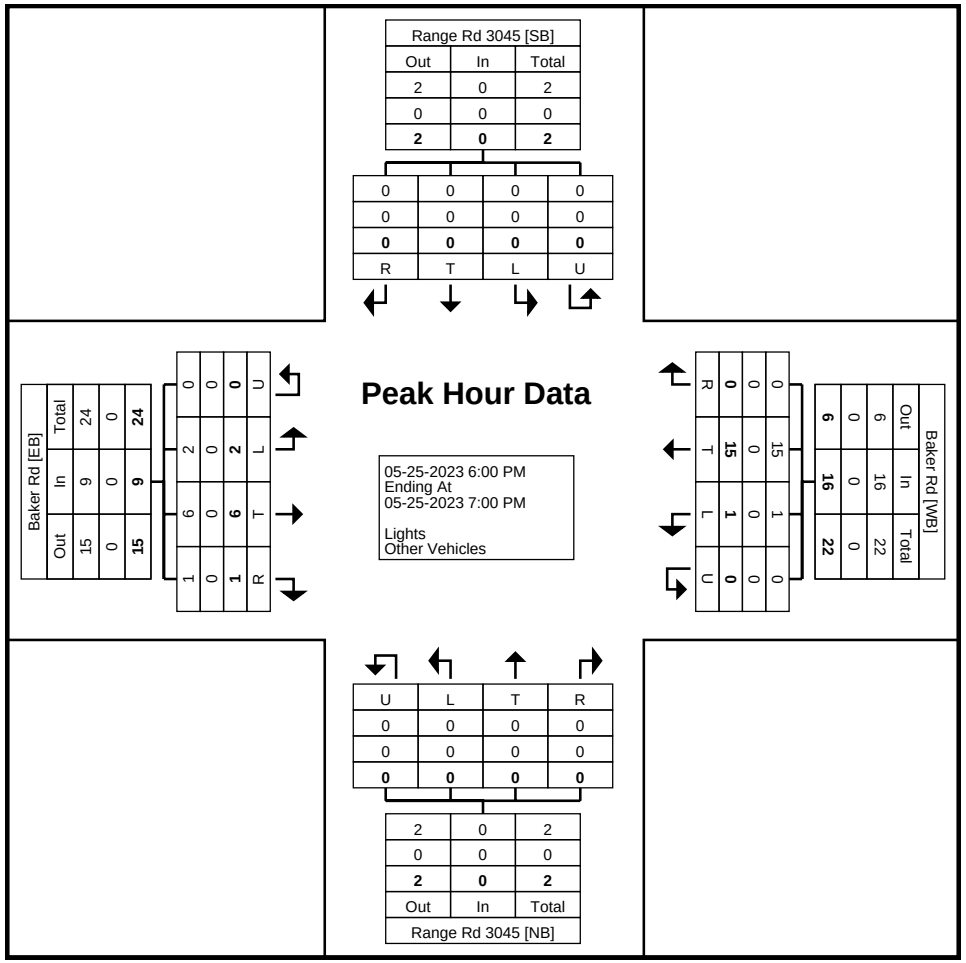

Turning Movement Peak Hour Data Plot (6:00 PM)

Stantec Consulting Ltd.
300 - 1919 Rose St

Regina, Saskatchewan, Canada S4P 3P1
306 781 6400 erin.harms@stantec.com

Count Name: T9 (Baker Rd & Range Rd 3045)
Site Code:
Start Date: 05-25-2023

Turning Movement Peak Hour Data (8:30 AM)

Start Time	Range Rd 3045 Southbound					Baker Rd Westbound					Range Rd 3045 Northbound					Baker Rd Eastbound					
	Right	Thru	Left	U-Turn	App. Total	Right	Thru	Left	U-Turn	App. Total	Right	Thru	Left	U-Turn	App. Total	Right	Thru	Left	U-Turn	App. Total	Int. Total
8:30 AM	0	0	0	0	0	0	3	0	0	3	0	1	2	0	3	0	3	0	0	3	9
8:45 AM	0	0	0	0	0	0	0	0	0	0	0	0	0	0	0	2	2	0	0	4	4
9:00 AM	0	0	0	0	0	0	3	0	0	3	0	0	0	0	0	0	2	0	0	2	5
9:15 AM	0	0	0	0	0	0	5	0	0	5	0	0	0	0	0	0	3	0	0	3	8
Total	0	0	0	0	0	0	11	0	0	11	0	1	2	0	3	2	10	0	0	12	26
Approach %	0.0	0.0	0.0	0.0	-	0.0	100.0	0.0	0.0	-	0.0	33.3	66.7	0.0	-	16.7	83.3	0.0	0.0	-	-
Total %	0.0	0.0	0.0	0.0	0.0	0.0	42.3	0.0	0.0	42.3	0.0	3.8	7.7	0.0	11.5	7.7	38.5	0.0	0.0	46.2	-
PHF	0.000	0.000	0.000	0.000	0.000	0.000	0.550	0.000	0.000	0.550	0.000	0.250	0.250	0.000	0.250	0.250	0.833	0.000	0.000	0.750	0.722
Lights	0	0	0	0	0	0	11	0	0	11	0	1	2	0	3	1	9	0	0	10	24
% Lights	-	-	-	-	-	-	100.0	-	-	100.0	-	100.0	100.0	-	100.0	50.0	90.0	-	-	83.3	92.3
Other Vehicles	0	0	0	0	0	0	0	0	0	0	0	0	0	0	0	1	1	0	0	2	2
% Other Vehicles	-	-	-	-	-	-	0.0	-	-	0.0	-	0.0	0.0	-	0.0	50.0	10.0	-	-	16.7	7.7

Stantec Consulting Ltd.
300 - 1919 Rose St

Regina, Saskatchewan, Canada S4P 3P1
306 781 6400 erin.harms@stantec.com

Count Name: T9 (Baker Rd & Range Rd 3045)
Site Code:
Start Date: 05-25-2023

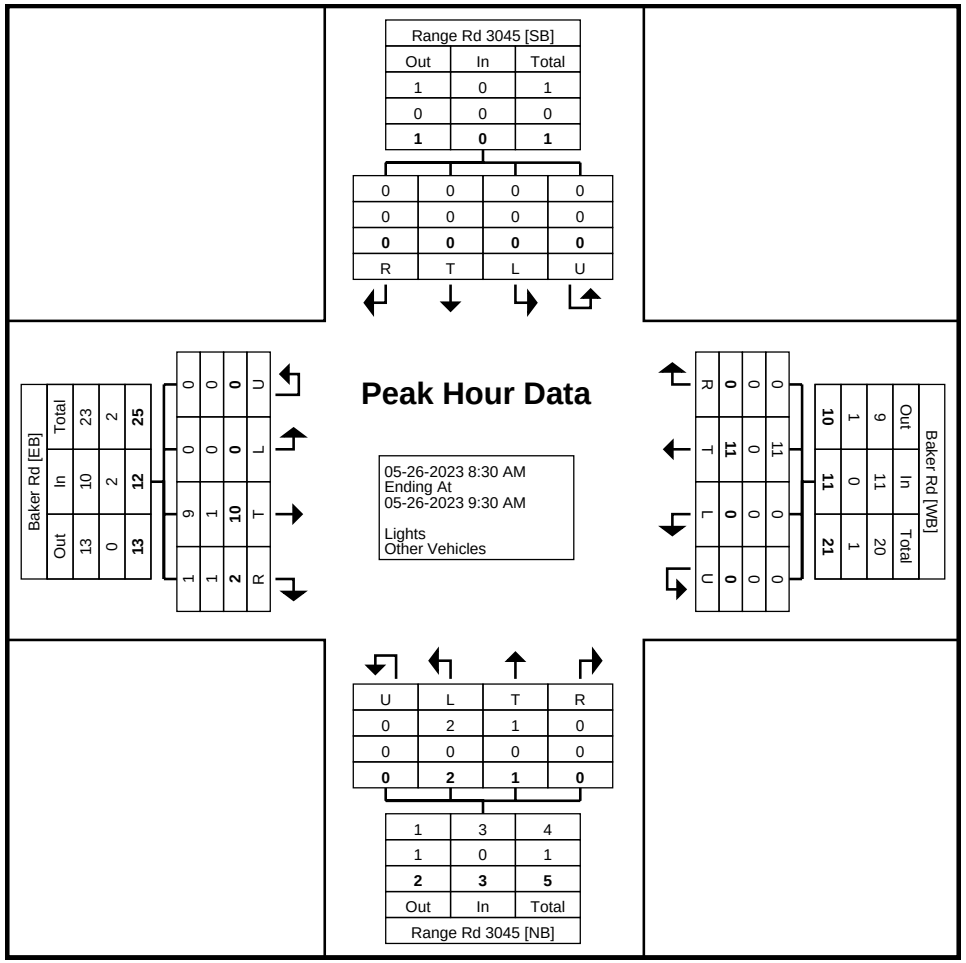

Turning Movement Peak Hour Data Plot (8:30 AM)

Stantec Consulting Ltd.
300 - 1919 Rose St

Regina, Saskatchewan, Canada S4P 3P1
306 781 6400 erin.harms@stantec.com

Count Name: T9 (Baker Rd & Range Rd 3045)
Site Code:
Start Date: 05-25-2023

Turning Movement Peak Hour Data (3:30 PM)

Start Time	Range Rd 3045 Southbound					Baker Rd Westbound					Range Rd 3045 Northbound					Baker Rd Eastbound					
	Right	Thru	Left	U-Turn	App. Total	Right	Thru	Left	U-Turn	App. Total	Right	Thru	Left	U-Turn	App. Total	Right	Thru	Left	U-Turn	App. Total	Int. Total
3:30 PM	0	0	0	0	0	0	4	0	0	4	0	0	0	0	0	0	3	0	0	3	7
3:45 PM	0	0	0	0	0	0	3	2	0	5	0	0	0	0	0	1	5	1	0	7	12
4:00 PM	0	0	0	0	0	0	5	0	0	5	0	0	0	0	0	1	3	0	0	4	9
4:15 PM	1	0	0	0	1	0	1	0	0	1	0	2	0	0	2	0	2	0	0	2	6
Total	1	0	0	0	1	0	13	2	0	15	0	2	0	0	2	2	13	1	0	16	34
Approach %	100.0	0.0	0.0	0.0	-	0.0	86.7	13.3	0.0	-	0.0	100.0	0.0	0.0	-	12.5	81.3	6.3	0.0	-	-
Total %	2.9	0.0	0.0	0.0	2.9	0.0	38.2	5.9	0.0	44.1	0.0	5.9	0.0	0.0	5.9	5.9	38.2	2.9	0.0	47.1	-
PHF	0.250	0.000	0.000	0.000	0.250	0.000	0.650	0.250	0.000	0.750	0.000	0.250	0.000	0.000	0.250	0.500	0.650	0.250	0.000	0.571	0.708
Lights	1	0	0	0	1	0	13	2	0	15	0	1	0	0	1	1	13	1	0	15	32
% Lights	100.0	-	-	-	100.0	-	100.0	100.0	-	100.0	-	50.0	-	-	50.0	50.0	100.0	100.0	-	93.8	94.1
Other Vehicles	0	0	0	0	0	0	0	0	0	0	0	1	0	0	1	1	0	0	0	1	2
% Other Vehicles	0.0	-	-	-	0.0	-	0.0	0.0	-	0.0	-	50.0	-	-	50.0	50.0	0.0	0.0	-	6.3	5.9

Stantec Consulting Ltd.
300 - 1919 Rose St

Regina, Saskatchewan, Canada S4P 3P1
306 781 6400 erin.harms@stantec.com

Count Name: T9 (Baker Rd & Range Rd 3045)
Site Code:
Start Date: 05-25-2023

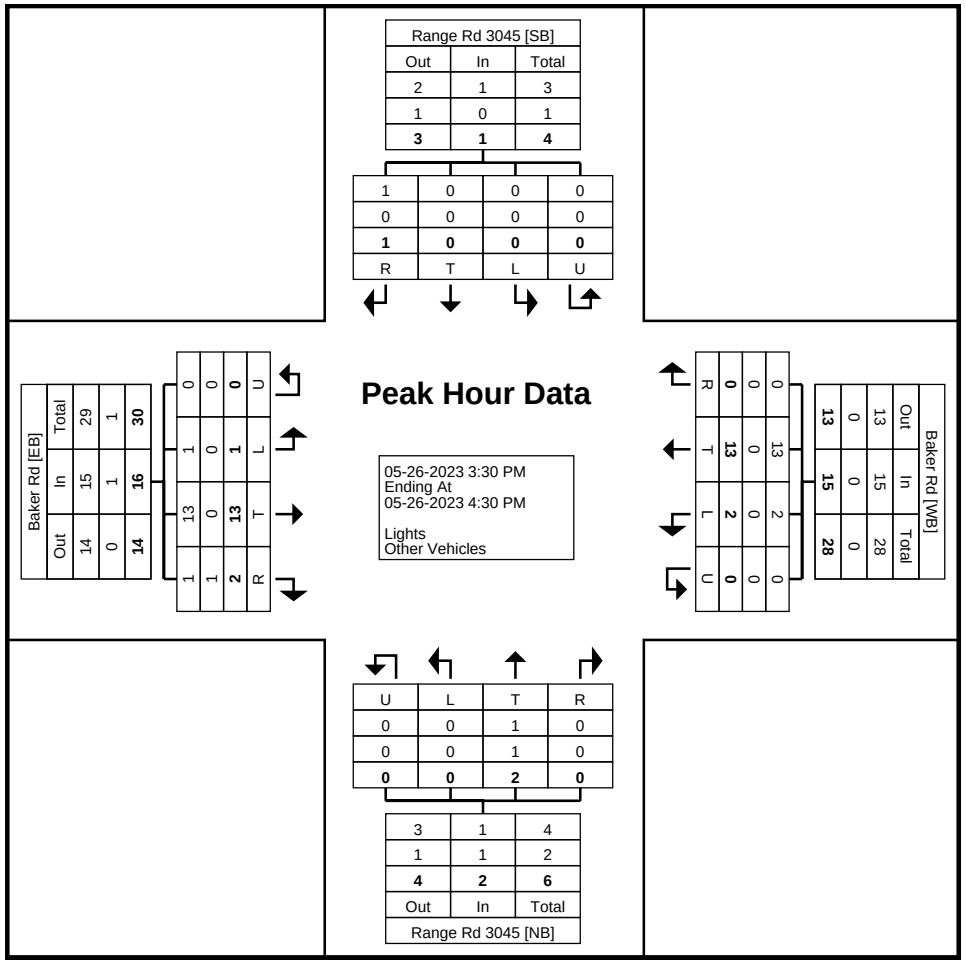

Turning Movement Peak Hour Data Plot (3:30 PM)

Stantec Consulting Ltd.
300 - 1919 Rose St

Regina, Saskatchewan, Canada S4P 3P1
306 781 6400 erin.harms@stantec.com

Count Name: T10 (Prairie View Rd & Louis Riel Trail)
Site Code:
Start Date: 06-06-2023

Turning Movement Data

Start Time	Prairie View Rd Southbound					Louis Riel Trail Westbound					Prairie View Rd Northbound					Louis Riel Trail Eastbound					
	Right	Thru	Left	U-Turn	App. Total	Right	Thru	Left	U-Turn	App. Total	Right	Thru	Left	U-Turn	App. Total	Right	Thru	Left	U-Turn	App. Total	Int. Total
4:00 PM	0	0	0	0	0	0	126	0	0	126	1	1	1	0	3	1	107	0	0	108	237
4:15 PM	0	0	0	0	0	0	121	0	0	121	1	0	0	0	1	0	147	0	0	147	269
4:30 PM	0	0	0	0	0	0	112	0	0	112	0	0	0	0	0	0	153	1	0	154	266
4:45 PM	0	0	0	0	0	0	126	0	0	126	0	1	0	0	1	2	128	0	0	130	257
Hourly Total	0	0	0	0	0	0	485	0	0	485	2	2	1	0	5	3	535	1	0	539	1029
5:00 PM	0	0	0	0	0	0	109	0	0	109	0	0	0	0	0	0	185	0	0	185	294
5:15 PM	0	0	0	0	0	1	128	0	0	129	0	0	0	0	0	0	133	0	0	133	262
5:30 PM	0	0	0	0	0	0	110	0	0	110	0	0	0	0	0	1	156	0	0	157	267
5:45 PM	0	0	0	0	0	0	102	0	0	102	0	0	0	0	0	0	137	0	0	137	239
Hourly Total	0	0	0	0	0	1	449	0	0	450	0	0	0	0	0	1	611	0	0	612	1062
6:00 PM	0	0	0	0	0	0	100	0	0	100	0	0	1	0	1	0	127	0	0	127	228
6:15 PM	0	0	0	0	0	0	90	0	0	90	0	1	1	0	2	0	100	0	0	100	192
6:30 PM	2	0	0	0	2	0	90	0	0	90	0	0	0	0	0	0	105	0	0	105	197
6:45 PM	0	0	0	0	0	0	89	0	0	89	0	0	0	0	0	0	97	0	0	97	186
Hourly Total	2	0	0	0	2	0	369	0	0	369	0	1	2	0	3	0	429	0	0	429	803
7:00 PM	0	0	0	0	0	0	73	0	0	73	0	0	0	0	0	0	84	0	0	84	157
7:15 PM	0	0	0	0	0	0	71	0	0	71	0	0	0	0	0	0	73	0	0	73	144
7:30 PM	0	0	0	0	0	0	65	0	0	65	0	0	0	0	0	0	87	0	0	87	152
7:45 PM	0	0	0	0	0	0	45	0	0	45	0	0	0	0	0	0	63	1	0	64	109
Hourly Total	0	0	0	0	0	0	254	0	0	254	0	0	0	0	0	0	307	1	0	308	562
8:00 PM	0	0	0	0	0	0	62	0	0	62	0	0	0	0	0	0	71	0	0	71	133
8:15 PM	0	0	0	0	0	0	49	0	0	49	0	0	0	0	0	0	76	0	0	76	125
8:30 PM	0	0	0	0	0	0	58	0	0	58	0	0	0	0	0	0	62	0	0	62	120
8:45 PM	0	0	0	0	0	0	35	0	0	35	0	0	0	0	0	0	65	0	0	65	100
Hourly Total	0	0	0	0	0	0	204	0	0	204	0	0	0	0	0	0	274	0	0	274	478
9:00 PM	0	0	0	0	0	0	41	0	0	41	0	0	0	0	0	0	74	0	0	74	115
9:15 PM	0	0	0	0	0	0	58	0	0	58	0	0	0	0	0	0	67	0	0	67	125
9:30 PM	0	0	0	0	0	0	47	0	0	47	0	0	0	0	0	0	47	0	0	47	94
9:45 PM	0	0	0	0	0	0	50	0	0	50	0	0	0	0	0	0	30	0	0	30	80
Hourly Total	0	0	0	0	0	0	196	0	0	196	0	0	0	0	0	0	218	0	0	218	414
10:00 PM	0	0	0	0	0	0	36	0	0	36	0	0	0	0	0	0	38	0	0	38	74
10:15 PM	0	0	0	0	0	0	33	0	0	33	0	0	0	0	0	0	37	0	0	37	70
10:30 PM	0	0	0	0	0	0	27	0	0	27	0	0	0	0	0	1	27	0	0	28	55
10:45 PM	0	0	0	0	0	0	26	0	0	26	0	0	0	0	0	0	19	0	0	19	45
Hourly Total	0	0	0	0	0	0	122	0	0	122	0	0	0	0	0	1	121	0	0	122	244
11:00 PM	0	0	0	0	0	0	16	0	0	16	0	0	0	0	0	0	12	0	0	12	28

11:15 PM	0	0	0	0	0	0	13	0	0	13	0	0	0	0	0	0	8	0	0	8	21
11:30 PM	0	0	0	0	0	0	16	0	0	16	0	0	0	0	0	0	9	0	0	9	25
11:45 PM	0	0	0	0	0	0	14	0	0	14	0	0	0	0	0	0	9	0	0	9	23
Hourly Total	0	0	0	0	0	0	59	0	0	59	0	0	0	0	0	0	38	0	0	38	97
12:00 AM	0	0	0	0	0	0	11	0	0	11	0	0	0	0	0	0	14	0	0	14	25
12:15 AM	0	0	0	0	0	0	13	0	0	13	0	0	0	0	0	0	10	0	0	10	23
12:30 AM	0	0	0	0	0	0	6	0	0	6	0	0	0	0	0	0	10	0	0	10	16
12:45 AM	0	0	0	0	0	0	11	0	0	11	0	0	0	0	0	0	11	0	0	11	22
Hourly Total	0	0	0	0	0	0	41	0	0	41	0	0	0	0	0	0	45	0	0	45	86
1:00 AM	0	0	0	0	0	0	8	0	0	8	0	0	0	0	0	0	5	0	0	5	13
1:15 AM	0	0	0	0	0	0	5	0	0	5	0	0	0	0	0	0	8	0	0	8	13
1:30 AM	0	0	0	0	0	0	12	0	0	12	0	0	0	0	0	0	11	0	0	11	23
1:45 AM	0	0	0	0	0	0	8	0	0	8	0	0	0	0	0	0	11	0	0	11	19
Hourly Total	0	0	0	0	0	0	33	0	0	33	0	0	0	0	0	0	35	0	0	35	68
2:00 AM	0	0	0	0	0	0	6	0	0	6	0	0	0	0	0	0	5	0	0	5	11
2:15 AM	0	0	0	0	0	0	10	0	0	10	0	0	0	0	0	0	6	0	0	6	16
2:30 AM	0	0	0	0	0	0	11	0	0	11	0	0	0	0	0	0	9	0	0	9	20
2:45 AM	0	0	0	0	0	0	3	0	0	3	0	0	0	0	0	0	3	0	0	3	6
Hourly Total	0	0	0	0	0	0	30	0	0	30	0	0	0	0	0	0	23	0	0	23	53
3:00 AM	0	0	0	0	0	0	9	0	0	9	0	0	0	0	0	0	7	0	0	7	16
3:15 AM	0	0	0	0	0	0	2	0	0	2	0	0	0	0	0	0	7	0	0	7	9
3:30 AM	0	0	0	0	0	0	7	0	0	7	0	0	0	0	0	0	12	0	0	12	19
3:45 AM	0	0	0	0	0	0	3	0	0	3	0	0	0	0	0	0	7	0	0	7	10
Hourly Total	0	0	0	0	0	0	21	0	0	21	0	0	0	0	0	0	33	0	0	33	54
4:00 AM	0	0	0	0	0	0	8	0	0	8	0	0	0	0	0	0	14	0	0	14	22
4:15 AM	0	0	0	0	0	0	6	0	0	6	0	0	0	0	0	0	9	0	0	9	15
4:30 AM	0	0	0	0	0	0	11	0	0	11	0	1	1	0	2	0	6	0	0	6	19
4:45 AM	0	0	0	0	0	0	6	0	0	6	0	0	0	0	0	0	14	0	0	14	20
Hourly Total	0	0	0	0	0	0	31	0	0	31	0	1	1	0	2	0	43	0	0	43	76
5:00 AM	0	0	0	0	0	0	10	0	0	10	0	0	0	0	0	0	16	0	0	16	26
5:15 AM	0	0	0	0	0	0	23	0	0	23	0	0	0	0	0	0	15	0	0	15	38
5:30 AM	0	0	0	0	0	1	30	0	0	31	0	0	0	0	0	0	26	0	0	26	57
5:45 AM	0	0	0	0	0	0	31	0	0	31	0	0	0	0	0	0	33	0	0	33	64
Hourly Total	0	0	0	0	0	1	94	0	0	95	0	0	0	0	0	0	90	0	0	90	185
6:00 AM	0	0	0	0	0	0	37	0	0	37	0	0	0	0	0	0	32	0	0	32	69
6:15 AM	0	0	0	0	0	0	48	0	0	48	0	0	0	0	0	0	46	0	0	46	94
6:30 AM	0	0	0	0	0	0	77	0	0	77	0	0	2	0	2	1	35	0	0	36	115
6:45 AM	0	0	0	0	0	0	79	0	0	79	0	0	0	0	0	0	79	0	1	80	159
Hourly Total	0	0	0	0	0	0	241	0	0	241	0	0	2	0	2	1	192	0	1	194	437
7:00 AM	0	0	0	0	0	0	91	0	0	91	0	0	0	0	0	0	70	0	0	70	161
7:15 AM	0	0	0	0	0	0	110	0	0	110	0	0	0	0	0	0	93	0	0	93	203
7:30 AM	0	0	0	0	0	0	105	0	0	105	0	0	0	0	0	0	105	0	0	105	210
7:45 AM	0	0	0	0	0	0	115	0	0	115	0	0	0	0	0	0	92	0	0	92	207
Hourly Total	0	0	0	0	0	0	421	0	0	421	0	0	0	0	0	0	360	0	0	360	781
8:00 AM	0	0	0	0	0	0	113	0	0	113	0	0	2	0	2	0	84	0	0	84	199
8:15 AM	0	0	0	0	0	0	121	0	0	121	0	0	0	0	0	0	103	0	0	103	224
8:30 AM	1	0	0	0	1	0	114	0	0	114	0	0	1	0	1	1	86	0	0	87	203
8:45 AM	0	0	0	0	0	0	88	0	0	88	0	0	1	0	1	2	89	0	0	91	180
Hourly Total	1	0	0	0	1	0	436	0	0	436	0	0	4	0	4	3	362	0	0	365	806
9:00 AM	0	0	0	0	0	0	93	0	0	93	0	1	0	0	1	0	106	0	0	106	200
9:15 AM	0	0	0	0	0	0	79	0	0	79	0	0	0	0	0	0	80	0	0	80	159
9:30 AM	0	1	0	0	1	0	93	0	0	93	0	0	0	0	0	1	92	0	0	93	187

9:45 AM	0	0	0	0	0	0	73	0	0	73	0	0	0	0	0	4	93	0	0	97	170
Hourly Total	0	1	0	0	1	0	338	0	0	338	0	1	0	0	1	5	371	0	0	376	716
10:00 AM	0	0	0	0	0	0	82	0	0	82	0	0	0	0	0	1	74	0	0	75	157
10:15 AM	0	0	0	0	0	0	91	0	0	91	0	0	1	0	1	0	71	0	0	71	163
10:30 AM	0	0	0	0	0	0	99	0	0	99	0	0	1	0	1	0	79	0	0	79	179
10:45 AM	0	0	0	0	0	0	101	0	0	101	0	0	1	0	1	0	82	0	0	82	184
Hourly Total	0	0	0	0	0	0	373	0	0	373	0	0	3	0	3	1	306	0	0	307	683
11:00 AM	0	0	0	0	0	0	97	0	0	97	0	0	0	0	0	0	73	0	0	73	170
11:15 AM	0	0	0	0	0	0	93	0	0	93	0	0	0	0	0	1	59	0	0	60	153
11:30 AM	0	0	0	0	0	0	90	0	0	90	0	0	0	0	0	0	80	1	0	81	171
11:45 AM	0	0	0	0	0	0	85	0	0	85	0	0	1	0	1	0	83	1	0	84	170
Hourly Total	0	0	0	0	0	0	365	0	0	365	0	0	1	0	1	1	295	2	0	298	664
12:00 PM	0	0	0	0	0	0	96	0	0	96	0	0	1	0	1	0	83	0	0	83	180
12:15 PM	0	0	0	0	0	0	65	0	0	65	0	0	1	0	1	0	89	0	0	89	155
12:30 PM	0	0	0	0	0	0	84	0	0	84	0	0	0	0	0	0	84	0	0	84	168
12:45 PM	0	0	0	0	0	0	87	0	0	87	0	0	0	0	0	1	75	0	0	76	163
Hourly Total	0	0	0	0	0	0	332	0	0	332	0	0	2	0	2	1	331	0	0	332	666
1:00 PM	0	0	0	0	0	0	80	0	0	80	0	0	0	0	0	0	81	0	0	81	161
1:15 PM	0	0	0	0	0	1	89	0	0	90	0	0	0	0	0	1	79	0	0	80	170
1:30 PM	1	0	0	0	1	0	86	0	0	86	0	0	0	0	0	0	93	0	0	93	180
1:45 PM	0	0	0	0	0	0	93	0	0	93	0	0	1	0	1	0	83	0	0	83	177
Hourly Total	1	0	0	0	1	1	348	0	0	349	0	0	1	0	1	1	336	0	0	337	688
2:00 PM	0	0	0	0	0	0	90	0	0	90	0	1	1	0	2	1	96	0	0	97	189
2:15 PM	0	0	1	0	1	0	75	0	0	75	0	0	0	0	0	2	98	0	0	100	176
2:30 PM	1	0	0	0	1	0	91	0	0	91	0	0	0	0	0	0	117	0	0	117	209
2:45 PM	0	0	0	0	0	0	97	0	0	97	0	0	0	0	0	0	100	0	0	100	197
Hourly Total	1	0	1	0	2	0	353	0	0	353	0	1	1	0	2	3	411	0	0	414	771
3:00 PM	0	0	1	0	1	0	124	0	0	124	1	0	0	0	1	0	113	0	0	113	239
3:15 PM	0	0	1	0	1	0	96	0	0	96	0	0	1	0	1	0	127	0	0	127	225
3:30 PM	0	0	0	0	0	0	91	0	0	91	0	0	0	0	0	0	114	0	0	114	205
3:45 PM	0	0	0	0	0	0	106	0	0	106	0	0	2	0	2	0	155	0	0	155	263
Hourly Total	0	0	2	0	2	0	417	0	0	417	1	0	3	0	4	0	509	0	0	509	932
Grand Total	5	1	3	0	9	3	6012	0	0	6015	3	6	21	0	30	21	6275	4	1	6301	12355
Approach %	55.6	11.1	33.3	0.0	-	0.0	100.0	0.0	0.0	-	10.0	20.0	70.0	0.0	-	0.3	99.6	0.1	0.0	-	-
Total %	0.0	0.0	0.0	0.0	0.1	0.0	48.7	0.0	0.0	48.7	0.0	0.0	0.2	0.0	0.2	0.2	50.8	0.0	0.0	51.0	-
Lights	5	1	3	0	9	3	5000	0	0	5003	3	6	21	0	30	21	5138	4	1	5164	10206
% Lights	100.0	100.0	100.0	-	100.0	100.0	83.2	-	-	83.2	100.0	100.0	100.0	-	100.0	100.0	81.9	100.0	100.0	82.0	82.6
Other Vehicles	0	0	0	0	0	0	1012	0	0	1012	0	0	0	0	0	0	1137	0	0	1137	2149
% Other Vehicles	0.0	0.0	0.0	-	0.0	0.0	16.8	-	-	16.8	0.0	0.0	0.0	-	0.0	0.0	18.1	0.0	0.0	18.0	17.4

Stantec Consulting Ltd.
300 - 1919 Rose St

Regina, Saskatchewan, Canada S4P 3P1
306 781 6400 erin.harms@stantec.com

Count Name: T10 (Prairie View Rd & Louis Riel Trail)
Site Code:
Start Date: 06-06-2023
Page No: 4

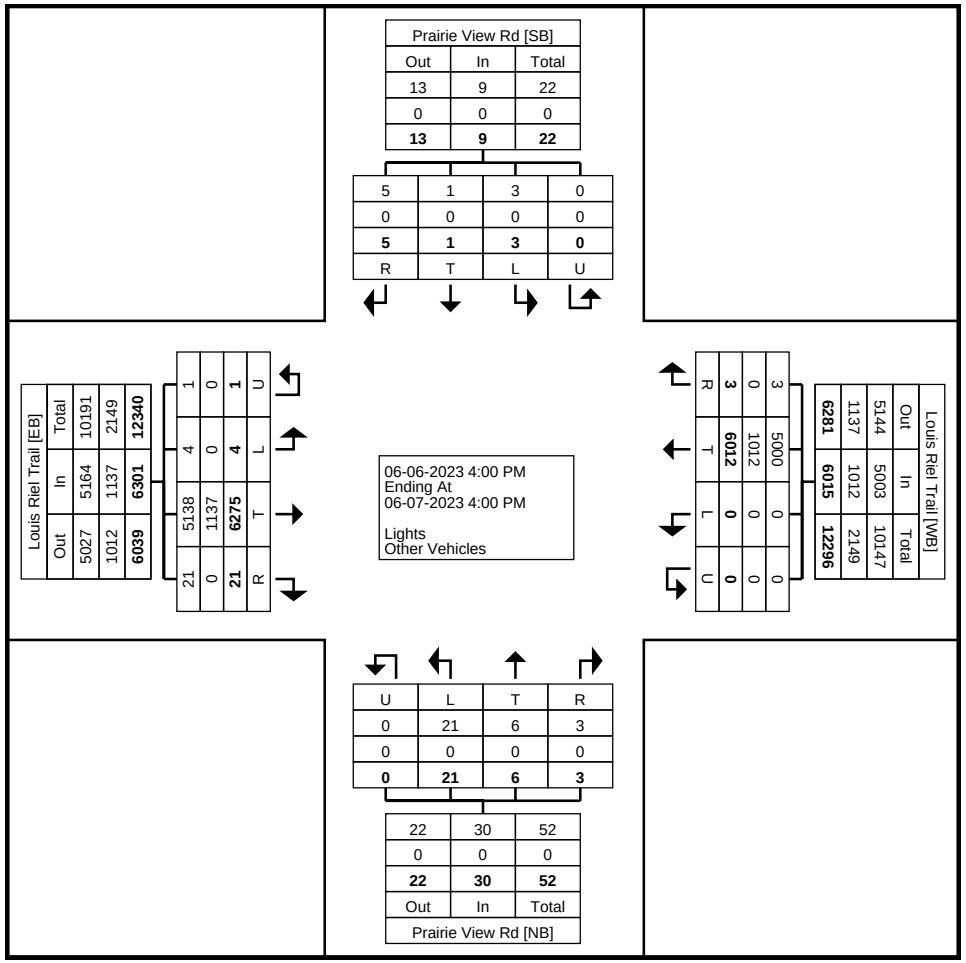

Turning Movement Data Plot

Stantec Consulting Ltd.
300 - 1919 Rose St

Regina, Saskatchewan, Canada S4P 3P1
306 781 6400 erin.harms@stantec.com

Count Name: T10 (Prairie View Rd & Louis Riel Trail)
Site Code:
Start Date: 06-06-2023

Turning Movement Peak Hour Data (4:15 PM)

Start Time	Prairie View Rd Southbound					Louis Riel Trail Westbound					Prairie View Rd Northbound					Louis Riel Trail Eastbound					
	Right	Thru	Left	U-Turn	App. Total	Right	Thru	Left	U-Turn	App. Total	Right	Thru	Left	U-Turn	App. Total	Right	Thru	Left	U-Turn	App. Total	Int. Total
4:15 PM	0	0	0	0	0	0	121	0	0	121	1	0	0	0	1	0	147	0	0	147	269
4:30 PM	0	0	0	0	0	0	112	0	0	112	0	0	0	0	0	0	153	1	0	154	266
4:45 PM	0	0	0	0	0	0	126	0	0	126	0	1	0	0	1	2	128	0	0	130	257
5:00 PM	0	0	0	0	0	0	109	0	0	109	0	0	0	0	0	0	185	0	0	185	294
Total	0	0	0	0	0	0	468	0	0	468	1	1	0	0	2	2	613	1	0	616	1086
Approach %	0.0	0.0	0.0	0.0	-	0.0	100.0	0.0	0.0	-	50.0	50.0	0.0	0.0	-	0.3	99.5	0.2	0.0	-	-
Total %	0.0	0.0	0.0	0.0	0.0	0.0	43.1	0.0	0.0	43.1	0.1	0.1	0.0	0.0	0.2	0.2	56.4	0.1	0.0	56.7	-
PHF	0.000	0.000	0.000	0.000	0.000	0.000	0.929	0.000	0.000	0.929	0.250	0.250	0.000	0.000	0.500	0.250	0.828	0.250	0.000	0.832	0.923
Lights	0	0	0	0	0	0	417	0	0	417	1	1	0	0	2	2	546	1	0	549	968
% Lights	-	-	-	-	-	-	89.1	-	-	89.1	100.0	100.0	-	-	100.0	100.0	89.1	100.0	-	89.1	89.1
Other Vehicles	0	0	0	0	0	0	51	0	0	51	0	0	0	0	0	0	67	0	0	67	118
% Other Vehicles	-	-	-	-	-	-	10.9	-	-	10.9	0.0	0.0	-	-	0.0	0.0	10.9	0.0	-	10.9	10.9

Stantec Consulting Ltd.
300 - 1919 Rose St

Regina, Saskatchewan, Canada S4P 3P1
306 781 6400 erin.harms@stantec.com

Count Name: T10 (Prairie View Rd & Louis Riel Trail)
Site Code:
Start Date: 06-06-2023

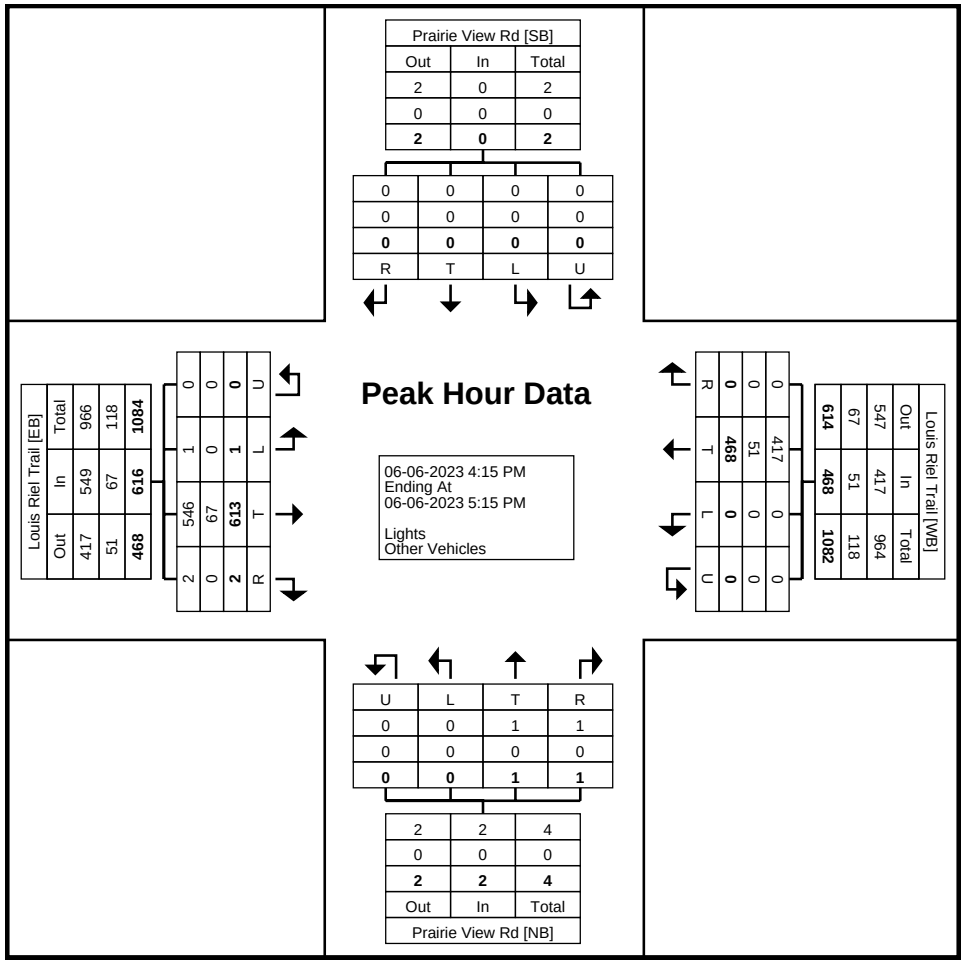

Turning Movement Peak Hour Data Plot (4:15 PM)

Stantec Consulting Ltd.
300 - 1919 Rose St

Regina, Saskatchewan, Canada S4P 3P1
306 781 6400 erin.harms@stantec.com

Count Name: T10 (Prairie View Rd & Louis Riel Trail)
Site Code:
Start Date: 06-06-2023

Turning Movement Peak Hour Data (7:30 AM)

Start Time	Prairie View Rd Southbound					Louis Riel Trail Westbound					Prairie View Rd Northbound					Louis Riel Trail Eastbound					
	Right	Thru	Left	U-Turn	App. Total	Right	Thru	Left	U-Turn	App. Total	Right	Thru	Left	U-Turn	App. Total	Right	Thru	Left	U-Turn	App. Total	Int. Total
7:30 AM	0	0	0	0	0	0	105	0	0	105	0	0	0	0	0	0	105	0	0	105	210
7:45 AM	0	0	0	0	0	0	115	0	0	115	0	0	0	0	0	0	92	0	0	92	207
8:00 AM	0	0	0	0	0	0	113	0	0	113	0	0	2	0	2	0	84	0	0	84	199
8:15 AM	0	0	0	0	0	0	121	0	0	121	0	0	0	0	0	0	103	0	0	103	224
Total	0	0	0	0	0	0	454	0	0	454	0	0	2	0	2	0	384	0	0	384	840
Approach %	0.0	0.0	0.0	0.0	-	0.0	100.0	0.0	0.0	-	0.0	0.0	100.0	0.0	-	0.0	100.0	0.0	0.0	-	-
Total %	0.0	0.0	0.0	0.0	0.0	0.0	54.0	0.0	0.0	54.0	0.0	0.0	0.2	0.0	0.2	0.0	45.7	0.0	0.0	45.7	-
PHF	0.000	0.000	0.000	0.000	0.000	0.000	0.938	0.000	0.000	0.938	0.000	0.000	0.250	0.000	0.250	0.000	0.914	0.000	0.000	0.914	0.938
Lights	0	0	0	0	0	0	417	0	0	417	0	0	2	0	2	0	318	0	0	318	737
% Lights	-	-	-	-	-	-	91.9	-	-	91.9	-	-	100.0	-	100.0	-	82.8	-	-	82.8	87.7
Other Vehicles	0	0	0	0	0	0	37	0	0	37	0	0	0	0	0	0	66	0	0	66	103
% Other Vehicles	-	-	-	-	-	-	8.1	-	-	8.1	-	-	0.0	-	0.0	-	17.2	-	-	17.2	12.3

Stantec Consulting Ltd.
300 - 1919 Rose St

Regina, Saskatchewan, Canada S4P 3P1
306 781 6400 erin.harms@stantec.com

Count Name: T10 (Prairie View Rd & Louis Riel Trail)
Site Code:
Start Date: 06-06-2023
Page No: 8

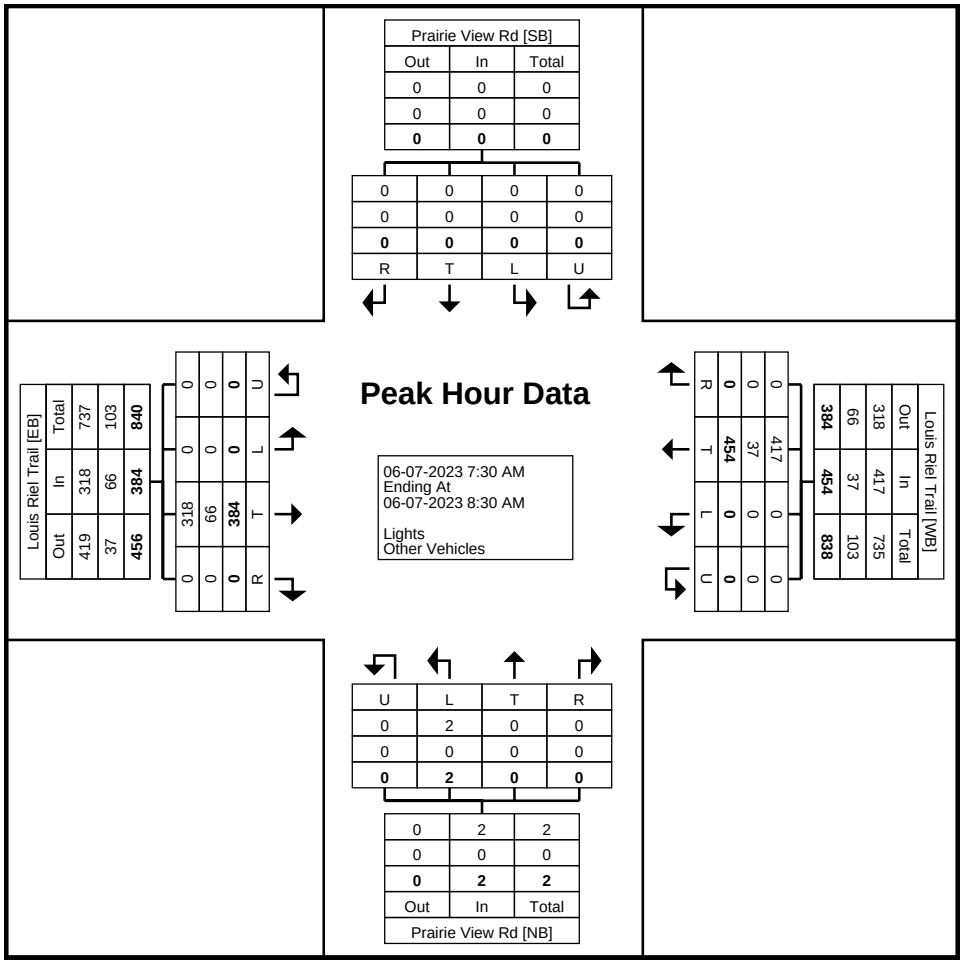

Turning Movement Peak Hour Data Plot (7:30 AM)

Stantec Consulting Ltd.
300 - 1919 Rose St

Regina, Saskatchewan, Canada S4P 3P1
306 781 6400 erin.harms@stantec.com

Count Name: T10 (Prairie View Rd & Louis Riel Trail)
Site Code:
Start Date: 06-06-2023

Turning Movement Peak Hour Data (3:00 PM)

Start Time	Prairie View Rd Southbound					Louis Riel Trail Westbound					Prairie View Rd Northbound					Louis Riel Trail Eastbound					
	Right	Thru	Left	U-Turn	App. Total	Right	Thru	Left	U-Turn	App. Total	Right	Thru	Left	U-Turn	App. Total	Right	Thru	Left	U-Turn	App. Total	Int. Total
3:00 PM	0	0	1	0	1	0	124	0	0	124	1	0	0	0	1	0	113	0	0	113	239
3:15 PM	0	0	1	0	1	0	96	0	0	96	0	0	1	0	1	0	127	0	0	127	225
3:30 PM	0	0	0	0	0	0	91	0	0	91	0	0	0	0	0	0	114	0	0	114	205
3:45 PM	0	0	0	0	0	0	106	0	0	106	0	0	2	0	2	0	155	0	0	155	263
Total	0	0	2	0	2	0	417	0	0	417	1	0	3	0	4	0	509	0	0	509	932
Approach %	0.0	0.0	100.0	0.0	-	0.0	100.0	0.0	0.0	-	25.0	0.0	75.0	0.0	-	0.0	100.0	0.0	0.0	-	-
Total %	0.0	0.0	0.2	0.0	0.2	0.0	44.7	0.0	0.0	44.7	0.1	0.0	0.3	0.0	0.4	0.0	54.6	0.0	0.0	54.6	-
PHF	0.000	0.000	0.500	0.000	0.500	0.000	0.841	0.000	0.000	0.841	0.250	0.000	0.375	0.000	0.500	0.000	0.821	0.000	0.000	0.821	0.886
Lights	0	0	2	0	2	0	344	0	0	344	1	0	3	0	4	0	440	0	0	440	790
% Lights	-	-	100.0	-	100.0	-	82.5	-	-	82.5	100.0	-	100.0	-	100.0	-	86.4	-	-	86.4	84.8
Other Vehicles	0	0	0	0	0	0	73	0	0	73	0	0	0	0	0	0	69	0	0	69	142
% Other Vehicles	-	-	0.0	-	0.0	-	17.5	-	-	17.5	0.0	-	0.0	-	0.0	-	13.6	-	-	13.6	15.2

Stantec Consulting Ltd.
300 - 1919 Rose St

Regina, Saskatchewan, Canada S4P 3P1
306 781 6400 erin.harms@stantec.com

Count Name: T10 (Prairie View Rd & Louis Riel Trail)
Site Code:
Start Date: 06-06-2023
Page No: 10

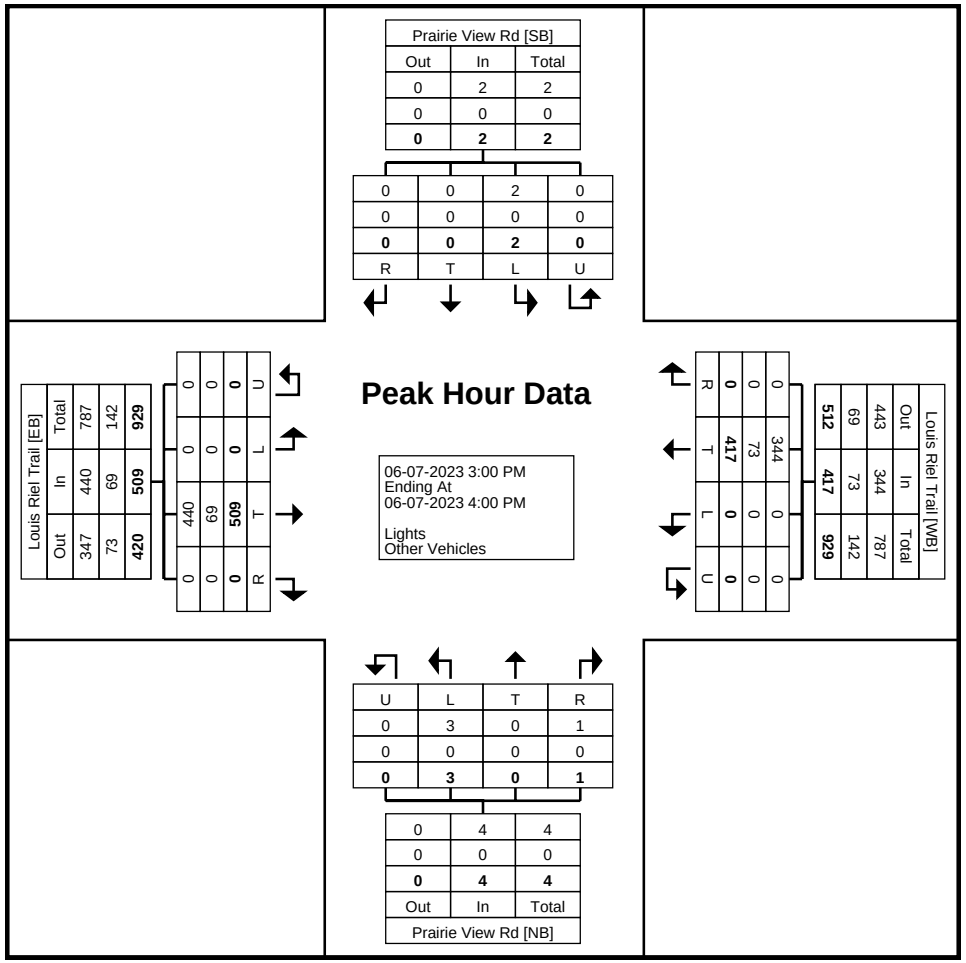

Turning Movement Peak Hour Data Plot (3:00 PM)

Stantec Consulting Ltd.
300 - 1919 Rose St

Regina, Saskatchewan, Canada S4P 3P1
306 781 6400 erin.harms@stantec.com

Count Name: Township Rd 350 & Prairie View Rd
Site Code:
Start Date: 05-24-2023

Turning Movement Data

Start Time	Prairie View Rd Southbound					Township Rd 350 Westbound					Prairie View Rd Northbound					Township Rd 350 Eastbound					
	Right	Thru	Left	U-Turn	App. Total	Right	Thru	Left	U-Turn	App. Total	Right	Thru	Left	U-Turn	App. Total	Right	Thru	Left	U-Turn	App. Total	Int. Total
5:15 PM	0	0	0	0	0	0	0	1	0	1	0	0	0	0	0	0	0	1	0	1	2
5:30 PM	0	0	1	0	1	0	0	0	0	0	0	0	0	0	0	0	0	1	0	1	2
5:45 PM	0	0	0	0	0	0	1	0	0	1	0	0	0	0	0	0	0	0	0	0	1
Hourly Total	0	0	1	0	1	0	1	1	0	2	0	0	0	0	0	0	0	2	0	2	5
6:00 PM	0	0	0	0	0	0	0	0	0	0	0	1	0	0	1	0	1	1	0	2	3
6:15 PM	0	0	0	0	0	0	0	1	0	1	0	0	0	0	0	0	0	0	0	0	1
6:30 PM	0	0	0	0	0	0	0	0	0	0	0	0	0	0	0	0	0	0	0	0	0
6:45 PM	0	0	0	0	0	0	0	0	0	0	0	0	0	0	0	0	0	0	0	0	0
Hourly Total	0	0	0	0	0	0	0	1	0	1	0	1	0	0	1	0	1	1	0	2	4
7:00 PM	0	0	0	0	0	0	0	0	0	0	0	0	0	0	0	0	0	0	0	0	0
7:15 PM	0	0	0	0	0	0	1	0	0	1	0	0	0	0	0	0	0	0	0	0	1
7:30 PM	0	0	0	0	0	0	1	0	0	1	0	0	0	0	0	0	0	0	0	0	1
7:45 PM	0	0	0	0	0	0	0	0	0	0	0	0	0	0	0	0	0	0	0	0	0
Hourly Total	0	0	0	0	0	0	2	0	0	2	0	0	0	0	0	0	0	0	0	0	2
8:00 PM	0	0	0	0	0	0	0	0	0	0	0	0	0	0	0	0	0	0	0	0	0
8:15 PM	0	0	0	0	0	0	0	0	0	0	0	0	0	0	0	0	0	0	0	0	0
8:30 PM	0	0	0	0	0	0	0	0	0	0	0	0	0	0	0	0	0	0	0	0	0
8:45 PM	0	0	0	0	0	0	0	0	0	0	0	0	0	0	0	0	0	0	0	0	0
Hourly Total	0	0	0	0	0	0	0	0	0	0	0	0	0	0	0	0	0	0	0	0	0
9:00 PM	0	0	0	0	0	0	0	0	0	0	0	0	0	0	0	0	0	0	0	0	0
9:15 PM	0	0	0	0	0	0	0	0	0	0	0	0	0	0	0	0	0	0	0	0	0
9:30 PM	0	0	0	0	0	0	2	0	0	2	0	0	0	0	0	0	0	0	0	0	2
9:45 PM	0	0	0	0	0	0	0	0	0	0	0	0	0	0	0	0	1	0	0	1	1
Hourly Total	0	0	0	0	0	0	2	0	0	2	0	0	0	0	0	0	1	0	0	1	3
10:00 PM	0	0	0	0	0	0	0	0	0	0	0	0	0	0	0	0	0	0	0	0	0
10:15 PM	0	0	0	0	0	0	0	0	0	0	0	0	0	0	0	0	0	0	0	0	0
10:30 PM	0	0	0	0	0	0	0	0	0	0	0	0	0	0	0	0	0	0	0	0	0
10:45 PM	0	0	0	0	0	0	0	0	0	0	0	0	0	0	0	0	0	0	0	0	0
Hourly Total	0	0	0	0	0	0	0	0	0	0	0	0	0	0	0	0	0	0	0	0	0
11:00 PM	0	0	0	0	0	0	0	0	0	0	0	0	0	0	0	0	0	0	0	0	0
11:15 PM	0	0	0	0	0	0	0	0	0	0	0	0	0	0	0	0	0	0	0	0	0
11:30 PM	0	0	0	0	0	0	0	0	0	0	0	0	0	0	0	0	0	0	0	0	0
11:45 PM	0	0	0	0	0	0	0	0	0	0	0	0	0	0	0	0	0	0	0	0	0
Hourly Total	0	0	0	0	0	0	0	0	0	0	0	0	0	0	0	0	0	0	0	0	0
12:00 AM	0	0	0	0	0	0	0	0	0	0	0	0	0	0	0	0	0	0	0	0	0
12:15 AM	0	0	0	0	0	0	0	0	0	0	0	0	0	0	0	0	0	0	0	0	0

12:30 AM	0	0	0	0	0	0	0	0	0	0	0	0	0	0	0	0	0	0	0	0	0
12:45 AM	0	0	0	0	0	0	0	0	0	0	0	0	0	0	0	0	0	0	0	0	0
Hourly Total	0	0	0	0	0	0	0	0	0	0	0	0	0	0	0	0	0	0	0	0	0
1:00 AM	0	0	0	0	0	0	0	0	0	0	0	0	0	0	0	0	0	0	0	0	0
1:15 AM	0	0	0	0	0	0	0	0	0	0	0	0	0	0	0	0	0	0	0	0	0
1:30 AM	0	0	0	0	0	0	0	0	0	0	0	0	0	0	0	0	0	0	0	0	0
1:45 AM	0	0	0	0	0	0	0	0	0	0	0	0	0	0	0	0	0	0	0	0	0
Hourly Total	0	0	0	0	0	0	0	0	0	0	0	0	0	0	0	0	0	0	0	0	0
2:00 AM	0	0	0	0	0	0	0	0	0	0	0	0	0	0	0	0	0	0	0	0	0
2:15 AM	0	0	0	0	0	0	0	0	0	0	0	0	0	0	0	0	0	0	0	0	0
2:30 AM	0	0	0	0	0	0	0	0	0	0	0	0	0	0	0	0	0	0	0	0	0
2:45 AM	0	0	0	0	0	0	0	0	0	0	0	0	0	0	0	0	0	0	0	0	0
Hourly Total	0	0	0	0	0	0	0	0	0	0	0	0	0	0	0	0	0	0	0	0	0
3:00 AM	0	0	0	0	0	0	0	0	0	0	0	0	0	0	0	0	0	0	0	0	0
3:15 AM	0	0	0	0	0	0	0	0	0	0	0	0	0	0	0	0	0	0	0	0	0
3:30 AM	0	0	0	0	0	0	0	0	0	0	1	0	0	0	1	0	0	0	0	0	1
3:45 AM	0	0	0	0	0	0	0	0	0	0	0	0	0	0	0	0	0	0	0	0	0
Hourly Total	0	0	0	0	0	0	0	0	0	0	1	0	0	0	1	0	0	0	0	0	1
4:00 AM	0	0	0	0	0	0	0	0	0	0	0	0	0	0	0	0	0	0	0	0	0
4:15 AM	0	0	0	0	0	0	0	0	0	0	0	0	0	0	0	0	0	0	0	0	0
4:30 AM	0	0	0	0	0	0	0	0	0	0	0	0	0	0	0	0	0	0	0	0	0
4:45 AM	0	0	0	0	0	0	1	0	0	1	0	0	0	0	0	0	0	0	0	0	1
Hourly Total	0	0	0	0	0	0	1	0	0	1	0	0	0	0	0	0	0	0	0	0	1
5:00 AM	0	0	0	0	0	0	0	0	0	0	0	0	0	0	0	0	0	0	0	0	0
5:15 AM	0	0	0	0	0	0	0	0	0	0	0	0	0	0	0	0	0	0	0	0	0
5:30 AM	0	0	0	0	0	0	0	0	0	0	0	0	0	0	0	0	0	0	0	0	0
5:45 AM	0	0	0	0	0	0	0	0	0	0	0	0	0	0	0	0	0	0	0	0	0
Hourly Total	0	0	0	0	0	0	0	0	0	0	0	0	0	0	0	0	0	0	0	0	0
6:00 AM	0	0	0	0	0	0	0	0	0	0	0	0	0	0	0	0	0	0	0	0	0
6:15 AM	0	0	0	0	0	0	0	0	0	0	0	0	0	0	0	0	1	0	0	1	1
6:30 AM	0	0	0	0	0	0	0	0	0	0	0	0	0	0	0	0	0	0	0	0	0
6:45 AM	0	0	0	0	0	1	0	0	0	1	0	0	0	0	0	0	1	0	0	1	2
Hourly Total	0	0	0	0	0	1	0	0	0	1	0	0	0	0	0	0	2	0	0	2	3
7:00 AM	0	0	0	0	0	0	0	0	0	0	0	0	0	0	0	0	0	0	0	0	0
7:15 AM	0	0	0	0	0	0	1	0	0	1	0	0	0	0	0	0	1	0	0	1	2
7:30 AM	0	0	0	0	0	0	0	0	0	0	1	0	0	0	1	0	1	0	0	1	2
7:45 AM	0	0	0	0	0	0	0	0	0	0	0	0	0	0	0	0	0	0	0	0	0
Hourly Total	0	0	0	0	0	0	1	0	0	1	1	0	0	0	1	0	2	0	0	2	4
8:00 AM	0	0	0	0	0	0	1	0	0	1	0	0	0	0	0	0	1	0	0	1	2
8:15 AM	0	0	0	0	0	0	1	0	0	1	0	0	0	0	0	0	0	0	0	0	1
8:30 AM	0	0	0	0	0	0	1	0	0	1	0	0	1	0	1	0	0	0	0	0	2
8:45 AM	0	0	0	0	0	0	2	0	0	2	0	0	0	0	0	0	2	0	0	2	4
Hourly Total	0	0	0	0	0	0	5	0	0	5	0	0	1	0	1	0	3	0	0	3	9
9:00 AM	0	0	0	0	0	0	0	0	0	0	0	0	0	0	0	0	1	0	0	1	1
9:15 AM	0	0	0	0	0	0	0	0	0	0	0	0	0	0	0	1	1	0	0	2	2
9:30 AM	0	0	0	0	0	1	0	0	0	1	0	0	0	0	0	0	0	0	0	0	1
9:45 AM	0	0	0	0	0	0	0	0	0	0	0	0	0	0	0	0	0	0	0	0	0
Hourly Total	0	0	0	0	0	1	0	0	0	1	0	0	0	0	0	1	2	0	0	3	4
10:00 AM	0	0	0	0	0	0	1	0	0	1	0	0	0	0	0	0	0	0	0	0	1
10:15 AM	0	0	0	0	0	0	0	0	0	0	0	0	0	0	0	0	0	0	0	0	0
10:30 AM	0	0	0	0	0	0	0	1	0	1	1	0	0	0	1	0	0	0	0	0	2
10:45 AM	0	0	0	0	0	1	1	0	0	2	0	0	0	0	0	0	1	0	0	1	3

Hourly Total	0	0	0	0	0	1	2	1	0	4	1	0	0	0	1	0	1	0	0	1	6
11:00 AM	0	0	0	0	0	0	0	0	0	0	0	0	0	0	0	0	0	0	0	0	0
11:15 AM	0	0	1	0	1	0	1	0	0	1	0	0	1	0	1	0	0	0	0	0	3
11:30 AM	0	0	0	0	0	0	0	0	0	0	0	0	0	0	0	0	0	0	0	0	0
11:45 AM	0	0	0	0	0	0	0	0	0	0	0	0	0	0	0	0	1	0	0	1	1
Hourly Total	0	0	1	0	1	0	1	0	0	1	0	0	1	0	1	0	1	0	0	1	4
12:00 PM	0	0	0	0	0	0	1	0	0	1	0	0	0	0	0	0	2	0	0	2	3
12:15 PM	0	0	0	0	0	1	0	0	0	1	0	0	0	0	0	0	1	0	0	1	2
12:30 PM	0	0	0	0	0	0	0	0	0	0	0	0	0	0	0	0	0	0	0	0	0
12:45 PM	0	0	1	0	1	0	1	0	0	1	0	0	0	0	0	0	0	0	0	0	2
Hourly Total	0	0	1	0	1	1	2	0	0	3	0	0	0	0	0	0	3	0	0	3	7
1:00 PM	0	0	0	0	0	0	0	0	0	0	0	0	0	0	0	0	1	0	0	1	1
1:15 PM	0	0	0	0	0	0	0	0	0	0	0	0	0	0	0	0	0	0	0	0	0
1:30 PM	0	0	0	0	0	0	1	0	0	1	0	0	0	0	0	0	1	0	0	1	2
1:45 PM	0	0	0	0	0	0	1	0	0	1	0	0	0	0	0	0	0	0	0	0	1
Hourly Total	0	0	0	0	0	0	2	0	0	2	0	0	0	0	0	0	2	0	0	2	4
2:00 PM	0	0	0	0	0	0	0	0	0	0	0	0	0	0	0	0	0	0	0	0	0
2:15 PM	0	0	0	0	0	0	0	0	0	0	0	0	0	0	0	0	0	0	0	0	0
2:30 PM	0	0	0	0	0	0	0	0	0	0	0	0	0	0	0	1	0	0	0	1	1
2:45 PM	0	0	0	0	0	0	1	0	0	1	0	0	0	0	0	1	0	0	0	1	2
Hourly Total	0	0	0	0	0	0	1	0	0	1	0	0	0	0	0	2	0	0	0	2	3
3:00 PM	0	0	0	0	0	0	2	0	0	2	0	0	0	0	0	0	0	0	0	0	2
3:15 PM	0	0	0	0	0	1	0	0	0	1	0	0	0	0	0	0	0	0	0	0	1
3:30 PM	0	1	0	0	1	0	1	0	0	1	0	0	1	0	1	1	1	0	0	2	5
3:45 PM	0	0	0	0	0	0	0	0	0	0	0	0	0	0	0	0	0	0	0	0	0
Hourly Total	0	1	0	0	1	1	3	0	0	4	0	0	1	0	1	1	1	0	0	2	8
4:00 PM	0	0	1	0	1	0	1	0	0	1	0	0	1	0	1	0	0	0	0	0	3
4:15 PM	0	0	1	0	1	0	0	1	0	1	0	0	0	0	0	1	1	0	0	2	4
4:30 PM	0	0	0	1	1	0	1	0	0	1	0	0	0	0	0	0	0	0	0	0	2
4:45 PM	0	0	1	0	1	0	0	0	0	0	0	0	0	0	0	0	0	0	0	0	1
Hourly Total	0	0	3	1	4	0	2	1	0	3	0	0	1	0	1	1	1	0	0	2	10
5:00 PM	0	0	0	0	0	0	0	1	0	1	0	0	1	0	1	0	2	0	0	2	4
Grand Total	0	1	6	1	8	5	25	5	0	35	3	1	5	0	9	5	22	3	0	30	82
Approach %	0.0	12.5	75.0	12.5	-	14.3	71.4	14.3	0.0	-	33.3	11.1	55.6	0.0	-	16.7	73.3	10.0	0.0	-	-
Total %	0.0	1.2	7.3	1.2	9.8	6.1	30.5	6.1	0.0	42.7	3.7	1.2	6.1	0.0	11.0	6.1	26.8	3.7	0.0	36.6	-
Lights	0	1	4	1	6	5	22	5	0	32	3	1	4	0	8	4	20	3	0	27	73
% Lights	-	100.0	66.7	100.0	75.0	100.0	88.0	100.0	-	91.4	100.0	100.0	80.0	-	88.9	80.0	90.9	100.0	-	90.0	89.0
Other Vehicles	0	0	2	0	2	0	3	0	0	3	0	0	1	0	1	1	2	0	0	3	9
% Other Vehicles	-	0.0	33.3	0.0	25.0	0.0	12.0	0.0	-	8.6	0.0	0.0	20.0	-	11.1	20.0	9.1	0.0	-	10.0	11.0

Stantec Consulting Ltd.
300 - 1919 Rose St

Regina, Saskatchewan, Canada S4P 3P1
306 781 6400 erin.harms@stantec.com

Count Name: Township Rd 350 & Prairie View Rd
Site Code:
Start Date: 05-24-2023

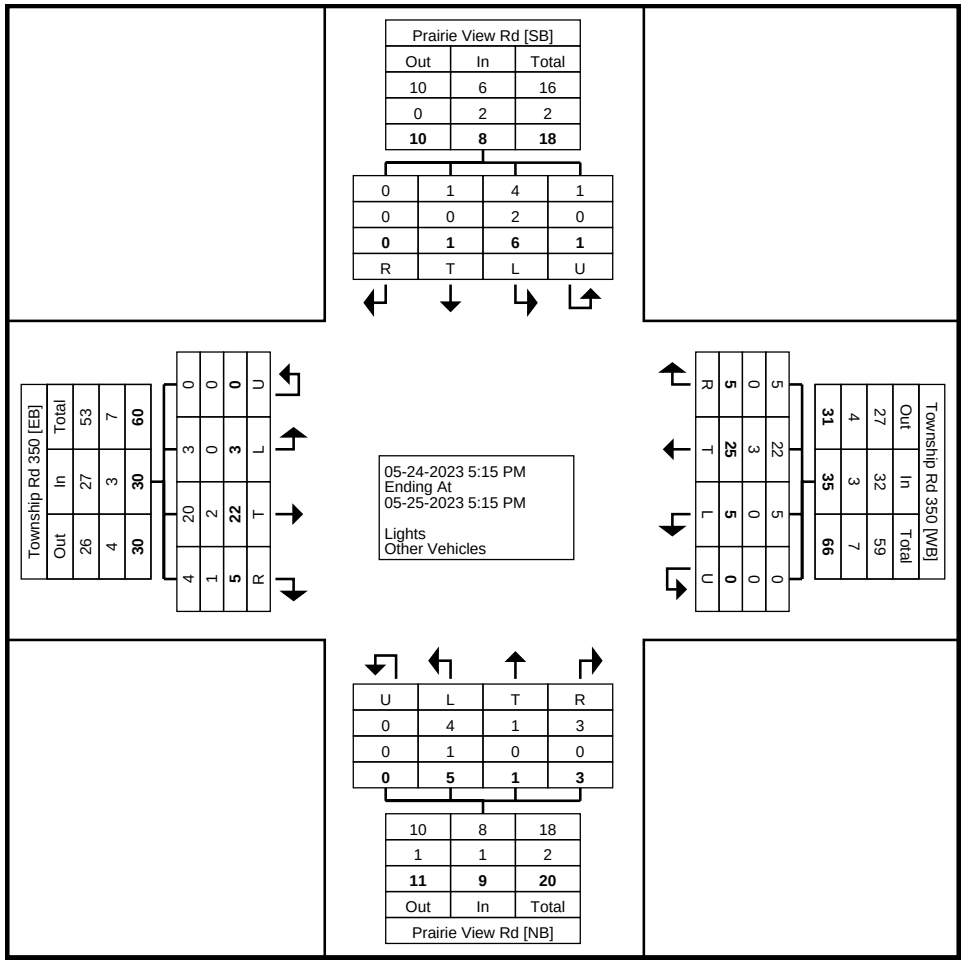

Turning Movement Data Plot

Stantec Consulting Ltd.
300 - 1919 Rose St

Regina, Saskatchewan, Canada S4P 3P1
306 781 6400 erin.harms@stantec.com

Count Name: Township Rd 350 & Prairie View Rd
Site Code:
Start Date: 05-24-2023

Turning Movement Peak Hour Data (5:15 PM)

Start Time	Prairie View Rd Southbound					Township Rd 350 Westbound					Prairie View Rd Northbound					Township Rd 350 Eastbound					
	Right	Thru	Left	U-Turn	App. Total	Right	Thru	Left	U-Turn	App. Total	Right	Thru	Left	U-Turn	App. Total	Right	Thru	Left	U-Turn	App. Total	Int. Total
5:15 PM	0	0	0	0	0	0	0	1	0	1	0	0	0	0	0	0	0	1	0	1	2
5:30 PM	0	0	1	0	1	0	0	0	0	0	0	0	0	0	0	0	0	1	0	1	2
5:45 PM	0	0	0	0	0	0	1	0	0	1	0	0	0	0	0	0	0	0	0	0	1
6:00 PM	0	0	0	0	0	0	0	0	0	0	0	1	0	0	1	0	1	1	0	2	3
Total	0	0	1	0	1	0	1	1	0	2	0	1	0	0	1	0	1	3	0	4	8
Approach %	0.0	0.0	100.0	0.0	-	0.0	50.0	50.0	0.0	-	0.0	100.0	0.0	0.0	-	0.0	25.0	75.0	0.0	-	-
Total %	0.0	0.0	12.5	0.0	12.5	0.0	12.5	12.5	0.0	25.0	0.0	12.5	0.0	0.0	12.5	0.0	12.5	37.5	0.0	50.0	-
PHF	0.000	0.000	0.250	0.000	0.250	0.000	0.250	0.250	0.000	0.500	0.000	0.250	0.000	0.000	0.250	0.000	0.250	0.750	0.000	0.500	0.667
Lights	0	0	1	0	1	0	1	1	0	2	0	1	0	0	1	0	1	3	0	4	8
% Lights	-	-	100.0	-	100.0	-	100.0	100.0	-	100.0	-	100.0	-	-	100.0	-	100.0	100.0	-	100.0	100.0
Other Vehicles	0	0	0	0	0	0	0	0	0	0	0	0	0	0	0	0	0	0	0	0	0
% Other Vehicles	-	-	0.0	-	0.0	-	0.0	0.0	-	0.0	-	0.0	-	-	0.0	-	0.0	0.0	-	0.0	0.0

Stantec Consulting Ltd.
300 - 1919 Rose St

Regina, Saskatchewan, Canada S4P 3P1
306 781 6400 erin.harms@stantec.com

Count Name: Township Rd 350 & Prairie View Rd
Site Code:
Start Date: 05-24-2023

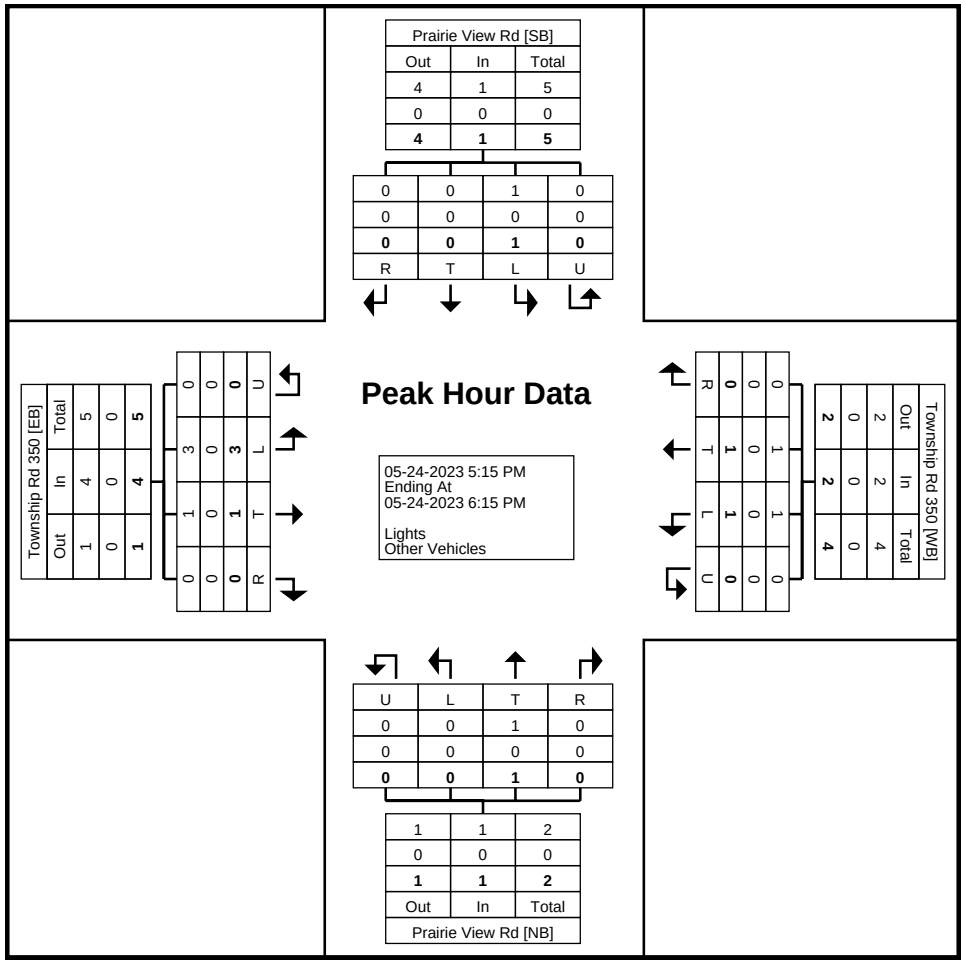

Turning Movement Peak Hour Data Plot (5:15 PM)

Stantec Consulting Ltd.
300 - 1919 Rose St

Regina, Saskatchewan, Canada S4P 3P1
306 781 6400 erin.harms@stantec.com

Count Name: Township Rd 350 & Prairie View Rd
Site Code:
Start Date: 05-24-2023

Turning Movement Peak Hour Data (8:00 AM)

Start Time	Prairie View Rd Southbound					Township Rd 350 Westbound					Prairie View Rd Northbound					Township Rd 350 Eastbound					
	Right	Thru	Left	U-Turn	App. Total	Right	Thru	Left	U-Turn	App. Total	Right	Thru	Left	U-Turn	App. Total	Right	Thru	Left	U-Turn	App. Total	Int. Total
8:00 AM	0	0	0	0	0	0	1	0	0	1	0	0	0	0	0	0	1	0	0	1	2
8:15 AM	0	0	0	0	0	0	1	0	0	1	0	0	0	0	0	0	0	0	0	0	1
8:30 AM	0	0	0	0	0	0	1	0	0	1	0	0	1	0	1	0	0	0	0	0	2
8:45 AM	0	0	0	0	0	0	2	0	0	2	0	0	0	0	0	0	2	0	0	2	4
Total	0	0	0	0	0	0	5	0	0	5	0	0	1	0	1	0	3	0	0	3	9
Approach %	0.0	0.0	0.0	0.0	-	0.0	100.0	0.0	0.0	-	0.0	0.0	100.0	0.0	-	0.0	100.0	0.0	0.0	-	-
Total %	0.0	0.0	0.0	0.0	0.0	0.0	55.6	0.0	0.0	55.6	0.0	0.0	11.1	0.0	11.1	0.0	33.3	0.0	0.0	33.3	-
PHF	0.000	0.000	0.000	0.000	0.000	0.000	0.625	0.000	0.000	0.625	0.000	0.000	0.250	0.000	0.250	0.000	0.375	0.000	0.000	0.375	0.563
Lights	0	0	0	0	0	0	4	0	0	4	0	0	0	0	0	0	2	0	0	2	6
% Lights	-	-	-	-	-	-	80.0	-	-	80.0	-	-	0.0	-	0.0	-	66.7	-	-	66.7	66.7
Other Vehicles	0	0	0	0	0	0	1	0	0	1	0	0	1	0	1	0	1	0	0	1	3
% Other Vehicles	-	-	-	-	-	-	20.0	-	-	20.0	-	-	100.0	-	100.0	-	33.3	-	-	33.3	33.3

Stantec Consulting Ltd.
300 - 1919 Rose St

Regina, Saskatchewan, Canada S4P 3P1
306 781 6400 erin.harms@stantec.com

Count Name: Township Rd 350 & Prairie View Rd
Site Code:
Start Date: 05-24-2023

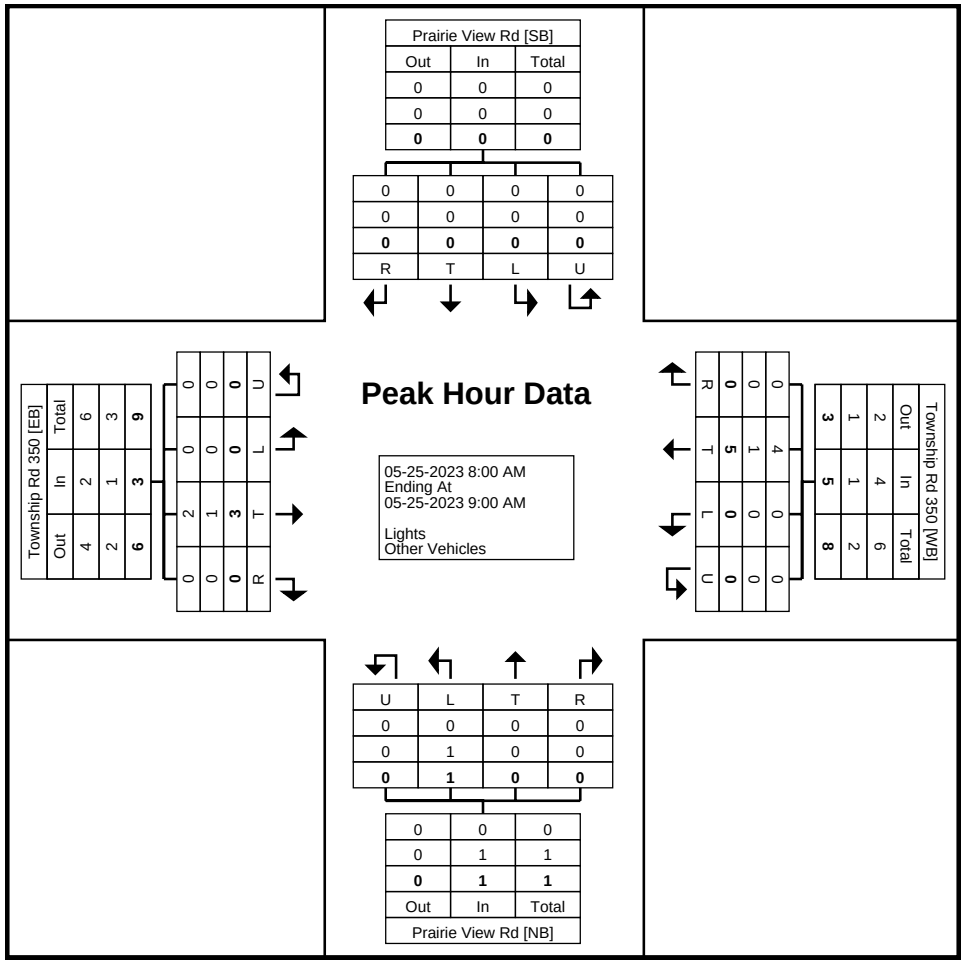

Turning Movement Peak Hour Data Plot (8:00 AM)

Stantec Consulting Ltd.
300 - 1919 Rose St

Regina, Saskatchewan, Canada S4P 3P1
306 781 6400 erin.harms@stantec.com

Count Name: Township Rd 350 & Prairie View Rd
Site Code:
Start Date: 05-24-2023

Turning Movement Peak Hour Data (3:30 PM)

Start Time	Prairie View Rd Southbound					Township Rd 350 Westbound					Prairie View Rd Northbound					Township Rd 350 Eastbound					
	Right	Thru	Left	U-Turn	App. Total	Right	Thru	Left	U-Turn	App. Total	Right	Thru	Left	U-Turn	App. Total	Right	Thru	Left	U-Turn	App. Total	Int. Total
3:30 PM	0	1	0	0	1	0	1	0	0	1	0	0	1	0	1	1	1	0	0	2	5
3:45 PM	0	0	0	0	0	0	0	0	0	0	0	0	0	0	0	0	0	0	0	0	0
4:00 PM	0	0	1	0	1	0	1	0	0	1	0	0	1	0	1	0	0	0	0	0	3
4:15 PM	0	0	1	0	1	0	0	1	0	1	0	0	0	0	0	1	1	0	0	2	4
Total	0	1	2	0	3	0	2	1	0	3	0	0	2	0	2	2	2	0	0	4	12
Approach %	0.0	33.3	66.7	0.0	-	0.0	66.7	33.3	0.0	-	0.0	0.0	100.0	0.0	-	50.0	50.0	0.0	0.0	-	-
Total %	0.0	8.3	16.7	0.0	25.0	0.0	16.7	8.3	0.0	25.0	0.0	0.0	16.7	0.0	16.7	16.7	16.7	0.0	0.0	33.3	-
PHF	0.000	0.250	0.500	0.000	0.750	0.000	0.500	0.250	0.000	0.750	0.000	0.000	0.500	0.000	0.500	0.500	0.500	0.000	0.000	0.500	0.600
Lights	0	1	1	0	2	0	1	1	0	2	0	0	2	0	2	1	1	0	0	2	8
% Lights	-	100.0	50.0	-	66.7	-	50.0	100.0	-	66.7	-	-	100.0	-	100.0	50.0	50.0	-	-	50.0	66.7
Other Vehicles	0	0	1	0	1	0	1	0	0	1	0	0	0	0	0	1	1	0	0	2	4
% Other Vehicles	-	0.0	50.0	-	33.3	-	50.0	0.0	-	33.3	-	-	0.0	-	0.0	50.0	50.0	-	-	50.0	33.3

Stantec Consulting Ltd.
300 - 1919 Rose St

Regina, Saskatchewan, Canada S4P 3P1
306 781 6400 erin.harms@stantec.com

Count Name: Township Rd 350 & Prairie View Rd
Site Code:
Start Date: 05-24-2023

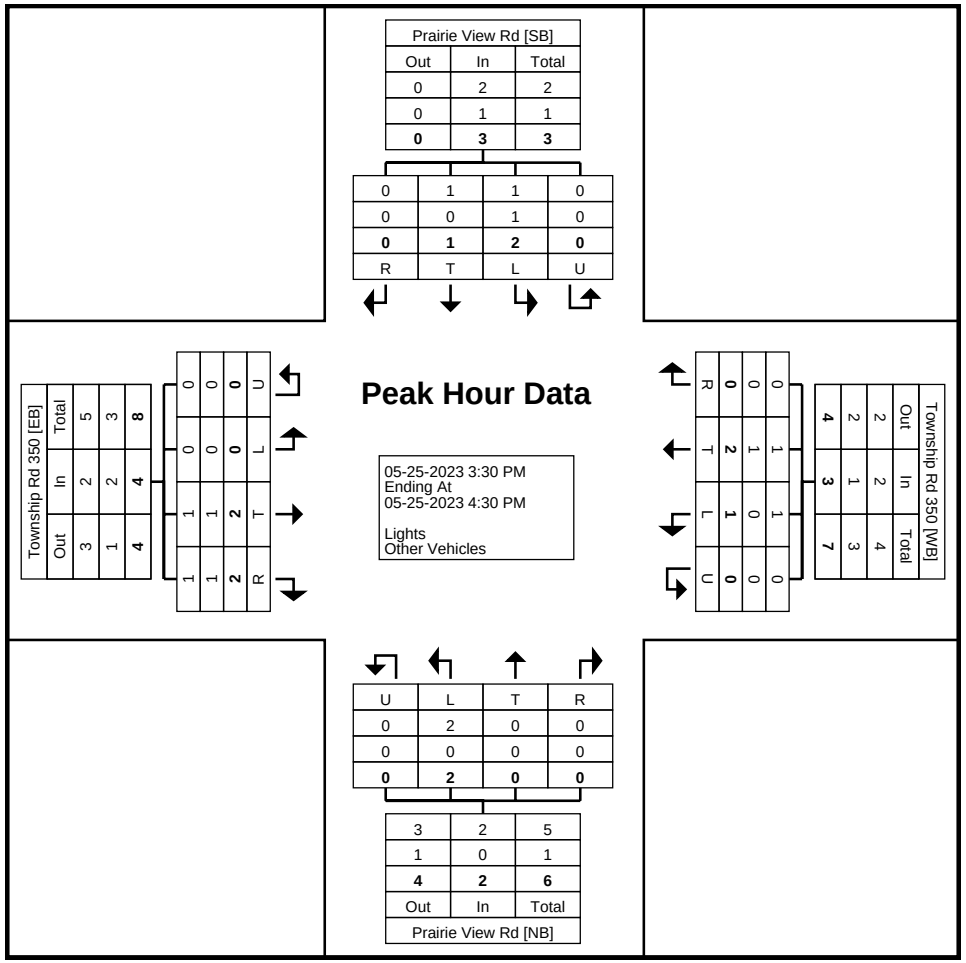

Turning Movement Peak Hour Data Plot (3:30 PM)

Stantec Consulting Ltd.
300 - 1919 Rose St

Regina, Saskatchewan, Canada S4P 3P1
306 781 6400 erin.harms@stantec.com

Count Name: T12(Township Rd 352 & Range Road 3052)
Site Code:
Start Date: 05-23-2023

Turning Movement Data

Start Time	Range Road 3052 Southbound					Township Rd 352 Westbound					Range Road 3052 Northbound					Township Rd 352 Eastbound					
	Right	Thru	Left	U-Turn	App. Total	Right	Thru	Left	U-Turn	App. Total	Right	Thru	Left	U-Turn	App. Total	Right	Thru	Left	U-Turn	App. Total	Int. Total
11:15 AM	0	0	0	0	0	0	0	0	0	0	0	0	1	0	1	0	0	0	0	0	1
11:30 AM	0	1	0	0	1	0	1	0	0	1	0	2	0	0	2	1	0	0	0	1	5
11:45 AM	0	1	0	0	1	0	1	0	0	1	0	2	0	0	2	0	1	0	0	1	5
Hourly Total	0	2	0	0	2	0	2	0	0	2	0	4	1	0	5	1	1	0	0	2	11
12:00 PM	0	0	0	0	0	1	0	0	0	1	0	0	0	0	0	0	1	0	0	1	2
12:15 PM	0	0	0	0	0	0	3	0	0	3	0	1	0	0	1	0	0	0	0	0	4
12:30 PM	2	0	0	0	2	1	1	0	0	2	0	0	0	0	0	1	0	1	0	2	6
12:45 PM	0	0	0	0	0	0	0	1	0	1	0	0	0	0	0	0	1	0	0	1	2
Hourly Total	2	0	0	0	2	2	4	1	0	7	0	1	0	0	1	1	2	1	0	4	14
1:00 PM	0	0	1	0	1	0	1	0	0	1	0	0	0	0	0	0	2	0	0	2	4
1:15 PM	1	0	1	0	2	1	2	0	0	3	2	0	0	0	2	2	1	0	0	3	10
1:30 PM	0	1	0	0	1	0	2	0	0	2	0	0	0	0	0	0	1	0	0	1	4
1:45 PM	0	0	0	0	0	0	1	0	0	1	0	0	0	0	0	0	0	0	0	0	1
Hourly Total	1	1	2	0	4	1	6	0	0	7	2	0	0	0	2	2	4	0	0	6	19
2:00 PM	0	0	0	0	0	0	1	0	0	1	0	1	0	0	1	0	2	0	0	2	4
2:15 PM	0	0	0	0	0	0	1	1	0	2	0	0	0	0	0	2	1	0	0	3	5
2:30 PM	0	0	0	0	0	0	0	0	0	0	0	0	0	0	0	0	0	0	0	0	0
2:45 PM	0	1	1	0	2	0	0	0	0	0	0	0	0	0	0	0	3	1	0	4	6
Hourly Total	0	1	1	0	2	0	2	1	0	3	0	1	0	0	1	2	6	1	0	9	15
3:00 PM	0	0	0	0	0	0	1	0	0	1	0	0	0	0	0	0	2	0	0	2	3
3:15 PM	0	2	0	0	2	1	0	0	0	1	0	0	0	0	0	0	2	0	0	2	5
3:30 PM	1	0	0	0	1	1	0	1	0	2	0	1	1	0	2	0	0	1	0	1	6
3:45 PM	0	0	2	0	2	0	4	0	0	4	0	0	0	0	0	0	4	1	0	5	11
Hourly Total	1	2	2	0	5	2	5	1	0	8	0	1	1	0	2	0	8	2	0	10	25
4:00 PM	0	0	0	0	0	2	2	0	0	4	0	0	0	0	0	0	3	0	0	3	7
4:15 PM	0	0	0	0	0	1	0	0	0	1	0	1	1	0	2	0	1	0	0	1	4
4:30 PM	0	2	0	0	2	0	1	1	0	2	0	1	0	0	1	1	2	0	0	3	8
4:45 PM	1	1	0	0	2	0	1	0	0	1	0	0	0	0	0	1	4	0	0	5	8
Hourly Total	1	3	0	0	4	3	4	1	0	8	0	2	1	0	3	2	10	0	0	12	27
5:00 PM	0	0	0	0	0	1	0	0	0	1	0	2	0	0	2	0	1	0	0	1	4
5:15 PM	0	1	0	0	1	0	3	1	0	4	0	0	0	0	0	0	4	0	0	4	9
5:30 PM	0	1	0	0	1	0	1	2	0	3	0	0	0	0	0	0	2	0	0	2	6
5:45 PM	0	0	0	0	0	1	2	0	0	3	0	0	1	0	1	0	5	0	0	5	9
Hourly Total	0	2	0	0	2	2	6	3	0	11	0	2	1	0	3	0	12	0	0	12	28
6:00 PM	0	0	0	0	0	0	5	0	0	5	0	1	0	0	1	0	1	0	0	1	7
6:15 PM	1	0	0	0	1	0	1	0	0	1	1	1	2	0	4	0	1	0	0	1	7

6:30 PM	0	0	0	0	0	0	1	0	0	1	0	0	0	0	0	1	1	0	0	2	3
6:45 PM	0	2	0	0	2	0	0	0	0	0	0	2	0	0	2	0	0	0	0	0	4
Hourly Total	1	2	0	0	3	0	7	0	0	7	1	4	2	0	7	1	3	0	0	4	21
7:00 PM	0	1	0	0	1	1	1	0	0	2	0	1	0	0	1	0	1	0	0	1	5
7:15 PM	0	0	0	0	0	0	2	0	0	2	0	0	0	0	0	0	1	0	0	1	3
7:30 PM	0	0	0	0	0	1	0	0	0	1	0	0	0	0	0	2	1	0	0	3	4
7:45 PM	0	2	0	0	2	1	1	0	0	2	0	0	0	0	0	0	1	1	0	2	6
Hourly Total	0	3	0	0	3	3	4	0	0	7	0	1	0	0	1	2	4	1	0	7	18
8:00 PM	0	1	0	0	1	0	0	0	0	0	0	0	0	0	0	2	2	0	0	4	5
8:15 PM	0	0	0	0	0	0	0	0	0	0	0	0	0	0	0	2	0	0	0	2	2
8:30 PM	1	0	0	0	1	0	0	0	0	0	0	1	0	0	1	0	0	0	0	0	2
8:45 PM	0	0	0	0	0	0	0	0	0	0	0	0	0	0	0	0	1	0	0	1	1
Hourly Total	1	1	0	0	2	0	0	0	0	0	0	1	0	0	1	4	3	0	0	7	10
9:00 PM	0	1	0	0	1	0	0	0	0	0	0	0	0	0	0	0	0	0	0	0	1
9:15 PM	0	0	0	0	0	1	1	0	0	2	0	1	0	0	1	0	1	0	0	1	4
9:30 PM	0	1	0	0	1	0	0	0	0	0	0	1	0	0	1	0	0	0	0	0	2
9:45 PM	0	0	0	0	0	0	2	0	0	2	0	1	0	0	1	0	0	0	0	0	3
Hourly Total	0	2	0	0	2	1	3	0	0	4	0	3	0	0	3	0	1	0	0	1	10
10:00 PM	0	1	0	0	1	0	0	0	0	0	0	0	0	0	0	0	0	0	0	0	1
10:15 PM	0	0	0	0	0	0	0	0	0	0	0	0	0	0	0	0	0	0	0	0	0
10:30 PM	0	0	0	0	0	0	0	0	0	0	0	0	0	0	0	0	0	0	0	0	0
10:45 PM	0	0	0	0	0	0	0	0	0	0	0	0	0	0	0	0	0	0	0	0	0
Hourly Total	0	1	0	0	1	0	0	0	0	0	0	0	0	0	0	0	0	0	0	0	1
11:00 PM	0	0	0	0	0	0	0	0	0	0	0	0	0	0	0	0	0	0	0	0	0
11:15 PM	0	0	0	0	0	0	0	0	0	0	0	0	0	0	0	0	0	0	0	0	0
11:30 PM	0	0	0	0	0	0	0	0	0	0	0	0	0	0	0	0	3	0	0	3	3
11:45 PM	0	0	0	0	0	0	0	0	0	0	0	0	0	0	0	0	0	0	0	0	0
Hourly Total	0	0	0	0	0	0	0	0	0	0	0	0	0	0	0	0	3	0	0	3	3
12:00 AM	0	0	0	0	0	0	0	0	0	0	0	0	0	0	0	0	0	0	0	0	0
12:15 AM	0	0	0	0	0	0	0	0	0	0	0	0	0	0	0	0	0	0	0	0	0
12:30 AM	0	0	0	0	0	0	0	0	0	0	0	0	0	0	0	0	0	0	0	0	0
12:45 AM	0	0	0	0	0	0	0	0	0	0	0	0	0	0	0	0	0	0	0	0	0
Hourly Total	0	0	0	0	0	0	0	0	0	0	0	0	0	0	0	0	0	0	0	0	0
1:00 AM	0	0	0	0	0	0	0	0	0	0	0	0	0	0	0	0	0	0	0	0	0
1:15 AM	0	0	0	0	0	0	0	0	0	0	0	0	0	0	0	0	0	0	0	0	0
1:30 AM	0	0	0	0	0	0	0	0	0	0	0	0	0	0	0	0	0	0	0	0	0
1:45 AM	0	0	0	0	0	0	2	0	0	2	0	0	0	0	0	0	0	0	0	0	2
Hourly Total	0	0	0	0	0	0	2	0	0	2	0	0	0	0	0	0	0	0	0	0	2
2:00 AM	0	0	0	0	0	0	0	0	0	0	0	0	0	0	0	0	0	0	0	0	0
2:15 AM	0	0	0	0	0	0	0	0	0	0	0	0	0	0	0	0	0	0	0	0	0
2:30 AM	0	0	0	0	0	0	0	0	0	0	0	0	0	0	0	0	0	0	0	0	0
2:45 AM	0	0	0	0	0	0	0	0	0	0	0	0	0	0	0	0	0	0	0	0	0
Hourly Total	0	0	0	0	0	0	0	0	0	0	0	0	0	0	0	0	0	0	0	0	0
3:00 AM	0	0	0	0	0	0	0	0	0	0	0	0	0	0	0	0	0	0	0	0	0
3:15 AM	0	0	0	0	0	0	0	0	0	0	0	0	0	0	0	0	0	0	0	0	0
3:30 AM	0	0	0	0	0	0	0	0	0	0	0	0	0	0	0	0	0	0	0	0	0
3:45 AM	0	0	0	0	0	0	0	0	0	0	0	0	0	0	0	0	0	0	0	0	0
Hourly Total	0	0	0	0	0	0	0	0	0	0	0	0	0	0	0	0	0	0	0	0	0
4:00 AM	0	0	0	0	0	0	0	0	0	0	0	0	0	0	0	0	0	0	0	0	0
4:15 AM	0	0	0	0	0	0	0	0	0	0	0	0	0	0	0	0	0	0	0	0	0
4:30 AM	0	0	0	0	0	0	1	0	0	1	0	0	0	0	0	0	0	0	0	0	1
4:45 AM	0	0	0	0	0	0	0	0	0	0	0	0	0	0	0	0	0	0	0	0	0

Hourly Total	0	0	0	0	0	0	1	0	0	1	0	0	0	0	0	0	0	0	0	0	1
5:00 AM	0	0	0	0	0	0	0	0	0	0	0	0	0	0	0	0	0	0	0	0	0
5:15 AM	0	0	0	0	0	0	0	0	0	0	0	0	0	0	0	0	0	0	0	0	0
5:30 AM	0	0	0	0	0	0	0	0	0	0	0	0	0	0	0	0	0	0	0	0	0
5:45 AM	0	0	0	0	0	0	0	0	0	0	0	0	0	0	0	0	0	0	0	0	0
Hourly Total	0	0	0	0	0	0	0	0	0	0	0	0	0	0	0	0	0	0	0	0	0
6:00 AM	0	0	0	0	0	0	1	0	0	1	0	0	0	0	0	0	1	0	0	1	2
6:15 AM	0	0	0	0	0	0	0	0	0	0	0	0	0	0	0	0	0	0	0	0	0
6:30 AM	0	0	0	0	0	0	0	0	0	0	0	0	0	0	0	0	0	0	0	0	0
6:45 AM	0	0	0	0	0	0	1	0	0	1	0	2	0	0	2	0	0	0	0	0	3
Hourly Total	0	0	0	0	0	0	2	0	0	2	0	2	0	0	2	0	1	0	0	1	5
7:00 AM	0	0	0	0	0	0	1	0	0	1	0	0	0	0	0	0	1	0	0	1	2
7:15 AM	0	0	0	0	0	0	0	0	0	0	0	1	1	0	2	0	1	0	0	1	3
7:30 AM	0	0	0	0	0	0	1	0	1	2	1	0	2	0	3	0	1	0	0	1	6
7:45 AM	1	0	0	0	1	0	6	0	0	6	0	0	0	0	0	0	1	1	0	2	9
Hourly Total	1	0	0	0	1	0	8	0	1	9	1	1	3	0	5	0	4	1	0	5	20
8:00 AM	0	0	0	0	0	0	2	0	0	2	1	1	0	0	2	1	0	0	0	1	5
8:15 AM	0	0	0	0	0	0	0	0	0	0	0	0	0	0	0	0	1	0	0	1	1
8:30 AM	0	0	0	0	0	0	2	0	0	2	0	2	0	0	2	0	1	0	0	1	5
8:45 AM	1	1	0	0	2	1	3	0	0	4	0	0	0	0	0	1	0	0	0	1	7
Hourly Total	1	1	0	0	2	1	7	0	0	8	1	3	0	0	4	2	2	0	0	4	18
9:00 AM	0	0	0	0	0	0	0	0	0	0	0	1	0	0	1	0	0	0	0	0	1
9:15 AM	0	0	0	0	0	0	2	0	0	2	0	1	1	0	2	0	0	0	0	0	4
9:30 AM	0	0	0	0	0	0	0	0	0	0	0	0	0	0	0	0	0	0	0	0	0
9:45 AM	0	0	0	0	0	0	0	0	0	0	1	1	0	0	2	0	0	0	0	0	2
Hourly Total	0	0	0	0	0	0	2	0	0	2	1	3	1	0	5	0	0	0	0	0	7
10:00 AM	0	0	0	0	0	0	2	0	0	2	0	0	0	0	0	1	0	0	0	1	3
10:15 AM	0	0	0	0	0	0	0	0	0	0	0	1	0	0	1	0	1	0	0	1	2
10:30 AM	0	2	0	0	2	0	0	0	0	0	0	0	0	0	0	0	2	0	0	2	4
10:45 AM	0	0	0	0	0	0	0	1	0	1	0	0	0	0	0	1	0	0	0	1	2
Hourly Total	0	2	0	0	2	0	2	1	0	3	0	1	0	0	1	2	3	0	0	5	11
11:00 AM	0	0	0	0	0	0	2	0	0	2	0	0	0	0	0	0	0	0	0	0	2
Grand Total	9	23	5	0	37	15	69	8	1	93	6	30	10	0	46	19	67	6	0	92	268
Approach %	24.3	62.2	13.5	0.0	-	16.1	74.2	8.6	1.1	-	13.0	65.2	21.7	0.0	-	20.7	72.8	6.5	0.0	-	-
Total %	3.4	8.6	1.9	0.0	13.8	5.6	25.7	3.0	0.4	34.7	2.2	11.2	3.7	0.0	17.2	7.1	25.0	2.2	0.0	34.3	-
Lights	5	22	3	0	30	12	58	8	1	79	5	27	9	0	41	17	59	3	0	79	229
% Lights	55.6	95.7	60.0	-	81.1	80.0	84.1	100.0	100.0	84.9	83.3	90.0	90.0	-	89.1	89.5	88.1	50.0	-	85.9	85.4
Other Vehicles	4	1	2	0	7	3	11	0	0	14	1	3	1	0	5	2	8	3	0	13	39
% Other Vehicles	44.4	4.3	40.0	-	18.9	20.0	15.9	0.0	0.0	15.1	16.7	10.0	10.0	-	10.9	10.5	11.9	50.0	-	14.1	14.6

Stantec Consulting Ltd.
300 - 1919 Rose St

Regina, Saskatchewan, Canada S4P 3P1
306 781 6400 erin.harms@stantec.com

Count Name: T12(Township Rd 352 & Range Road 3052)
Site Code:
Start Date: 05-23-2023
Page No: 4

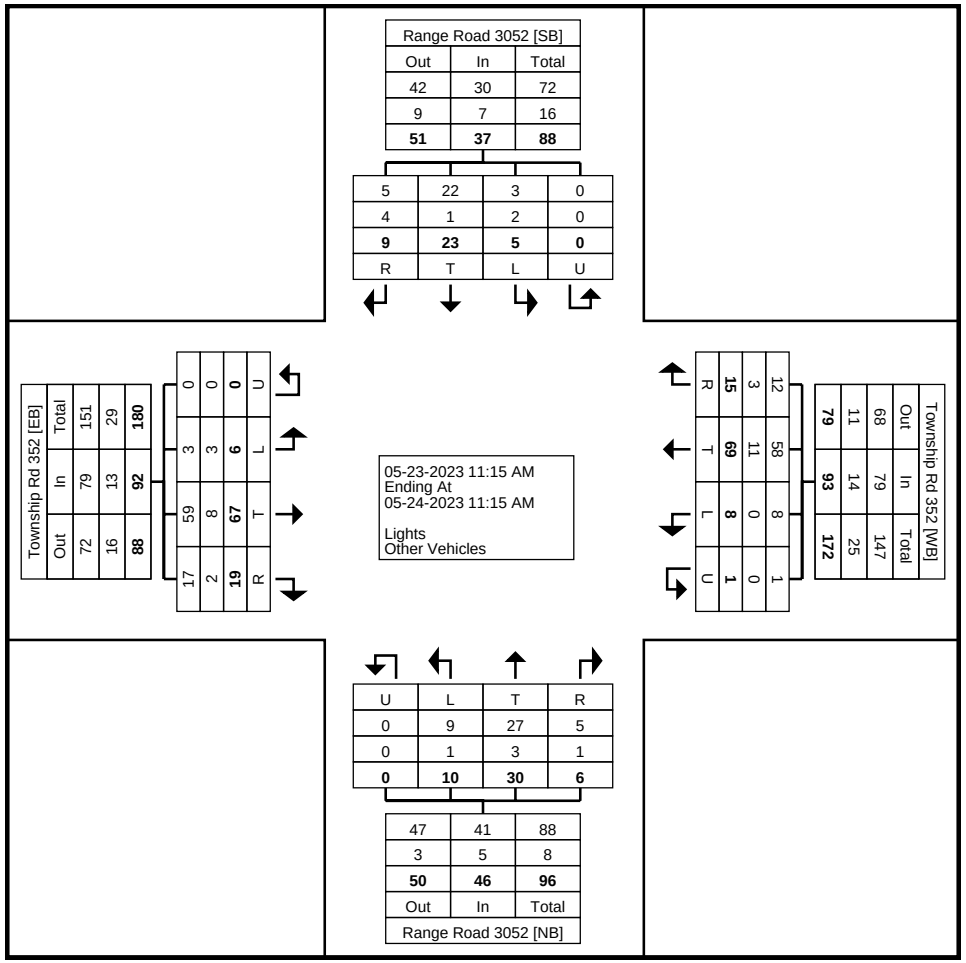

Turning Movement Data Plot

Stantec Consulting Ltd.
300 - 1919 Rose St

Regina, Saskatchewan, Canada S4P 3P1
306 781 6400 erin.harms@stantec.com

Count Name: T12(Township Rd 352 & Range Road 3052)
Site Code:
Start Date: 05-23-2023

Turning Movement Peak Hour Data (5:15 PM)

Start Time	Range Road 3052 Southbound					Township Rd 352 Westbound					Range Road 3052 Northbound					Township Rd 352 Eastbound					
	Right	Thru	Left	U-Turn	App. Total	Right	Thru	Left	U-Turn	App. Total	Right	Thru	Left	U-Turn	App. Total	Right	Thru	Left	U-Turn	App. Total	Int. Total
5:15 PM	0	1	0	0	1	0	3	1	0	4	0	0	0	0	0	0	4	0	0	4	9
5:30 PM	0	1	0	0	1	0	1	2	0	3	0	0	0	0	0	0	2	0	0	2	6
5:45 PM	0	0	0	0	0	1	2	0	0	3	0	0	1	0	1	0	5	0	0	5	9
6:00 PM	0	0	0	0	0	0	5	0	0	5	0	1	0	0	1	0	1	0	0	1	7
Total	0	2	0	0	2	1	11	3	0	15	0	1	1	0	2	0	12	0	0	12	31
Approach %	0.0	100.0	0.0	0.0	-	6.7	73.3	20.0	0.0	-	0.0	50.0	50.0	0.0	-	0.0	100.0	0.0	0.0	-	-
Total %	0.0	6.5	0.0	0.0	6.5	3.2	35.5	9.7	0.0	48.4	0.0	3.2	3.2	0.0	6.5	0.0	38.7	0.0	0.0	38.7	-
PHF	0.000	0.500	0.000	0.000	0.500	0.250	0.550	0.375	0.000	0.750	0.000	0.250	0.250	0.000	0.500	0.000	0.600	0.000	0.000	0.600	0.861
Lights	0	2	0	0	2	1	10	3	0	14	0	1	1	0	2	0	12	0	0	12	30
% Lights	-	100.0	-	-	100.0	100.0	90.9	100.0	-	93.3	-	100.0	100.0	-	100.0	-	100.0	-	-	100.0	96.8
Other Vehicles	0	0	0	0	0	0	1	0	0	1	0	0	0	0	0	0	0	0	0	0	1
% Other Vehicles	-	0.0	-	-	0.0	0.0	9.1	0.0	-	6.7	-	0.0	0.0	-	0.0	-	0.0	-	-	0.0	3.2

Stantec Consulting Ltd.
300 - 1919 Rose St

Regina, Saskatchewan, Canada S4P 3P1
306 781 6400 erin.harms@stantec.com

Count Name: T12(Township Rd 352 & Range Road 3052)
Site Code:
Start Date: 05-23-2023

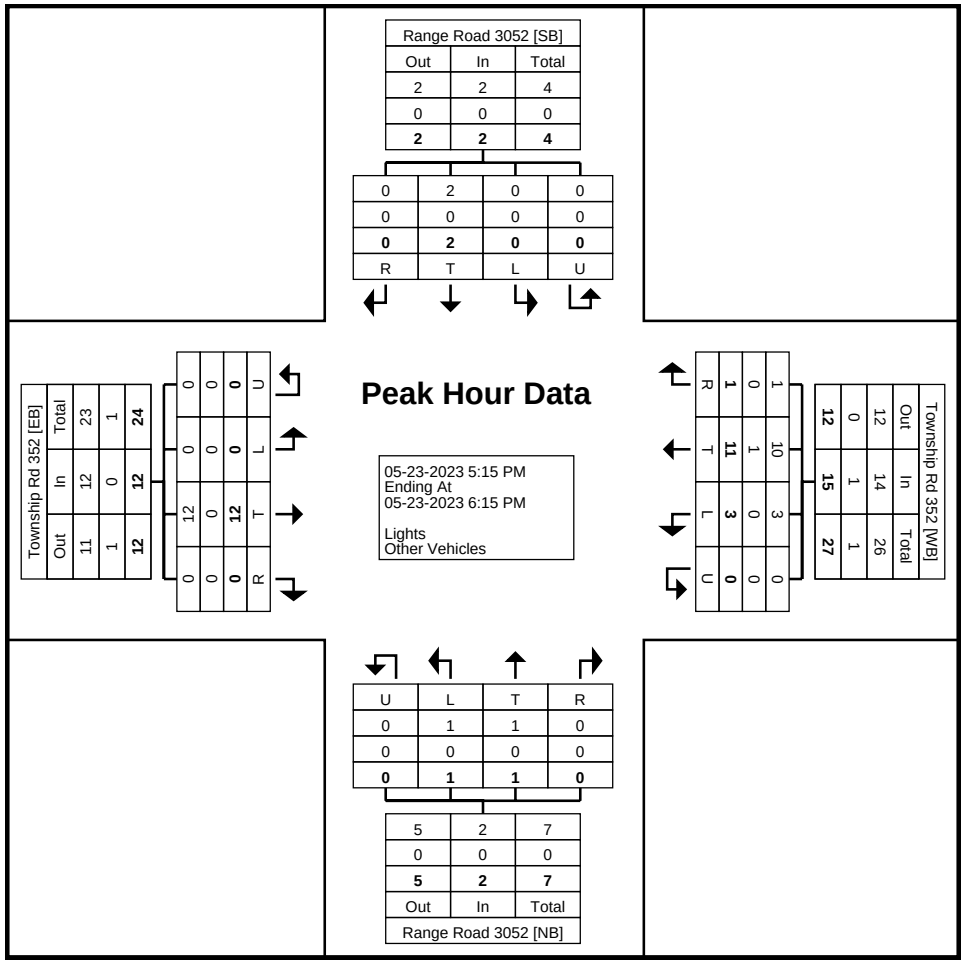

Turning Movement Peak Hour Data Plot (5:15 PM)

Stantec Consulting Ltd.
300 - 1919 Rose St

Regina, Saskatchewan, Canada S4P 3P1
306 781 6400 erin.harms@stantec.com

Count Name: T12(Township Rd 352 & Range Road 3052)
Site Code:
Start Date: 05-23-2023

Turning Movement Peak Hour Data (7:15 AM)

Start Time	Range Road 3052 Southbound					Township Rd 352 Westbound					Range Road 3052 Northbound					Township Rd 352 Eastbound					
	Right	Thru	Left	U-Turn	App. Total	Right	Thru	Left	U-Turn	App. Total	Right	Thru	Left	U-Turn	App. Total	Right	Thru	Left	U-Turn	App. Total	Int. Total
7:15 AM	0	0	0	0	0	0	0	0	0	0	0	1	1	0	2	0	1	0	0	1	3
7:30 AM	0	0	0	0	0	0	1	0	1	2	1	0	2	0	3	0	1	0	0	1	6
7:45 AM	1	0	0	0	1	0	6	0	0	6	0	0	0	0	0	0	1	1	0	2	9
8:00 AM	0	0	0	0	0	0	2	0	0	2	1	1	0	0	2	1	0	0	0	1	5
Total	1	0	0	0	1	0	9	0	1	10	2	2	3	0	7	1	3	1	0	5	23
Approach %	100.0	0.0	0.0	0.0	-	0.0	90.0	0.0	10.0	-	28.6	28.6	42.9	0.0	-	20.0	60.0	20.0	0.0	-	-
Total %	4.3	0.0	0.0	0.0	4.3	0.0	39.1	0.0	4.3	43.5	8.7	8.7	13.0	0.0	30.4	4.3	13.0	4.3	0.0	21.7	-
PHF	0.250	0.000	0.000	0.000	0.250	0.000	0.375	0.000	0.250	0.417	0.500	0.500	0.375	0.000	0.583	0.250	0.750	0.250	0.000	0.625	0.639
Lights	0	0	0	0	0	0	7	0	1	8	1	2	2	0	5	0	2	0	0	2	15
% Lights	0.0	-	-	-	0.0	-	77.8	-	100.0	80.0	50.0	100.0	66.7	-	71.4	0.0	66.7	0.0	-	40.0	65.2
Other Vehicles	1	0	0	0	1	0	2	0	0	2	1	0	1	0	2	1	1	1	0	3	8
% Other Vehicles	100.0	-	-	-	100.0	-	22.2	-	0.0	20.0	50.0	0.0	33.3	-	28.6	100.0	33.3	100.0	-	60.0	34.8

Stantec Consulting Ltd.
300 - 1919 Rose St

Regina, Saskatchewan, Canada S4P 3P1
306 781 6400 erin.harms@stantec.com

Count Name: T12(Township Rd 352 & Range Road 3052)
Site Code:
Start Date: 05-23-2023
Page No: 8

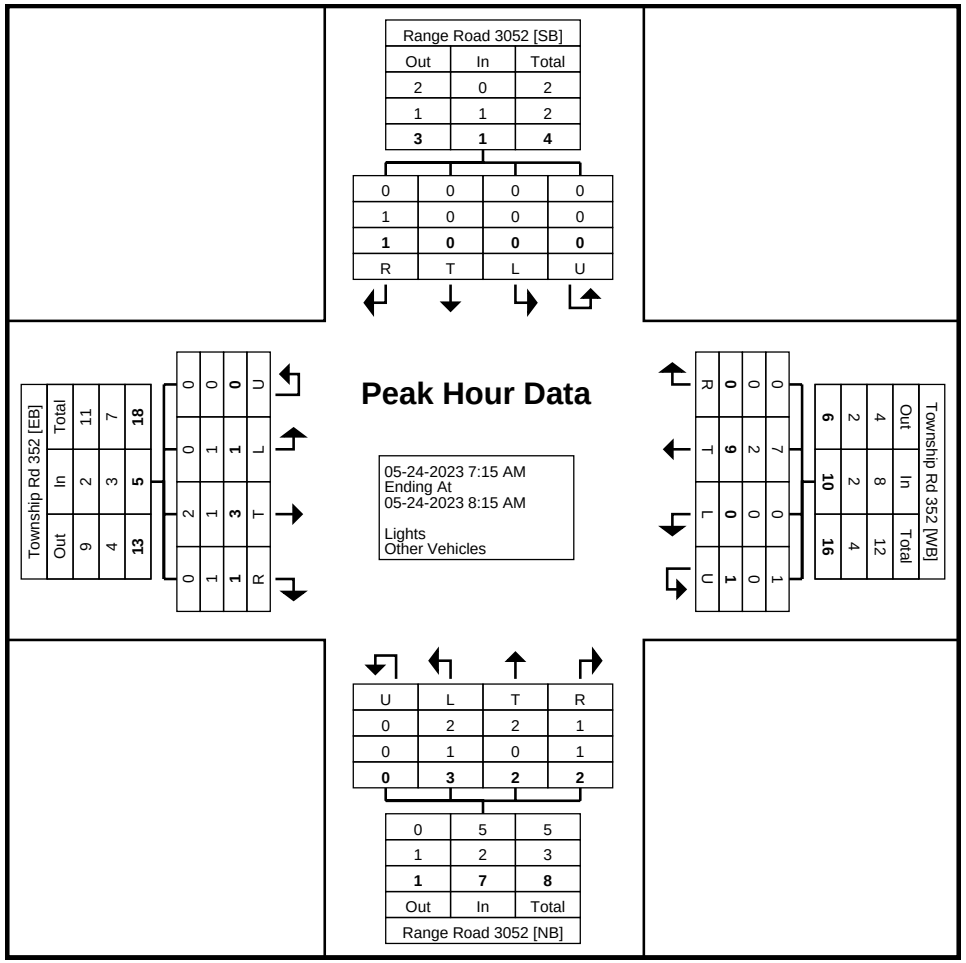

Turning Movement Peak Hour Data Plot (7:15 AM)

Stantec Consulting Ltd.
300 - 1919 Rose St

Regina, Saskatchewan, Canada S4P 3P1
306 781 6400 erin.harms@stantec.com

Count Name: T13-1 (Clarence Ave S & Township Rd 352)
Site Code:
Start Date: 05-23-2023

Turning Movement Data

Start Time	Clarence Ave S Southbound					Township Rd 352 Westbound					Clarence Ave S Northbound					Township Rd 352 Eastbound					
	Right	Thru	Left	U-Turn	App. Total	Right	Thru	Left	U-Turn	App. Total	Right	Thru	Left	U-Turn	App. Total	Right	Thru	Left	U-Turn	App. Total	Int. Total
12:00 PM	0	0	1	0	1	0	0	0	0	0	0	1	0	0	1	0	0	0	0	0	2
12:15 PM	0	0	1	0	1	0	0	0	0	0	1	2	0	0	3	0	0	0	0	0	4
12:30 PM	1	0	1	0	2	1	0	1	0	2	0	1	0	0	1	0	0	0	0	0	5
12:45 PM	1	1	0	0	2	0	0	0	0	0	0	0	0	0	0	0	0	0	0	0	2
Hourly Total	2	1	3	0	6	1	0	1	0	2	1	4	0	0	5	0	0	0	0	0	13
1:00 PM	1	2	0	0	3	0	0	0	0	0	0	1	0	0	1	0	0	1	0	1	5
1:15 PM	0	0	0	0	0	0	0	0	0	0	0	2	1	0	3	1	0	1	0	2	5
1:30 PM	0	0	0	0	0	1	0	1	0	2	1	1	0	0	2	0	0	0	0	0	4
1:45 PM	1	0	0	0	1	0	1	0	0	1	0	0	0	0	0	0	0	0	0	0	2
Hourly Total	2	2	0	0	4	1	1	1	0	3	1	4	1	0	6	1	0	2	0	3	16
2:00 PM	0	2	1	0	3	0	0	0	1	1	0	2	0	0	2	0	0	0	0	0	6
2:15 PM	0	2	1	0	3	1	0	1	0	2	0	1	0	0	1	0	1	0	0	1	7
2:30 PM	0	0	0	0	0	0	2	0	0	2	0	0	0	0	0	0	0	0	0	0	2
2:45 PM	0	1	1	0	2	0	0	2	0	2	0	0	0	0	0	1	0	0	0	1	5
Hourly Total	0	5	3	0	8	1	2	3	1	7	0	3	0	0	3	1	1	0	0	2	20
3:00 PM	1	2	0	0	3	0	0	0	0	0	0	1	0	0	1	0	1	0	0	1	5
3:15 PM	0	2	0	0	2	0	0	1	0	1	0	0	0	0	0	0	0	0	0	0	3
3:30 PM	0	0	0	0	0	1	0	0	0	1	1	1	0	0	2	0	0	0	0	0	3
3:45 PM	0	3	1	0	4	1	0	2	0	3	1	2	0	0	3	0	0	0	0	0	10
Hourly Total	1	7	1	0	9	2	0	3	0	5	2	4	0	0	6	0	1	0	0	1	21
Grand Total	5	15	7	0	27	5	3	8	1	17	4	15	1	0	20	2	2	2	2	0	6	70
Approach %	18.5	55.6	25.9	0.0	-	29.4	17.6	47.1	5.9	-	20.0	75.0	5.0	0.0	-	33.3	33.3	33.3	0.0	-	-
Total %	7.1	21.4	10.0	0.0	38.6	7.1	4.3	11.4	1.4	24.3	5.7	21.4	1.4	0.0	28.6	2.9	2.9	2.9	0.0	8.6	-
Lights	4	13	7	0	24	2	3	8	1	14	2	11	1	0	14	2	2	2	0	6	58
% Lights	80.0	86.7	100.0	-	88.9	40.0	100.0	100.0	100.0	82.4	50.0	73.3	100.0	-	70.0	100.0	100.0	100.0	-	100.0	82.9
Other Vehicles	1	2	0	0	3	3	0	0	0	3	2	4	0	0	6	0	0	0	0	0	12
% Other Vehicles	20.0	13.3	0.0	-	11.1	60.0	0.0	0.0	0.0	17.6	50.0	26.7	0.0	-	30.0	0.0	0.0	0.0	-	0.0	17.1

Stantec Consulting Ltd.
300 - 1919 Rose St

Regina, Saskatchewan, Canada S4P 3P1
306 781 6400 erin.harms@stantec.com

Count Name: T13-1 (Clarence Ave S & Township Rd 352)
Site Code:
Start Date: 05-23-2023

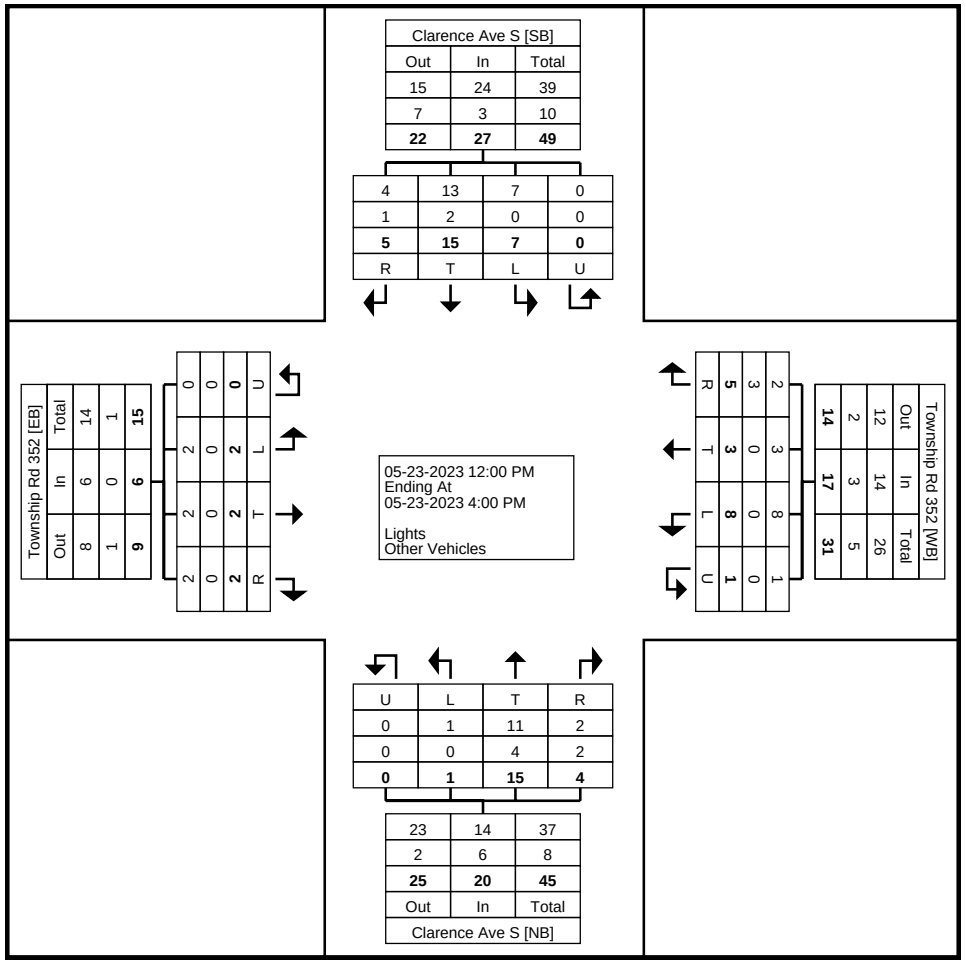

Turning Movement Data Plot

Stantec Consulting Ltd.
300 - 1919 Rose St

Regina, Saskatchewan, Canada S4P 3P1
306 781 6400 erin.harms@stantec.com

Count Name: T13-1 (Clarence Ave S & Township Rd 352)
Site Code:
Start Date: 05-23-2023

Turning Movement Peak Hour Data (3:00 PM)

Start Time	Clarence Ave S Southbound					Township Rd 352 Westbound					Clarence Ave S Northbound					Township Rd 352 Eastbound					
	Right	Thru	Left	U-Turn	App. Total	Right	Thru	Left	U-Turn	App. Total	Right	Thru	Left	U-Turn	App. Total	Right	Thru	Left	U-Turn	App. Total	Int. Total
3:00 PM	1	2	0	0	3	0	0	0	0	0	0	1	0	0	1	0	1	0	0	1	5
3:15 PM	0	2	0	0	2	0	0	1	0	1	0	0	0	0	0	0	0	0	0	0	3
3:30 PM	0	0	0	0	0	1	0	0	0	1	1	1	0	0	2	0	0	0	0	0	3
3:45 PM	0	3	1	0	4	1	0	2	0	3	1	2	0	0	3	0	0	0	0	0	10
Total	1	7	1	0	9	2	0	3	0	5	2	4	0	0	6	0	1	0	0	1	21
Approach %	11.1	77.8	11.1	0.0	-	40.0	0.0	60.0	0.0	-	33.3	66.7	0.0	0.0	-	0.0	100.0	0.0	0.0	-	-
Total %	4.8	33.3	4.8	0.0	42.9	9.5	0.0	14.3	0.0	23.8	9.5	19.0	0.0	0.0	28.6	0.0	4.8	0.0	0.0	4.8	-
PHF	0.250	0.583	0.250	0.000	0.563	0.500	0.000	0.375	0.000	0.417	0.500	0.500	0.000	0.000	0.500	0.000	0.250	0.000	0.000	0.250	0.525
Lights	1	5	1	0	7	0	0	3	0	3	1	3	0	0	4	0	1	0	0	1	15
% Lights	100.0	71.4	100.0	-	77.8	0.0	-	100.0	-	60.0	50.0	75.0	-	-	66.7	-	100.0	-	-	100.0	71.4
Other Vehicles	0	2	0	0	2	2	0	0	0	2	1	1	0	0	2	0	0	0	0	0	6
% Other Vehicles	0.0	28.6	0.0	-	22.2	100.0	-	0.0	-	40.0	50.0	25.0	-	-	33.3	-	0.0	-	-	0.0	28.6

Stantec Consulting Ltd.
300 - 1919 Rose St

Regina, Saskatchewan, Canada S4P 3P1
306 781 6400 erin.harms@stantec.com

Count Name: T13-1 (Clarence Ave S & Township Rd 352)
Site Code:
Start Date: 05-23-2023

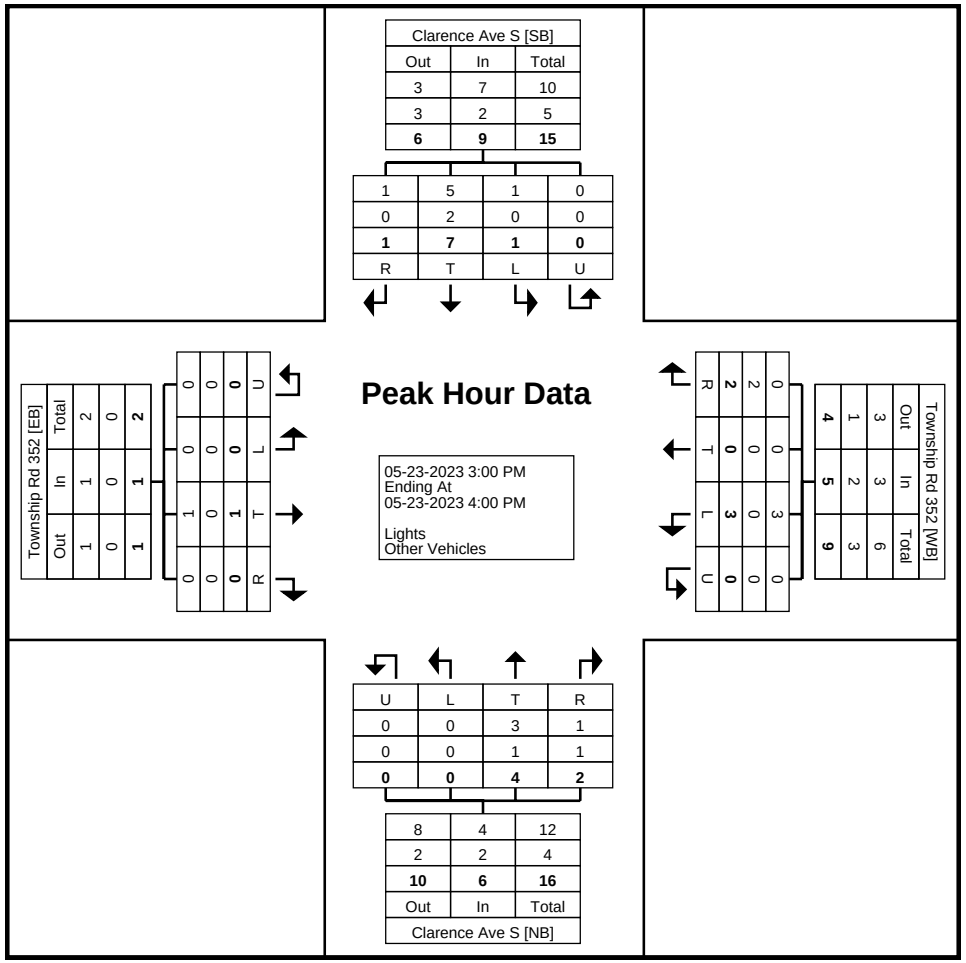

Turning Movement Peak Hour Data Plot (3:00 PM)

Stantec Consulting Ltd.
300 - 1919 Rose St

Regina, Saskatchewan, Canada S4P 3P1
306 781 6400 erin.harms@stantec.com

Count Name: T13-2 (Clarence Ave S & Township Rd 352)
Site Code:
Start Date: 06-05-2023

Turning Movement Data

Start Time	Clarence Ave S Southbound					Township Rd 352 Westbound					Clarence Ave S Northbound					Township Rd 352 Eastbound					
	Right	Thru	Left	U-Turn	App. Total	Right	Thru	Left	U-Turn	App. Total	Right	Thru	Left	U-Turn	App. Total	Right	Thru	Left	U-Turn	App. Total	Int. Total
4:00 PM	0	1	0	0	1	0	1	0	0	1	1	0	1	0	2	0	2	0	0	2	6
4:15 PM	0	0	0	0	0	0	1	0	0	1	0	0	1	0	1	0	4	0	0	4	6
4:30 PM	0	0	0	0	0	0	1	0	0	1	2	0	0	0	2	0	1	0	0	1	4
4:45 PM	0	0	0	0	0	0	1	0	0	1	0	0	1	0	1	0	0	0	0	0	2
Hourly Total	0	1	0	0	1	0	4	0	0	4	3	0	3	0	6	0	7	0	0	7	18
5:00 PM	0	0	0	0	0	0	0	0	0	0	1	1	0	0	2	0	0	0	0	0	2
5:15 PM	0	0	0	0	0	0	1	1	0	2	0	0	1	0	1	0	0	0	0	0	3
5:30 PM	0	0	0	0	0	0	2	0	0	2	0	0	0	0	0	2	0	0	0	2	4
5:45 PM	0	0	0	0	0	0	0	0	0	0	0	0	0	0	0	0	0	0	0	0	0
Hourly Total	0	0	0	0	0	0	3	1	0	4	1	1	1	0	3	2	0	0	0	2	9
6:00 PM	0	0	0	0	0	0	2	1	0	3	0	1	1	0	2	1	0	0	0	1	6
6:15 PM	0	0	0	0	0	0	0	2	0	2	0	0	1	0	1	0	3	0	0	3	6
6:30 PM	0	0	0	0	0	1	1	0	0	2	0	0	0	0	0	0	0	0	0	0	2
6:45 PM	0	0	0	0	0	0	0	0	0	0	0	0	0	0	0	1	3	0	0	4	4
Hourly Total	0	0	0	0	0	1	3	3	0	7	0	1	2	0	3	2	6	0	0	8	18
7:00 PM	0	0	0	0	0	0	1	0	0	1	0	0	0	0	0	1	0	0	0	1	2
7:15 PM	0	1	0	0	1	0	4	0	0	4	2	0	2	0	4	0	1	0	0	1	10
7:30 PM	0	0	0	0	0	0	1	0	0	1	2	0	0	0	2	2	4	0	0	6	9
7:45 PM	0	0	0	0	0	0	0	0	0	0	0	0	0	0	0	2	2	0	0	4	4
Hourly Total	0	1	0	0	1	0	6	0	0	6	4	0	2	0	6	5	7	0	0	12	25
8:00 PM	0	0	0	0	0	0	1	0	0	1	0	0	1	0	1	0	1	0	0	1	3
8:15 PM	0	0	0	0	0	0	1	0	0	1	0	0	0	0	0	0	1	0	0	1	2
8:30 PM	0	0	0	0	0	0	0	0	0	0	1	0	0	0	1	0	1	0	0	1	2
8:45 PM	0	0	0	0	0	0	0	0	0	0	0	0	0	0	0	0	0	0	0	0	0
Hourly Total	0	0	0	0	0	0	2	0	0	2	1	0	1	0	2	0	3	0	0	3	7
9:00 PM	0	0	0	0	0	0	0	0	0	0	1	0	1	0	2	0	0	0	0	0	2
9:15 PM	0	0	0	0	0	0	1	0	0	1	1	0	0	0	1	0	0	0	0	0	2
9:30 PM	0	0	0	0	0	0	4	0	0	4	0	1	0	0	1	0	0	0	0	0	5
9:45 PM	0	0	1	0	1	0	0	0	0	0	0	0	0	0	0	0	0	0	0	0	1
Hourly Total	0	0	1	0	1	0	5	0	0	5	2	1	1	0	4	0	0	0	0	0	10
10:00 PM	0	0	0	0	0	0	0	0	0	0	0	0	0	0	0	0	0	0	0	0	0
10:15 PM	0	1	0	0	1	0	0	0	0	0	0	1	2	0	3	0	0	0	0	0	4
10:30 PM	0	0	0	0	0	0	0	0	0	0	0	0	0	0	0	0	0	0	0	0	0
10:45 PM	0	0	0	0	0	0	0	0	0	0	0	0	0	0	0	0	0	0	0	0	0
Hourly Total	0	1	0	0	1	0	0	0	0	0	0	1	2	0	3	0	0	0	0	0	4
11:00 PM	0	0	0	0	0	0	0	0	0	0	0	0	0	0	0	0	0	0	0	0	0

11:15 PM	0	0	0	0	0	0	0	0	0	0	0	0	0	0	0	0	0	0	0	0	0
11:30 PM	0	0	0	0	0	0	0	0	0	0	0	0	0	0	0	0	0	0	0	0	0
11:45 PM	0	0	0	0	0	0	0	0	0	0	0	0	0	0	0	0	0	0	0	0	0
Hourly Total	0	0	0	0	0	0	0	0	0	0	0	0	0	0	0	0	0	0	0	0	0
12:00 AM	0	0	0	0	0	0	0	0	0	0	0	0	0	0	0	0	0	0	0	0	0
12:15 AM	0	0	0	0	0	0	0	0	0	0	0	0	0	0	0	0	0	0	0	0	0
12:30 AM	0	0	0	0	0	0	0	0	0	0	0	0	0	0	0	0	0	0	0	0	0
12:45 AM	0	0	0	0	0	0	0	0	0	0	0	0	0	0	0	0	0	0	0	0	0
Hourly Total	0	0	0	0	0	0	0	0	0	0	0	0	0	0	0	0	0	0	0	0	0
1:00 AM	0	0	0	0	0	0	0	0	0	0	0	0	0	0	0	0	0	0	0	0	0
1:15 AM	0	0	0	0	0	0	0	0	0	0	0	0	0	0	0	0	0	0	0	0	0
1:30 AM	0	0	0	0	0	0	0	0	0	0	0	0	0	0	0	0	0	0	0	0	0
1:45 AM	0	0	0	0	0	0	0	0	0	0	0	0	0	0	0	0	0	0	0	0	0
Hourly Total	0	0	0	0	0	0	0	0	0	0	0	0	0	0	0	0	0	0	0	0	0
2:00 AM	0	0	0	0	0	0	0	0	0	0	0	0	0	0	0	0	0	0	0	0	0
2:15 AM	0	0	0	0	0	0	0	0	0	0	0	0	0	0	0	0	0	0	0	0	0
2:30 AM	0	0	0	0	0	0	0	0	0	0	0	0	0	0	0	0	0	0	0	0	0
2:45 AM	0	0	0	0	0	0	0	0	0	0	0	0	0	0	0	0	0	0	0	0	0
Hourly Total	0	0	0	0	0	0	0	0	0	0	0	0	0	0	0	0	0	0	0	0	0
3:00 AM	0	1	0	0	1	0	0	0	0	0	0	0	0	0	0	0	0	0	0	0	1
3:15 AM	0	0	0	0	0	0	0	0	0	0	0	0	0	0	0	0	0	0	0	0	0
3:30 AM	0	0	0	0	0	0	0	0	0	0	0	0	0	0	0	0	0	0	0	0	0
3:45 AM	0	0	0	0	0	0	0	0	0	0	0	0	0	0	0	0	0	0	0	0	0
Hourly Total	0	1	0	0	1	0	0	0	0	0	0	0	0	0	0	0	0	0	0	0	1
4:00 AM	0	0	0	0	0	0	0	0	0	0	0	0	0	0	0	0	0	0	0	0	0
4:15 AM	0	0	0	0	0	0	1	0	0	1	0	0	0	0	0	0	0	0	0	0	1
4:30 AM	0	0	0	0	0	0	0	0	0	0	0	0	0	0	0	0	1	0	0	1	1
4:45 AM	0	0	0	0	0	0	0	0	0	0	0	0	0	0	0	0	1	0	0	1	1
Hourly Total	0	0	0	0	0	0	1	0	0	1	0	0	0	0	0	0	2	0	0	2	3
5:00 AM	0	0	1	0	1	0	0	0	0	0	0	0	0	0	0	0	0	0	0	0	1
5:15 AM	0	0	0	0	0	0	0	0	0	0	0	0	0	0	0	0	0	0	0	0	0
5:30 AM	0	0	0	0	0	1	0	0	0	1	0	0	0	0	0	0	1	0	0	1	2
5:45 AM	0	0	0	0	0	0	1	0	0	1	0	0	0	0	0	0	0	0	0	0	1
Hourly Total	0	0	1	0	1	1	1	0	0	2	0	0	0	0	0	0	1	0	0	1	4
6:00 AM	0	0	0	0	0	0	1	0	0	1	0	0	0	0	0	0	0	0	0	0	1
6:15 AM	0	0	0	0	0	0	0	0	0	0	0	0	0	0	0	0	1	0	0	1	1
6:30 AM	0	0	0	0	0	0	0	0	0	0	0	0	0	0	0	1	1	0	0	2	2
6:45 AM	0	0	2	0	2	0	0	0	0	0	0	0	0	0	0	0	1	0	0	1	3
Hourly Total	0	0	2	0	2	0	1	0	0	1	0	0	0	0	0	1	3	0	0	4	7
7:00 AM	0	0	0	0	0	0	1	0	0	1	0	0	0	0	0	0	3	0	0	3	4
7:15 AM	0	0	0	0	0	0	1	0	0	1	0	0	0	0	0	0	3	0	0	3	4
7:30 AM	0	0	0	0	0	0	0	0	0	0	1	0	0	0	1	1	2	0	0	3	4
7:45 AM	0	0	0	0	0	0	2	0	0	2	0	0	1	0	1	0	1	0	0	1	4
Hourly Total	0	0	0	0	0	0	4	0	0	4	1	0	1	0	2	1	9	0	0	10	16
8:00 AM	0	0	0	0	0	0	0	0	0	0	0	0	0	0	0	0	1	0	0	1	1
8:15 AM	0	0	0	0	0	1	0	0	0	1	0	1	0	0	1	0	1	0	0	1	3
8:30 AM	1	0	1	0	2	0	2	2	0	4	0	0	0	0	0	0	2	0	0	2	8
8:45 AM	0	0	0	0	0	0	1	0	0	1	0	0	1	0	1	0	2	0	0	2	4
Hourly Total	1	0	1	0	2	1	3	2	0	6	0	1	1	0	2	0	6	0	0	6	16
9:00 AM	0	0	0	0	0	0	1	0	0	1	0	0	0	0	0	0	3	0	0	3	4
9:15 AM	0	0	0	0	0	0	0	1	0	1	0	1	1	0	2	1	1	0	0	2	5
9:30 AM	0	0	0	0	0	0	0	0	0	0	0	0	0	0	0	0	0	0	0	0	0

9:45 AM	0	0	0	0	0	0	1	0	0	1	0	0	1	0	1	0	2	0	0	2	4
Hourly Total	0	0	0	0	0	0	2	1	0	3	0	1	2	0	3	1	6	0	0	7	13
10:00 AM	1	0	0	0	1	0	0	0	0	0	0	0	0	0	0	0	2	1	0	3	4
10:15 AM	0	1	0	0	1	0	0	0	0	0	1	0	1	0	2	0	0	1	0	1	4
10:30 AM	0	0	0	0	0	0	1	1	0	2	0	0	1	0	1	1	5	0	0	6	9
10:45 AM	0	0	0	0	0	0	1	0	0	1	0	0	1	0	1	0	1	0	0	1	3
Hourly Total	1	1	0	0	2	0	2	1	0	3	1	0	3	0	4	1	8	2	0	11	20
11:00 AM	0	0	0	0	0	0	1	0	0	1	2	0	0	0	2	0	2	0	0	2	5
11:15 AM	0	1	0	0	1	0	0	0	0	0	0	0	0	0	0	0	0	1	0	1	2
11:30 AM	0	1	0	0	1	0	0	0	0	0	0	0	1	0	1	1	1	0	0	2	4
11:45 AM	0	2	0	0	2	1	1	0	0	2	1	1	0	0	2	0	1	1	0	2	8
Hourly Total	0	4	0	0	4	1	2	0	0	3	3	1	1	0	5	1	4	2	0	7	19
Grand Total	2	9	5	0	16	4	39	8	0	51	16	7	20	0	43	14	62	4	0	80	190
Approach %	12.5	56.3	31.3	0.0	-	7.8	76.5	15.7	0.0	-	37.2	16.3	46.5	0.0	-	17.5	77.5	5.0	0.0	-	-
Total %	1.1	4.7	2.6	0.0	8.4	2.1	20.5	4.2	0.0	26.8	8.4	3.7	10.5	0.0	22.6	7.4	32.6	2.1	0.0	42.1	-
Lights	1	8	5	0	14	3	36	7	0	46	15	6	20	0	41	12	59	3	0	74	175
% Lights	50.0	88.9	100.0	-	87.5	75.0	92.3	87.5	-	90.2	93.8	85.7	100.0	-	95.3	85.7	95.2	75.0	-	92.5	92.1
Other Vehicles	1	1	0	0	2	1	3	1	0	5	1	1	0	0	2	2	3	1	0	6	15
% Other Vehicles	50.0	11.1	0.0	-	12.5	25.0	7.7	12.5	-	9.8	6.3	14.3	0.0	-	4.7	14.3	4.8	25.0	-	7.5	7.9

Stantec Consulting Ltd.
300 - 1919 Rose St

Regina, Saskatchewan, Canada S4P 3P1
306 781 6400 erin.harms@stantec.com

Count Name: T13-2 (Clarence Ave S & Township Rd 352)
Site Code:
Start Date: 06-05-2023

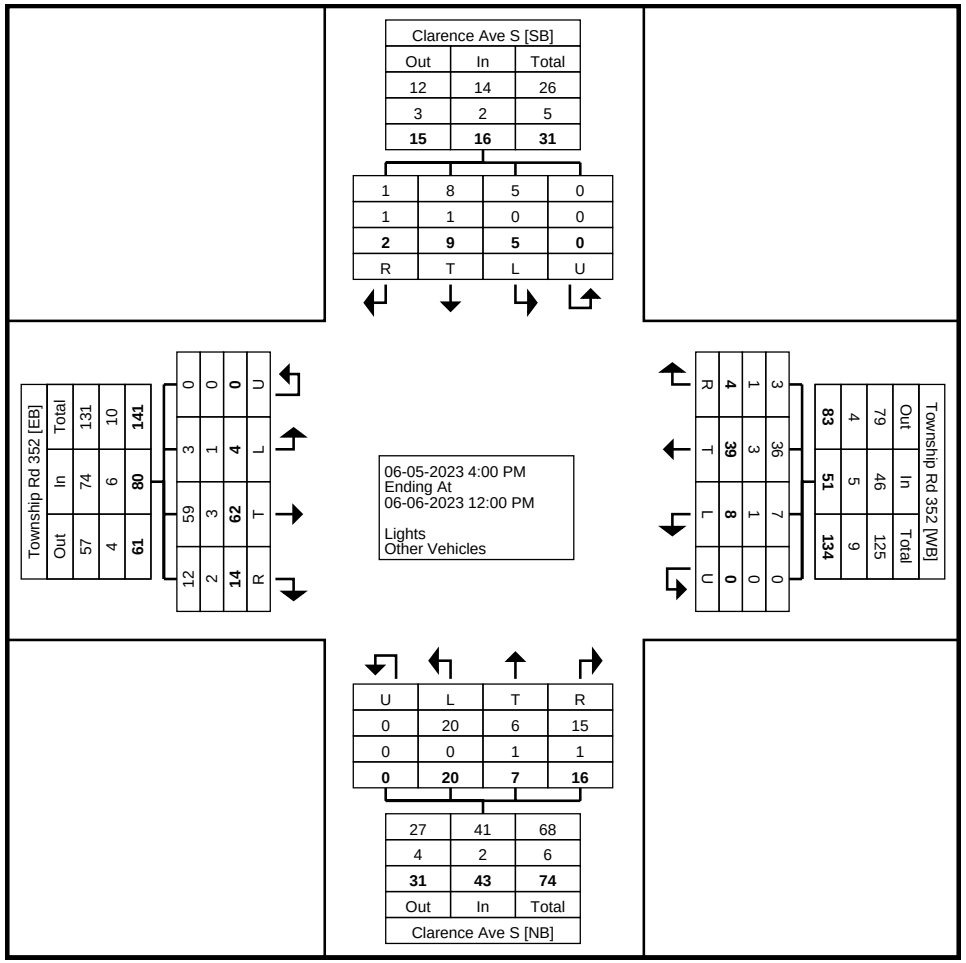

Turning Movement Data Plot

Stantec Consulting Ltd.
300 - 1919 Rose St

Regina, Saskatchewan, Canada S4P 3P1
306 781 6400 erin.harms@stantec.com

Count Name: T13-2 (Clarence Ave S & Township Rd 352)
Site Code:
Start Date: 06-05-2023

Turning Movement Peak Hour Data (7:15 PM)

Start Time	Clarence Ave S Southbound					Township Rd 352 Westbound					Clarence Ave S Northbound					Township Rd 352 Eastbound					
	Right	Thru	Left	U-Turn	App. Total	Right	Thru	Left	U-Turn	App. Total	Right	Thru	Left	U-Turn	App. Total	Right	Thru	Left	U-Turn	App. Total	Int. Total
7:15 PM	0	1	0	0	1	0	4	0	0	4	2	0	2	0	4	0	1	0	0	1	10
7:30 PM	0	0	0	0	0	0	1	0	0	1	2	0	0	0	2	2	4	0	0	6	9
7:45 PM	0	0	0	0	0	0	0	0	0	0	0	0	0	0	0	2	2	0	0	4	4
8:00 PM	0	0	0	0	0	0	1	0	0	1	0	0	1	0	1	0	1	0	0	1	3
Total	0	1	0	0	1	0	6	0	0	6	4	0	3	0	7	4	8	0	0	12	26
Approach %	0.0	100.0	0.0	0.0	-	0.0	100.0	0.0	0.0	-	57.1	0.0	42.9	0.0	-	33.3	66.7	0.0	0.0	-	-
Total %	0.0	3.8	0.0	0.0	3.8	0.0	23.1	0.0	0.0	23.1	15.4	0.0	11.5	0.0	26.9	15.4	30.8	0.0	0.0	46.2	-
PHF	0.000	0.250	0.000	0.000	0.250	0.000	0.375	0.000	0.000	0.375	0.500	0.000	0.375	0.000	0.438	0.500	0.500	0.000	0.000	0.500	0.650
Lights	0	1	0	0	1	0	6	0	0	6	3	0	3	0	6	3	8	0	0	11	24
% Lights	-	100.0	-	-	100.0	-	100.0	-	-	100.0	75.0	-	100.0	-	85.7	75.0	100.0	-	-	91.7	92.3
Other Vehicles	0	0	0	0	0	0	0	0	0	0	1	0	0	0	1	1	0	0	0	1	2
% Other Vehicles	-	0.0	-	-	0.0	-	0.0	-	-	0.0	25.0	-	0.0	-	14.3	25.0	0.0	-	-	8.3	7.7

Stantec Consulting Ltd.
300 - 1919 Rose St

Regina, Saskatchewan, Canada S4P 3P1
306 781 6400 erin.harms@stantec.com

Count Name: T13-2 (Clarence Ave S & Township Rd 352)
Site Code:
Start Date: 06-05-2023

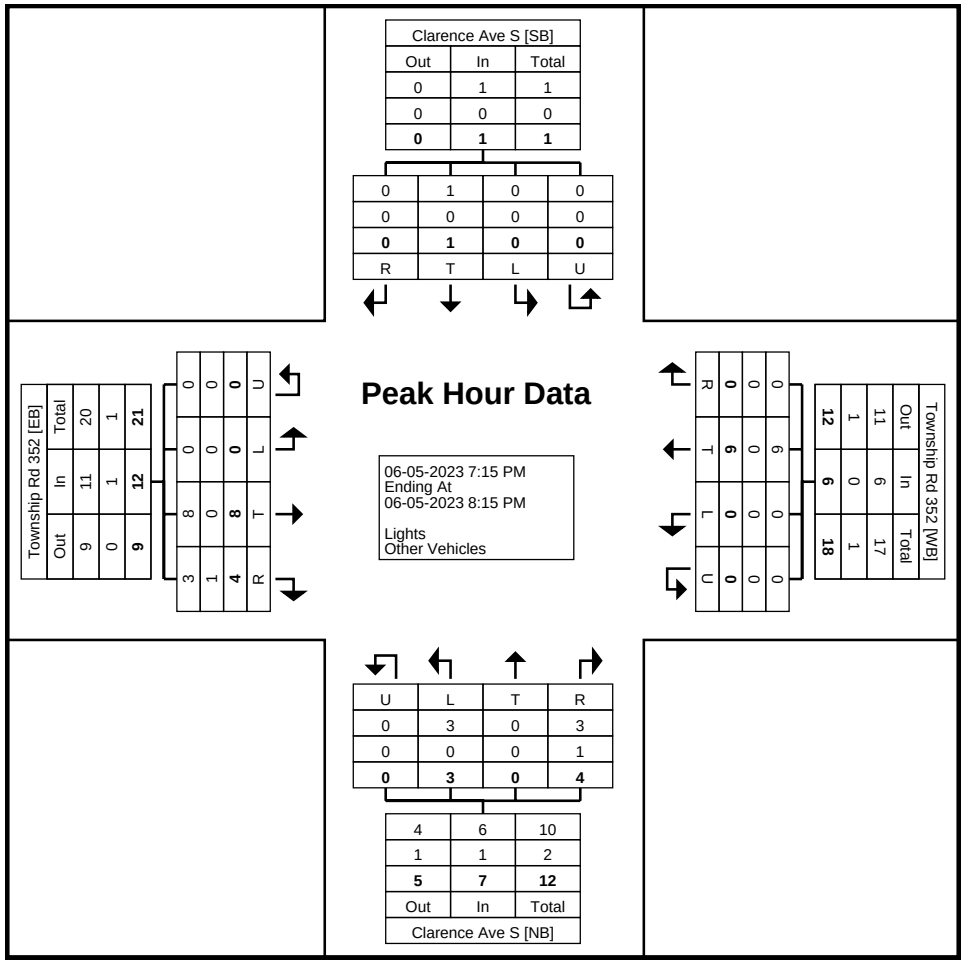

Turning Movement Peak Hour Data Plot (7:15 PM)

Stantec Consulting Ltd.
300 - 1919 Rose St

Regina, Saskatchewan, Canada S4P 3P1
306 781 6400 erin.harms@stantec.com

Count Name: T13-2 (Clarence Ave S & Township Rd 352)
Site Code:
Start Date: 06-05-2023

Turning Movement Peak Hour Data (8:30 AM)

Start Time	Clarence Ave S Southbound					Township Rd 352 Westbound					Clarence Ave S Northbound					Township Rd 352 Eastbound					
	Right	Thru	Left	U-Turn	App. Total	Right	Thru	Left	U-Turn	App. Total	Right	Thru	Left	U-Turn	App. Total	Right	Thru	Left	U-Turn	App. Total	Int. Total
8:30 AM	1	0	1	0	2	0	2	2	0	4	0	0	0	0	0	0	2	0	0	2	8
8:45 AM	0	0	0	0	0	0	1	0	0	1	0	0	1	0	1	0	2	0	0	2	4
9:00 AM	0	0	0	0	0	0	1	0	0	1	0	0	0	0	0	0	3	0	0	3	4
9:15 AM	0	0	0	0	0	0	0	1	0	1	0	1	1	0	2	1	1	0	0	2	5
Total	1	0	1	0	2	0	4	3	0	7	0	1	2	0	3	1	8	0	0	9	21
Approach %	50.0	0.0	50.0	0.0	-	0.0	57.1	42.9	0.0	-	0.0	33.3	66.7	0.0	-	11.1	88.9	0.0	0.0	-	-
Total %	4.8	0.0	4.8	0.0	9.5	0.0	19.0	14.3	0.0	33.3	0.0	4.8	9.5	0.0	14.3	4.8	38.1	0.0	0.0	42.9	-
PHF	0.250	0.000	0.250	0.000	0.250	0.000	0.500	0.375	0.000	0.438	0.000	0.250	0.500	0.000	0.375	0.250	0.667	0.000	0.000	0.750	0.656
Lights	0	0	1	0	1	0	4	2	0	6	0	1	2	0	3	1	7	0	0	8	18
% Lights	0.0	-	100.0	-	50.0	-	100.0	66.7	-	85.7	-	100.0	100.0	-	100.0	100.0	87.5	-	-	88.9	85.7
Other Vehicles	1	0	0	0	1	0	0	1	0	1	0	0	0	0	0	0	1	0	0	1	3
% Other Vehicles	100.0	-	0.0	-	50.0	-	0.0	33.3	-	14.3	-	0.0	0.0	-	0.0	0.0	12.5	-	-	11.1	14.3

Stantec Consulting Ltd.
300 - 1919 Rose St

Regina, Saskatchewan, Canada S4P 3P1
306 781 6400 erin.harms@stantec.com

Count Name: T13-2 (Clarence Ave S & Township Rd 352)
Site Code:
Start Date: 06-05-2023

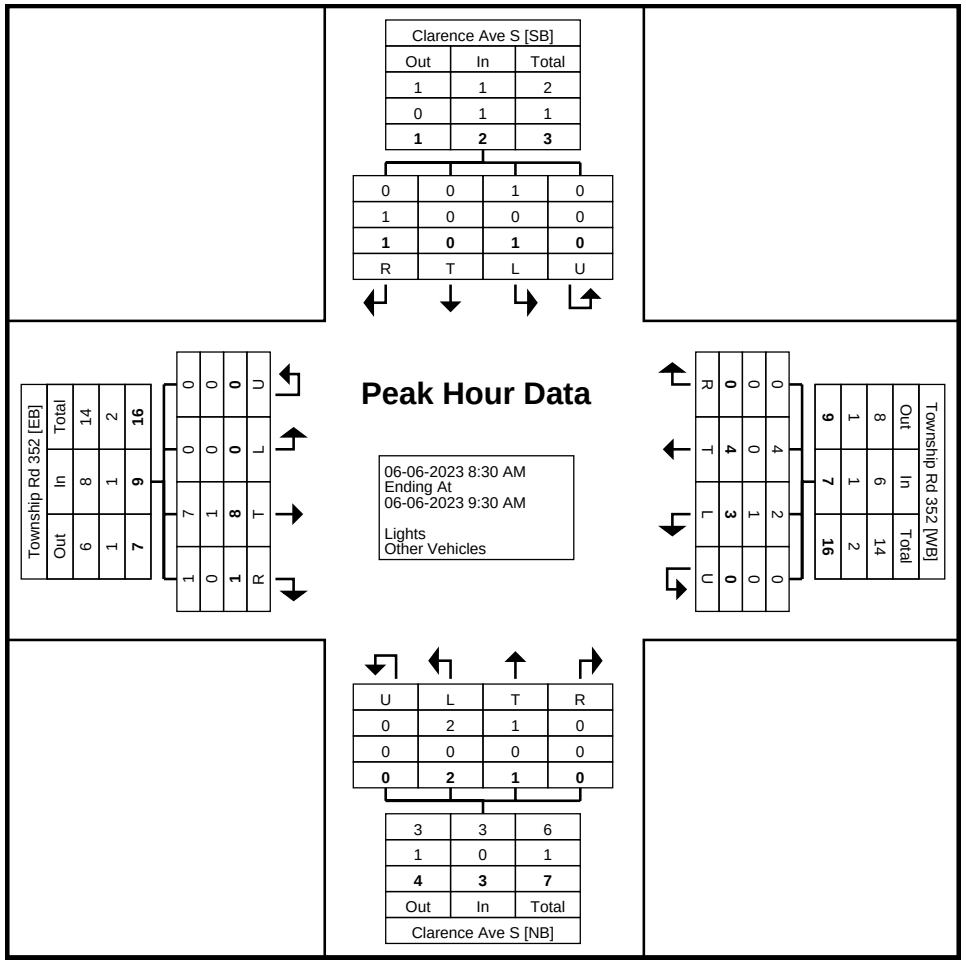

Turning Movement Peak Hour Data Plot (8:30 AM)

Stantec Consulting Ltd.
300 - 1919 Rose St

Regina, Saskatchewan, Canada S4P 3P1
306 781 6400 erin.harms@stantec.com

Count Name: T14 (Chief Whitecap Trail & Range Rd 3055)
Site Code:
Start Date: 06-05-2023

Turning Movement Data

Start Time	Range Rd 3055 Southbound					Chief Whitecap Trail Westbound					Range Rd 3055 Northbound					Chief Whitecap Trail Eastbound					
	Right	Thru	Left	U-Turn	App. Total	Right	Thru	Left	U-Turn	App. Total	Right	Thru	Left	U-Turn	App. Total	Right	Thru	Left	U-Turn	App. Total	Int. Total
2:00 PM	0	0	0	0	0	0	32	2	0	34	0	0	1	0	1	0	35	0	0	35	70
2:15 PM	0	0	0	0	0	0	22	0	0	22	0	0	0	0	0	0	25	0	0	25	47
2:30 PM	0	0	0	0	0	0	33	0	0	33	0	0	1	0	1	0	25	0	0	25	59
2:45 PM	1	0	0	0	1	1	24	0	0	25	1	0	0	0	1	0	29	0	0	29	56
Hourly Total	1	0	0	0	1	1	111	2	0	114	1	0	2	0	3	0	114	0	0	114	232
3:00 PM	0	0	0	0	0	0	27	0	0	27	0	0	0	0	0	0	31	0	0	31	58
3:15 PM	0	0	0	0	0	0	36	0	0	36	0	0	0	0	0	0	23	0	0	23	59
3:30 PM	0	0	0	0	0	0	31	0	0	31	0	0	0	0	0	0	30	0	0	30	61
3:45 PM	0	0	0	0	0	1	26	0	0	27	0	0	0	0	0	0	35	0	0	35	62
Hourly Total	0	0	0	0	0	1	120	0	0	121	0	0	0	0	0	0	119	0	0	119	240
4:00 PM	0	0	0	0	0	0	37	1	0	38	0	0	0	0	0	1	43	0	0	44	82
4:15 PM	0	0	0	0	0	1	50	0	0	51	2	0	0	0	2	0	58	0	0	58	111
4:30 PM	0	0	0	0	0	0	36	1	0	37	2	0	0	0	2	0	35	0	0	35	74
4:45 PM	0	0	0	0	0	0	29	3	0	32	0	0	0	0	0	1	54	0	0	55	87
Hourly Total	0	0	0	0	0	1	152	5	0	158	4	0	0	0	4	2	190	0	0	192	354
5:00 PM	1	0	0	0	1	0	33	0	0	33	0	0	0	0	0	0	49	0	0	49	83
5:15 PM	0	0	0	0	0	0	47	2	0	49	0	0	0	0	0	1	47	0	0	48	97
5:30 PM	0	1	0	0	1	0	51	0	0	51	1	0	0	0	1	0	29	1	0	30	83
5:45 PM	0	0	0	0	0	0	31	0	0	31	0	1	0	0	1	0	21	0	0	21	53
Hourly Total	1	1	0	0	2	0	162	2	0	164	1	1	0	0	2	1	146	1	0	148	316
6:00 PM	0	0	0	0	0	0	28	1	0	29	2	0	0	0	2	0	32	0	0	32	63
6:15 PM	0	0	0	0	0	0	28	1	0	29	1	0	0	1	2	1	31	0	0	32	63
6:30 PM	1	0	0	0	1	0	31	0	0	31	0	0	0	0	0	0	22	0	0	22	54
6:45 PM	0	0	0	0	0	0	26	0	0	26	0	0	0	0	0	0	13	0	0	13	39
Hourly Total	1	0	0	0	1	0	113	2	0	115	3	0	0	1	4	1	98	0	0	99	219
7:00 PM	0	0	1	0	1	0	15	0	0	15	0	0	0	0	0	0	21	0	0	21	37
7:15 PM	0	0	0	0	0	0	34	0	0	34	0	0	0	0	0	0	20	0	0	20	54
7:30 PM	0	0	0	0	0	0	19	3	0	22	0	0	0	0	0	0	15	0	0	15	37
7:45 PM	1	0	0	0	1	0	21	0	0	21	0	0	0	0	0	0	19	0	0	19	41
Hourly Total	1	0	1	0	2	0	89	3	0	92	0	0	0	0	0	0	75	0	0	75	169
8:00 PM	1	0	0	0	1	1	24	2	0	27	0	0	0	0	0	0	20	0	0	20	48
8:15 PM	0	0	0	0	0	0	18	0	0	18	0	0	0	0	0	0	24	0	0	24	42
8:30 PM	0	0	0	0	0	0	31	2	0	33	1	0	0	0	1	0	28	0	0	28	62
8:45 PM	0	0	0	0	0	0	20	1	0	21	0	0	1	0	1	0	18	1	0	19	41
Hourly Total	1	0	0	0	1	1	93	5	0	99	1	0	1	0	2	0	90	1	0	91	193
9:00 PM	0	0	0	0	0	0	13	0	0	13	1	0	0	0	1	1	25	0	0	26	40

9:15 PM	0	1	0	0	1	0	20	0	0	20	1	0	0	0	1	0	19	0	0	19	41
9:30 PM	0	0	0	0	0	1	20	0	0	21	0	0	0	0	0	0	15	0	0	15	36
9:45 PM	0	0	0	0	0	0	13	0	0	13	0	0	0	0	0	0	24	0	0	24	37
Hourly Total	0	1	0	0	1	1	66	0	0	67	2	0	0	0	2	1	83	0	0	84	154
10:00 PM	0	0	0	0	0	0	11	1	0	12	0	0	0	0	0	0	13	0	0	13	25
10:15 PM	0	0	0	0	0	0	10	0	0	10	0	0	0	0	0	0	23	0	0	23	33
10:30 PM	0	0	0	0	0	0	10	0	0	10	0	0	0	0	0	0	21	0	0	21	31
10:45 PM	0	0	0	0	0	0	12	0	0	12	0	0	0	0	0	0	16	0	0	16	28
Hourly Total	0	0	0	0	0	0	43	1	0	44	0	0	0	0	0	0	73	0	0	73	117
11:00 PM	0	0	0	0	0	0	7	0	0	7	0	0	0	0	0	0	7	0	0	7	14
11:15 PM	0	0	0	0	0	0	6	0	0	6	0	0	0	0	0	0	20	0	0	20	26
11:30 PM	0	0	0	0	0	0	10	0	0	10	0	0	0	0	0	0	9	0	0	9	19
11:45 PM	0	0	0	0	0	0	4	0	0	4	0	0	0	0	0	0	7	0	0	7	11
Hourly Total	0	0	0	0	0	0	27	0	0	27	0	0	0	0	0	0	43	0	0	43	70
12:00 AM	0	0	0	0	0	0	6	0	0	6	0	0	0	0	0	0	13	0	0	13	19
12:15 AM	0	0	0	0	0	0	7	0	0	7	0	0	0	0	0	0	14	0	0	14	21
12:30 AM	0	0	0	0	0	0	8	0	0	8	0	0	0	0	0	0	14	0	0	14	22
12:45 AM	0	0	0	0	0	0	4	0	0	4	0	0	0	0	0	0	7	0	0	7	11
Hourly Total	0	0	0	0	0	0	25	0	0	25	0	0	0	0	0	0	48	0	0	48	73
1:00 AM	0	0	0	0	0	0	3	0	0	3	0	0	0	0	0	0	7	0	0	7	10
1:15 AM	0	0	0	0	0	0	4	0	0	4	0	0	0	0	0	0	10	0	0	10	14
1:30 AM	0	0	0	0	0	0	2	0	0	2	0	0	0	0	0	0	8	0	0	8	10
1:45 AM	0	0	0	0	0	0	2	0	0	2	0	0	0	0	0	0	0	0	0	0	2
Hourly Total	0	0	0	0	0	0	11	0	0	11	0	0	0	0	0	0	25	0	0	25	36
2:00 AM	0	0	0	0	0	0	2	0	0	2	0	0	0	0	0	0	9	0	0	9	11
2:15 AM	0	0	0	0	0	0	0	0	0	0	0	0	0	0	0	0	8	0	0	8	8
2:30 AM	0	0	0	0	0	0	3	1	0	4	0	0	0	0	0	1	2	0	0	3	7
2:45 AM	0	0	0	0	0	0	1	0	0	1	0	0	0	0	0	0	3	0	0	3	4
Hourly Total	0	0	0	0	0	0	6	1	0	7	0	0	0	0	0	1	22	0	0	23	30
3:00 AM	0	0	0	0	0	0	1	0	0	1	0	0	0	0	0	0	9	0	0	9	10
3:15 AM	0	0	0	0	0	0	1	0	0	1	0	0	0	0	0	0	6	0	0	6	7
3:30 AM	0	0	0	0	0	0	3	0	0	3	0	0	0	0	0	0	5	0	0	5	8
3:45 AM	0	0	0	0	0	0	1	0	0	1	0	0	0	0	0	0	8	0	0	8	9
Hourly Total	0	0	0	0	0	0	6	0	0	6	0	0	0	0	0	0	28	0	0	28	34
4:00 AM	0	0	0	0	0	0	0	0	0	0	0	0	0	0	0	0	21	0	0	21	21
4:15 AM	0	0	0	0	0	0	2	0	0	2	0	0	0	0	0	0	8	0	0	8	10
4:30 AM	0	0	0	0	0	0	2	0	0	2	1	0	0	0	1	0	2	0	0	2	5
4:45 AM	0	0	0	0	0	0	3	0	0	3	0	0	0	0	0	0	2	0	0	2	5
Hourly Total	0	0	0	0	0	0	7	0	0	7	1	0	0	0	1	0	33	0	0	33	41
5:00 AM	0	0	0	0	0	0	0	0	0	0	0	0	0	0	0	0	0	0	0	0	0
5:15 AM	0	0	0	0	0	0	7	0	0	7	0	0	0	0	0	0	3	0	0	3	10
5:30 AM	0	0	0	0	0	0	1	0	0	1	0	0	0	0	0	0	4	0	0	4	5
5:45 AM	0	0	0	0	0	0	5	0	0	5	0	0	0	0	0	0	5	0	0	5	10
Hourly Total	0	0	0	0	0	0	13	0	0	13	0	0	0	0	0	0	12	0	0	12	25
6:00 AM	0	0	0	0	0	0	6	0	0	6	0	0	0	0	0	0	6	0	0	6	12
6:15 AM	0	0	0	0	0	0	10	0	0	10	2	0	0	0	2	0	7	0	0	7	19
6:30 AM	0	0	0	0	0	0	12	0	0	12	2	0	0	0	2	0	9	0	0	9	23
6:45 AM	0	0	0	0	0	0	7	0	0	7	0	0	0	0	0	0	10	0	0	10	17
Hourly Total	0	0	0	0	0	0	35	0	0	35	4	0	0	0	4	0	32	0	0	32	71
7:00 AM	0	0	0	0	0	0	19	0	0	19	1	0	0	0	1	0	16	0	0	16	36
7:15 AM	0	0	0	0	0	0	22	1	0	23	1	0	0	0	1	0	20	0	0	20	44
7:30 AM	0	0	0	0	0	0	28	1	0	29	0	0	0	0	0	0	22	0	0	22	51

7:45 AM	0	0	0	0	0	0	42	0	0	42	0	0	0	0	0	0	12	0	0	12	54
Hourly Total	0	0	0	0	0	0	111	2	0	113	2	0	0	0	2	0	70	0	0	70	185
8:00 AM	0	0	0	0	0	0	38	0	0	38	1	0	0	0	1	0	26	0	0	26	65
8:15 AM	0	0	0	0	0	0	45	0	0	45	1	0	0	0	1	0	20	1	0	21	67
8:30 AM	0	0	0	0	0	0	28	0	0	28	0	0	0	0	0	0	27	0	0	27	55
8:45 AM	0	0	0	0	0	0	28	0	0	28	0	0	0	0	0	0	12	0	0	12	40
Hourly Total	0	0	0	0	0	0	139	0	0	139	2	0	0	0	2	0	85	1	0	86	227
9:00 AM	0	0	0	0	0	0	22	0	0	22	0	0	0	0	0	0	23	0	0	23	45
9:15 AM	0	0	0	0	0	0	23	1	0	24	0	0	0	0	0	0	17	0	0	17	41
9:30 AM	0	0	0	0	0	0	14	0	0	14	0	0	0	0	0	0	28	0	0	28	42
9:45 AM	0	0	0	0	0	0	38	0	0	38	0	1	0	1	2	0	29	0	0	29	69
Hourly Total	0	0	0	0	0	0	97	1	0	98	0	1	0	1	2	0	97	0	0	97	197
10:00 AM	0	0	0	0	0	0	25	0	0	25	0	0	0	0	0	0	28	0	0	28	53
10:15 AM	0	1	0	0	1	0	29	0	0	29	1	0	0	1	2	0	36	0	0	36	68
10:30 AM	0	0	1	0	1	1	24	0	0	25	0	0	0	0	0	0	26	1	0	27	53
10:45 AM	0	0	0	0	0	0	22	1	1	24	3	0	0	0	3	0	31	0	0	31	58
Hourly Total	0	1	1	0	2	1	100	1	1	103	4	0	0	1	5	0	121	1	0	122	232
11:00 AM	0	0	0	0	0	0	30	0	0	30	0	0	0	0	0	0	26	0	0	26	56
11:15 AM	0	0	0	0	0	0	21	0	0	21	0	0	0	0	0	0	16	0	0	16	37
11:30 AM	0	0	0	0	0	0	26	0	0	26	1	0	0	1	2	0	26	0	0	26	54
11:45 AM	0	0	0	0	0	0	21	1	0	22	2	0	0	0	2	0	17	0	0	17	41
Hourly Total	0	0	0	0	0	0	98	1	0	99	3	0	0	1	4	0	85	0	0	85	188
12:00 PM	0	0	0	0	0	0	29	1	0	30	0	0	0	0	0	0	16	0	0	16	46
12:15 PM	0	1	0	0	1	0	24	0	0	24	0	0	0	0	0	0	24	0	0	24	49
12:30 PM	0	0	0	0	0	0	37	1	0	38	0	0	0	0	0	0	27	0	0	27	65
12:45 PM	0	0	0	0	0	0	23	0	0	23	0	0	0	0	0	0	37	0	0	37	60
Hourly Total	0	1	0	0	1	0	113	2	0	115	0	0	0	0	0	0	104	0	0	104	220
1:00 PM	0	0	0	0	0	0	26	0	0	26	0	0	0	0	0	0	30	0	0	30	56
1:15 PM	0	0	0	0	0	0	26	0	0	26	0	0	0	0	0	0	23	0	0	23	49
1:30 PM	0	0	0	0	0	0	37	0	0	37	0	0	0	0	0	0	33	0	0	33	70
1:45 PM	0	0	0	0	0	0	30	1	0	31	0	0	0	0	0	0	34	0	0	34	65
Hourly Total	0	0	0	0	0	0	119	1	0	120	0	0	0	0	0	0	120	0	0	120	240
Grand Total	5	4	2	0	11	6	1856	29	1	1892	28	2	3	4	37	6	1913	4	0	1923	3863
Approach %	45.5	36.4	18.2	0.0	-	0.3	98.1	1.5	0.1	-	75.7	5.4	8.1	10.8	-	0.3	99.5	0.2	0.0	-	-
Total %	0.1	0.1	0.1	0.0	0.3	0.2	48.0	0.8	0.0	49.0	0.7	0.1	0.1	0.1	1.0	0.2	49.5	0.1	0.0	49.8	-
Lights	5	4	2	0	11	6	1795	28	1	1830	26	2	3	4	35	6	1859	3	0	1868	3744
% Lights	100.0	100.0	100.0	-	100.0	100.0	96.7	96.6	100.0	96.7	92.9	100.0	100.0	100.0	94.6	100.0	97.2	75.0	-	97.1	96.9
Other Vehicles	0	0	0	0	0	0	61	1	0	62	2	0	0	0	2	0	54	1	0	55	119
% Other Vehicles	0.0	0.0	0.0	-	0.0	0.0	3.3	3.4	0.0	3.3	7.1	0.0	0.0	0.0	5.4	0.0	2.8	25.0	-	2.9	3.1

Stantec Consulting Ltd.
300 - 1919 Rose St

Regina, Saskatchewan, Canada S4P 3P1
306 781 6400 erin.harms@stantec.com

Count Name: T14 (Chief Whitecap Trail & Range Rd 3055)
Site Code:
Start Date: 06-05-2023
Page No: 4

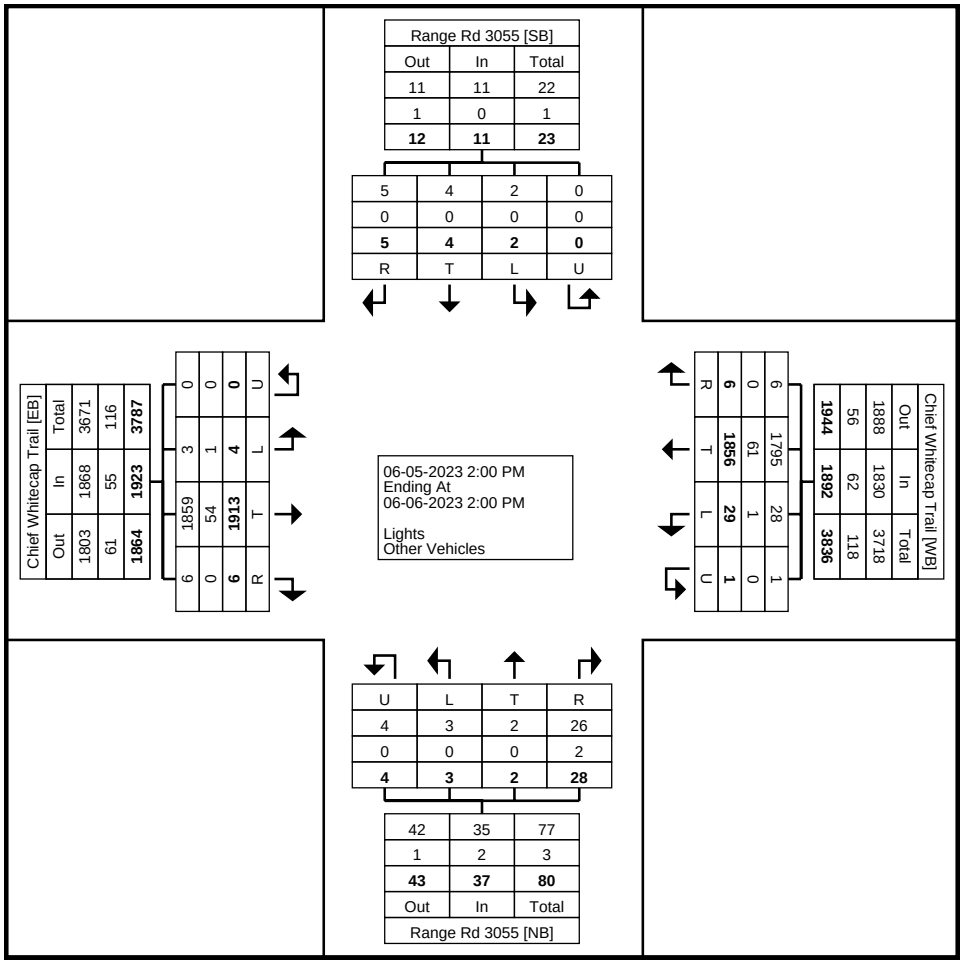

Turning Movement Data Plot

Stantec Consulting Ltd.
300 - 1919 Rose St

Regina, Saskatchewan, Canada S4P 3P1
306 781 6400 erin.harms@stantec.com

Count Name: T14 (Chief Whitecap Trail & Range Rd 3055)
Site Code:
Start Date: 06-05-2023

Turning Movement Peak Hour Data (4:15 PM)

Start Time	Range Rd 3055 Southbound					Chief Whitecap Trail Westbound					Range Rd 3055 Northbound					Chief Whitecap Trail Eastbound					
	Right	Thru	Left	U-Turn	App. Total	Right	Thru	Left	U-Turn	App. Total	Right	Thru	Left	U-Turn	App. Total	Right	Thru	Left	U-Turn	App. Total	Int. Total
4:15 PM	0	0	0	0	0	1	50	0	0	51	2	0	0	0	2	0	58	0	0	58	111
4:30 PM	0	0	0	0	0	0	36	1	0	37	2	0	0	0	2	0	35	0	0	35	74
4:45 PM	0	0	0	0	0	0	29	3	0	32	0	0	0	0	0	1	54	0	0	55	87
5:00 PM	1	0	0	0	1	0	33	0	0	33	0	0	0	0	0	0	49	0	0	49	83
Total	1	0	0	0	1	1	148	4	0	153	4	0	0	0	4	1	196	0	0	197	355
Approach %	100.0	0.0	0.0	0.0	-	0.7	96.7	2.6	0.0	-	100.0	0.0	0.0	0.0	-	0.5	99.5	0.0	0.0	-	-
Total %	0.3	0.0	0.0	0.0	0.3	0.3	41.7	1.1	0.0	43.1	1.1	0.0	0.0	0.0	1.1	0.3	55.2	0.0	0.0	55.5	-
PHF	0.250	0.000	0.000	0.000	0.250	0.250	0.740	0.333	0.000	0.750	0.500	0.000	0.000	0.000	0.500	0.250	0.845	0.000	0.000	0.849	0.800
Lights	1	0	0	0	1	1	145	4	0	150	4	0	0	0	4	1	192	0	0	193	348
% Lights	100.0	-	-	-	100.0	100.0	98.0	100.0	-	98.0	100.0	-	-	-	100.0	100.0	98.0	-	-	98.0	98.0
Other Vehicles	0	0	0	0	0	0	3	0	0	3	0	0	0	0	0	0	4	0	0	4	7
% Other Vehicles	0.0	-	-	-	0.0	0.0	2.0	0.0	-	2.0	0.0	-	-	-	0.0	0.0	2.0	-	-	2.0	2.0

Stantec Consulting Ltd.
300 - 1919 Rose St

Regina, Saskatchewan, Canada S4P 3P1
306 781 6400 erin.harms@stantec.com

Count Name: T14 (Chief Whitecap Trail & Range Rd 3055)
Site Code:
Start Date: 06-05-2023
Page No: 6

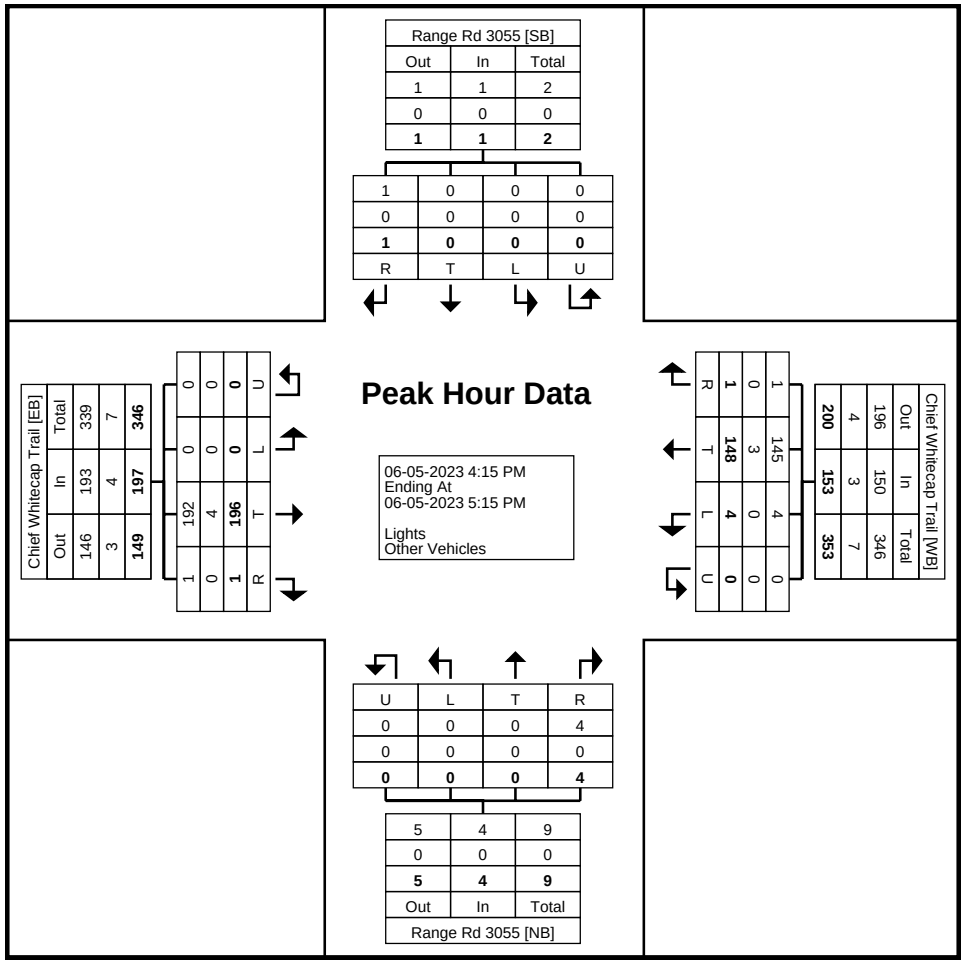

Turning Movement Peak Hour Data Plot (4:15 PM)

Stantec Consulting Ltd.
300 - 1919 Rose St

Regina, Saskatchewan, Canada S4P 3P1
306 781 6400 erin.harms@stantec.com

Count Name: T14 (Chief Whitecap Trail & Range Rd 3055)
Site Code:
Start Date: 06-05-2023

Turning Movement Peak Hour Data (9:45 AM)

Start Time	Range Rd 3055 Southbound					Chief Whitecap Trail Westbound					Range Rd 3055 Northbound					Chief Whitecap Trail Eastbound					
	Right	Thru	Left	U-Turn	App. Total	Right	Thru	Left	U-Turn	App. Total	Right	Thru	Left	U-Turn	App. Total	Right	Thru	Left	U-Turn	App. Total	Int. Total
9:45 AM	0	0	0	0	0	0	38	0	0	38	0	1	0	1	2	0	29	0	0	29	69
10:00 AM	0	0	0	0	0	0	25	0	0	25	0	0	0	0	0	0	28	0	0	28	53
10:15 AM	0	1	0	0	1	0	29	0	0	29	1	0	0	1	2	0	36	0	0	36	68
10:30 AM	0	0	1	0	1	1	24	0	0	25	0	0	0	0	0	0	26	1	0	27	53
Total	0	1	1	0	2	1	116	0	0	117	1	1	0	2	4	0	119	1	0	120	243
Approach %	0.0	50.0	50.0	0.0	-	0.9	99.1	0.0	0.0	-	25.0	25.0	0.0	50.0	-	0.0	99.2	0.8	0.0	-	-
Total %	0.0	0.4	0.4	0.0	0.8	0.4	47.7	0.0	0.0	48.1	0.4	0.4	0.0	0.8	1.6	0.0	49.0	0.4	0.0	49.4	-
PHF	0.000	0.250	0.250	0.000	0.500	0.250	0.763	0.000	0.000	0.770	0.250	0.250	0.000	0.500	0.500	0.000	0.826	0.250	0.000	0.833	0.880
Lights	0	1	1	0	2	1	113	0	0	114	1	1	0	2	4	0	113	1	0	114	234
% Lights	-	100.0	100.0	-	100.0	100.0	97.4	-	-	97.4	100.0	100.0	-	100.0	100.0	-	95.0	100.0	-	95.0	96.3
Other Vehicles	0	0	0	0	0	0	3	0	0	3	0	0	0	0	0	0	6	0	0	6	9
% Other Vehicles	-	0.0	0.0	-	0.0	0.0	2.6	-	-	2.6	0.0	0.0	-	0.0	0.0	-	5.0	0.0	-	5.0	3.7

Stantec Consulting Ltd.
300 - 1919 Rose St

Regina, Saskatchewan, Canada S4P 3P1
306 781 6400 erin.harms@stantec.com

Count Name: T14 (Chief Whitecap Trail & Range Rd 3055)
Site Code:
Start Date: 06-05-2023

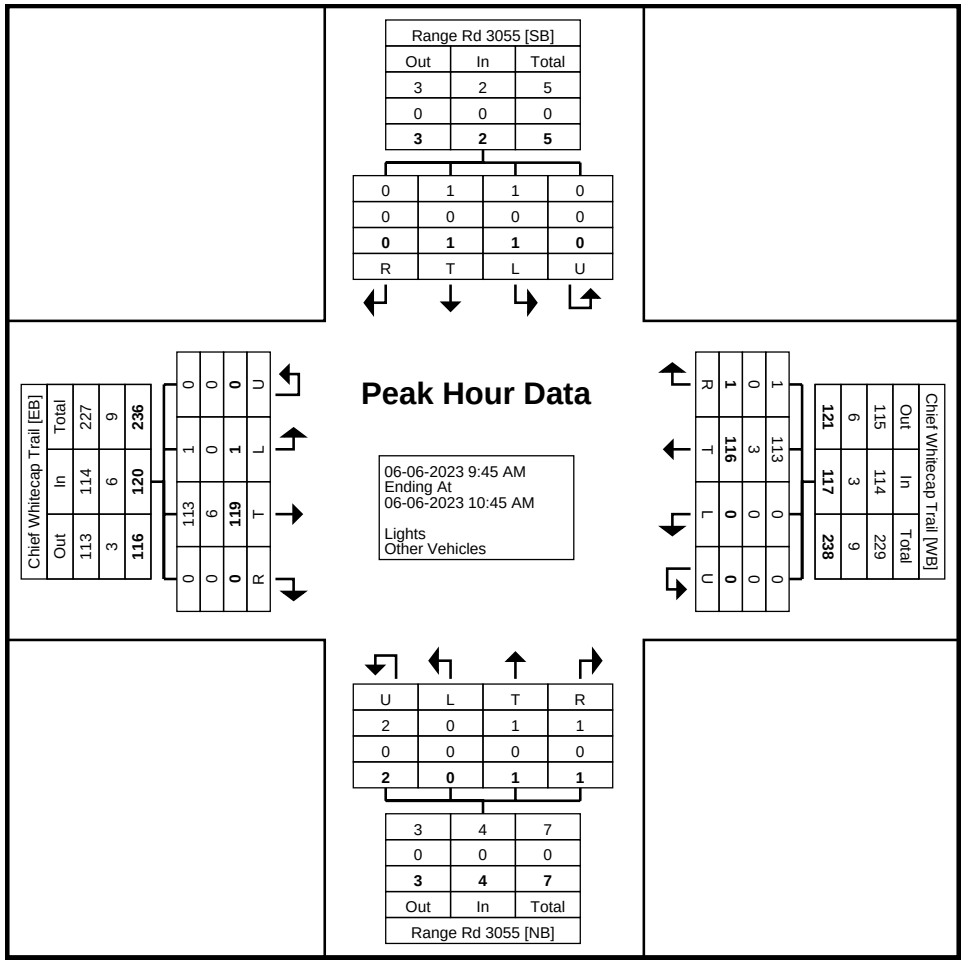

Turning Movement Peak Hour Data Plot (9:45 AM)

Stantec Consulting Ltd.
300 - 1919 Rose St

Regina, Saskatchewan, Canada S4P 3P1
306 781 6400 erin.harms@stantec.com

Count Name: T14 (Chief Whitecap Trail & Range Rd 3055)
Site Code:
Start Date: 06-05-2023

Turning Movement Peak Hour Data (1:00 PM)

Start Time	Range Rd 3055 Southbound					Chief Whitecap Trail Westbound					Range Rd 3055 Northbound					Chief Whitecap Trail Eastbound					
	Right	Thru	Left	U-Turn	App. Total	Right	Thru	Left	U-Turn	App. Total	Right	Thru	Left	U-Turn	App. Total	Right	Thru	Left	U-Turn	App. Total	Int. Total
1:00 PM	0	0	0	0	0	0	26	0	0	26	0	0	0	0	0	0	30	0	0	30	56
1:15 PM	0	0	0	0	0	0	26	0	0	26	0	0	0	0	0	0	23	0	0	23	49
1:30 PM	0	0	0	0	0	0	37	0	0	37	0	0	0	0	0	0	33	0	0	33	70
1:45 PM	0	0	0	0	0	0	30	1	0	31	0	0	0	0	0	0	34	0	0	34	65
Total	0	0	0	0	0	0	119	1	0	120	0	0	0	0	0	0	120	0	0	120	240
Approach %	0.0	0.0	0.0	0.0	-	0.0	99.2	0.8	0.0	-	0.0	0.0	0.0	0.0	-	0.0	100.0	0.0	0.0	-	-
Total %	0.0	0.0	0.0	0.0	0.0	0.0	49.6	0.4	0.0	50.0	0.0	0.0	0.0	0.0	0.0	0.0	50.0	0.0	0.0	50.0	-
PHF	0.000	0.000	0.000	0.000	0.000	0.000	0.804	0.250	0.000	0.811	0.000	0.000	0.000	0.000	0.000	0.000	0.882	0.000	0.000	0.882	0.857
Lights	0	0	0	0	0	0	112	1	0	113	0	0	0	0	0	0	114	0	0	114	227
% Lights	-	-	-	-	-	-	94.1	100.0	-	94.2	-	-	-	-	-	-	95.0	-	-	95.0	94.6
Other Vehicles	0	0	0	0	0	0	7	0	0	7	0	0	0	0	0	0	6	0	0	6	13
% Other Vehicles	-	-	-	-	-	-	5.9	0.0	-	5.8	-	-	-	-	-	-	5.0	-	-	5.0	5.4

Stantec Consulting Ltd.
300 - 1919 Rose St

Regina, Saskatchewan, Canada S4P 3P1
306 781 6400 erin.harms@stantec.com

Count Name: T14 (Chief Whitecap Trail & Range Rd 3055)
Site Code:
Start Date: 06-05-2023

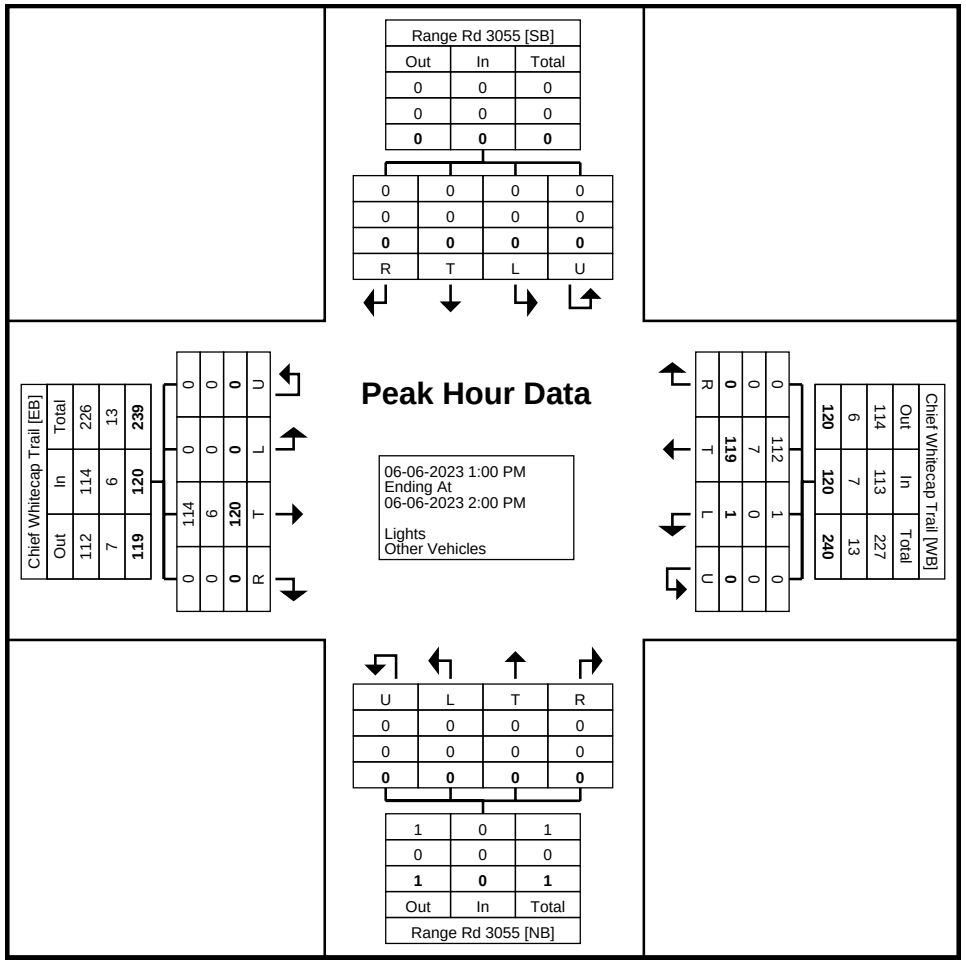

Turning Movement Peak Hour Data Plot (1:00 PM)

Stantec Consulting Ltd.
300 - 1919 Rose St

Regina, Saskatchewan, Canada S4P 3P1
306 781 6400 erin.harms@stantec.com

Count Name: T15 (Municipal Rd & Russell Rd)
Site Code:
Start Date: 05-24-2023

Turning Movement Data

Start Time	Russell Rd Southbound					Municipal Rd Westbound					Russell Rd Northbound					Municipal Rd Eastbound					
	Right	Thru	Left	U-Turn	App. Total	Right	Thru	Left	U-Turn	App. Total	Right	Thru	Left	U-Turn	App. Total	Right	Thru	Left	U-Turn	App. Total	Int. Total
12:15 PM	0	0	0	0	0	0	0	0	0	0	0	0	0	0	0	0	1	0	0	1	1
12:30 PM	0	0	0	0	0	0	0	0	0	0	0	0	0	0	0	0	0	0	0	0	0
12:45 PM	0	0	0	0	0	0	0	0	0	0	0	0	0	0	0	0	0	0	0	0	0
Hourly Total	0	0	0	0	0	0	0	0	0	0	0	0	0	0	0	0	1	0	0	1	1
1:00 PM	0	0	0	0	0	0	0	0	0	0	0	0	0	0	0	0	1	0	0	1	1
1:15 PM	0	0	0	0	0	0	0	0	0	0	0	0	0	0	0	0	0	0	0	0	0
1:30 PM	0	0	0	0	0	0	0	0	0	0	0	0	0	0	0	0	0	0	0	0	0
1:45 PM	0	0	0	0	0	0	0	0	0	0	0	0	0	0	0	0	0	0	0	0	0
Hourly Total	0	0	0	0	0	0	0	0	0	0	0	0	0	0	0	0	1	0	0	1	1
2:00 PM	0	0	0	0	0	0	0	1	0	1	1	0	0	0	1	0	1	0	0	1	3
2:15 PM	0	0	0	0	0	0	1	0	0	1	0	0	0	0	0	0	0	0	0	0	1
2:30 PM	0	0	0	0	0	0	0	0	0	0	0	0	0	0	0	0	1	0	0	1	1
2:45 PM	0	0	0	0	0	0	0	0	0	0	0	0	0	0	0	0	0	0	0	0	0
Hourly Total	0	0	0	0	0	0	1	1	0	2	1	0	0	0	1	0	2	0	0	2	5
3:00 PM	0	0	0	0	0	0	0	0	0	0	0	0	0	0	0	0	1	0	0	1	1
3:15 PM	0	0	0	0	0	0	0	0	0	0	0	0	0	0	0	0	0	0	0	0	0
3:30 PM	0	0	0	0	0	0	0	0	0	0	0	0	0	0	0	0	0	0	0	0	0
3:45 PM	0	0	0	0	0	0	2	0	0	2	0	0	0	0	0	0	0	0	0	0	2
Hourly Total	0	0	0	0	0	0	2	0	0	2	0	0	0	0	0	0	1	0	0	1	3
4:00 PM	0	0	0	0	0	0	1	0	0	1	0	0	0	0	0	0	1	0	0	1	2
4:15 PM	0	0	0	0	0	1	0	1	0	2	0	0	0	0	0	0	0	0	0	0	2
4:30 PM	0	0	0	0	0	0	1	0	0	1	0	0	0	0	0	0	0	0	0	0	1
4:45 PM	0	0	0	0	0	0	0	0	0	0	1	0	0	0	1	0	0	0	0	0	1
Hourly Total	0	0	0	0	0	1	2	1	0	4	1	0	0	0	1	0	1	0	0	1	6
5:00 PM	0	0	0	0	0	1	0	1	0	2	0	0	0	0	0	0	0	0	0	0	2
5:15 PM	0	0	0	0	0	0	0	1	0	1	0	0	0	0	0	0	1	0	0	1	2
5:30 PM	0	0	0	0	0	0	0	0	0	0	1	0	0	0	1	0	0	0	0	0	1
5:45 PM	0	0	1	0	1	0	0	0	0	0	0	0	0	0	0	0	0	0	0	0	1
Hourly Total	0	0	1	0	1	1	0	2	0	3	1	0	0	0	1	0	1	0	0	1	6
6:00 PM	0	0	1	0	1	0	0	0	0	0	0	0	0	0	0	0	0	0	0	0	1
6:15 PM	0	0	0	0	0	0	1	0	0	1	0	0	0	0	0	0	0	0	0	0	1
6:30 PM	0	0	0	0	0	0	0	0	0	0	0	0	0	0	0	0	0	0	0	0	0
6:45 PM	0	0	0	0	0	0	0	0	0	0	0	0	0	0	0	0	0	0	0	0	0
Hourly Total	0	0	1	0	1	0	1	0	0	1	0	0	0	0	0	0	0	0	0	0	2
7:00 PM	0	0	0	0	0	0	0	0	0	0	0	0	0	0	0	0	0	0	0	0	0
7:15 PM	0	0	0	0	0	0	0	0	0	0	0	0	0	0	0	0	0	0	0	0	0

7:30 PM	0	0	0	0	0	0	0	0	0	0	0	0	0	0	0	0	0	0	0	0	0
7:45 PM	0	0	0	0	0	0	0	0	0	0	0	0	0	0	0	0	0	0	0	0	0
Hourly Total	0	0	0	0	0	0	0	0	0	0	0	0	0	0	0	0	0	0	0	0	0
8:00 PM	0	0	0	0	0	0	0	0	0	0	0	0	0	0	0	0	0	0	0	0	0
8:15 PM	0	0	0	0	0	0	0	0	0	0	0	0	0	0	0	0	0	0	0	0	0
8:30 PM	0	0	0	0	0	0	0	0	0	0	0	0	0	0	0	0	0	0	0	0	0
8:45 PM	0	0	0	0	0	0	0	0	0	0	0	0	0	0	0	0	0	0	0	0	0
Hourly Total	0	0	0	0	0	0	0	0	0	0	0	0	0	0	0	0	0	0	0	0	0
9:00 PM	0	0	0	0	0	0	1	2	0	3	0	0	0	0	0	0	0	0	0	0	3
9:15 PM	0	0	0	0	0	0	0	0	0	0	0	0	0	0	0	0	0	0	0	0	0
9:30 PM	0	0	0	0	0	0	0	0	0	0	0	0	0	0	0	0	0	0	0	0	0
9:45 PM	0	0	0	0	0	0	0	0	0	0	0	0	0	0	0	0	0	0	0	0	0
Hourly Total	0	0	0	0	0	0	1	2	0	3	0	0	0	0	0	0	0	0	0	0	3
10:00 PM	0	0	0	0	0	0	0	0	0	0	0	0	0	0	0	0	0	0	0	0	0
10:15 PM	0	0	0	0	0	0	0	0	0	0	0	0	0	0	0	0	0	0	0	0	0
10:30 PM	0	0	0	0	0	0	0	0	0	0	0	0	0	0	0	0	0	0	0	0	0
10:45 PM	0	0	0	0	0	0	0	0	0	0	0	0	0	0	0	0	0	0	0	0	0
Hourly Total	0	0	0	0	0	0	0	0	0	0	0	0	0	0	0	0	0	0	0	0	0
11:00 PM	0	0	0	0	0	0	0	0	0	0	0	0	0	0	0	0	0	0	0	0	0
11:15 PM	0	0	0	0	0	0	0	0	0	0	0	0	0	0	0	0	0	0	0	0	0
11:30 PM	0	0	0	0	0	0	0	0	0	0	0	0	0	0	0	0	0	0	0	0	0
11:45 PM	0	0	0	0	0	0	0	0	0	0	0	0	0	0	0	0	0	0	0	0	0
Hourly Total	0	0	0	0	0	0	0	0	0	0	0	0	0	0	0	0	0	0	0	0	0
12:00 AM	0	0	0	0	0	0	0	0	0	0	0	0	0	0	0	0	0	0	0	0	0
12:15 AM	0	0	0	0	0	0	0	0	0	0	0	0	0	0	0	0	0	0	0	0	0
12:30 AM	0	0	0	0	0	0	0	0	0	0	0	0	0	0	0	0	0	0	0	0	0
12:45 AM	0	0	0	0	0	0	0	0	0	0	0	0	0	0	0	0	0	0	0	0	0
Hourly Total	0	0	0	0	0	0	0	0	0	0	0	0	0	0	0	0	0	0	0	0	0
1:00 AM	0	0	0	0	0	0	0	0	0	0	0	0	0	0	0	0	0	0	0	0	0
1:15 AM	0	0	0	0	0	0	0	0	0	0	0	0	0	0	0	0	0	0	0	0	0
1:30 AM	0	0	0	0	0	0	0	0	0	0	0	0	0	0	0	0	0	0	0	0	0
1:45 AM	0	0	0	0	0	0	0	0	0	0	0	0	0	0	0	0	0	0	0	0	0
Hourly Total	0	0	0	0	0	0	0	0	0	0	0	0	0	0	0	0	0	0	0	0	0
2:00 AM	0	0	0	0	0	0	0	0	0	0	0	0	0	0	0	0	0	0	0	0	0
2:15 AM	0	0	0	0	0	0	0	0	0	0	0	0	0	0	0	0	0	0	0	0	0
2:30 AM	0	0	0	0	0	0	0	0	0	0	0	0	0	0	0	0	0	0	0	0	0
2:45 AM	0	0	0	0	0	0	0	0	0	0	0	0	0	0	0	0	0	0	0	0	0
Hourly Total	0	0	0	0	0	0	0	0	0	0	0	0	0	0	0	0	0	0	0	0	0
3:00 AM	0	0	0	0	0	0	0	0	0	0	0	0	0	0	0	0	0	0	0	0	0
3:15 AM	0	0	0	0	0	0	0	0	0	0	0	0	0	0	0	0	0	0	0	0	0
3:30 AM	0	0	0	0	0	0	0	0	0	0	0	0	0	0	0	0	0	0	0	0	0
3:45 AM	0	0	0	0	0	0	0	0	0	0	0	0	0	0	0	0	0	0	0	0	0
Hourly Total	0	0	0	0	0	0	0	0	0	0	0	0	0	0	0	0	0	0	0	0	0
4:00 AM	0	0	0	0	0	0	0	0	0	0	0	0	0	0	0	0	0	0	0	0	0
4:15 AM	0	0	0	0	0	0	0	0	0	0	0	0	0	0	0	0	0	0	0	0	0
4:30 AM	0	0	0	0	0	0	0	0	0	0	0	0	0	0	0	0	0	0	0	0	0
4:45 AM	0	0	0	0	0	0	0	0	0	0	0	0	0	0	0	0	0	0	0	0	0
Hourly Total	0	0	0	0	0	0	0	0	0	0	0	0	0	0	0	0	0	0	0	0	0
5:00 AM	0	0	0	0	0	0	0	0	0	0	0	0	0	0	0	0	0	0	0	0	0
5:15 AM	0	0	0	0	0	0	0	0	0	0	0	0	0	0	0	0	0	0	0	0	0
5:30 AM	0	0	0	0	0	0	0	0	0	0	1	0	0	0	1	0	0	0	0	0	1
5:45 AM	0	0	0	0	0	0	0	0	0	0	0	0	0	0	0	0	0	0	0	0	0

Hourly Total	0	0	0	0	0	0	0	0	0	0	1	0	0	0	1	0	0	0	0	0	1
6:00 AM	0	0	0	0	0	0	0	0	0	0	0	0	0	0	0	0	0	0	0	0	0
6:15 AM	0	0	0	0	0	0	0	0	0	0	0	0	0	0	0	0	2	0	0	2	2
6:30 AM	0	0	0	0	0	0	0	0	0	0	0	0	0	0	0	0	0	0	0	0	0
6:45 AM	0	0	0	0	0	0	0	0	0	0	0	0	0	0	0	0	0	0	0	0	0
Hourly Total	0	0	0	0	0	0	0	0	0	0	0	0	0	0	0	0	2	0	0	2	2
7:00 AM	0	0	0	0	0	0	0	0	0	0	0	0	0	0	0	0	1	0	0	1	1
7:15 AM	0	0	0	0	0	0	0	0	0	0	0	0	0	0	0	0	0	0	0	0	0
7:30 AM	0	0	0	0	0	0	0	0	0	0	0	0	0	0	0	0	0	0	0	0	0
7:45 AM	0	0	0	0	0	0	0	0	0	0	0	0	0	0	0	0	0	0	0	0	0
Hourly Total	0	0	0	0	0	0	0	0	0	0	0	0	0	0	0	0	1	0	0	1	1
8:00 AM	0	0	0	0	0	0	2	0	0	2	0	0	0	0	0	0	1	0	0	1	3
8:15 AM	0	0	0	0	0	0	1	0	0	1	0	0	0	0	0	0	1	0	0	1	2
8:30 AM	0	0	0	0	0	0	0	0	0	0	0	0	0	0	0	0	1	0	0	1	1
8:45 AM	0	0	0	0	0	0	0	0	0	0	1	0	0	0	1	0	0	0	0	0	1
Hourly Total	0	0	0	0	0	0	3	0	0	3	1	0	0	0	1	0	3	0	0	3	7
9:00 AM	0	0	0	0	0	0	0	0	0	0	1	0	0	0	1	0	1	0	0	1	2
9:15 AM	0	0	0	0	0	0	0	0	0	0	1	0	0	0	1	0	0	0	0	0	1
9:30 AM	0	0	0	0	0	0	0	0	0	0	0	0	0	0	0	0	0	1	0	1	1
9:45 AM	1	0	0	0	1	0	0	0	0	0	0	0	0	0	0	0	0	0	0	0	1
Hourly Total	1	0	0	0	1	0	0	0	0	0	2	0	0	0	2	0	1	1	0	2	5
10:00 AM	0	0	0	0	0	0	0	0	0	0	1	0	0	0	1	0	0	0	0	0	1
10:15 AM	0	0	0	0	0	0	0	0	0	0	0	0	0	0	0	0	2	0	0	2	2
10:30 AM	0	0	0	0	0	0	0	0	0	0	0	0	0	0	0	0	0	0	0	0	0
10:45 AM	0	0	0	0	0	0	0	0	0	0	0	0	0	0	0	0	0	0	0	0	0
Hourly Total	0	0	0	0	0	0	0	0	0	0	1	0	0	0	1	0	2	0	0	2	3
11:00 AM	0	0	0	0	0	1	0	0	0	1	0	0	0	0	0	0	0	0	0	0	1
11:15 AM	0	0	0	0	0	0	1	0	0	1	0	0	0	0	0	0	0	0	0	0	1
11:30 AM	0	0	1	0	1	0	0	1	0	1	0	0	0	0	0	0	0	0	0	0	2
11:45 AM	0	0	0	0	0	0	0	0	0	0	0	0	0	0	0	0	0	0	0	0	0
Hourly Total	0	0	1	0	1	1	1	1	0	3	0	0	0	0	0	0	0	0	0	0	4
12:00 PM	0	0	0	0	0	0	0	0	0	0	0	0	0	0	0	0	0	0	0	0	0
Grand Total	1	0	3	0	4	3	11	7	0	21	8	0	0	0	8	0	16	1	0	17	50
Approach %	25.0	0.0	75.0	0.0	-	14.3	52.4	33.3	0.0	-	100.0	0.0	0.0	0.0	-	0.0	94.1	5.9	0.0	-	-
Total %	2.0	0.0	6.0	0.0	8.0	6.0	22.0	14.0	0.0	42.0	16.0	0.0	0.0	0.0	16.0	0.0	32.0	2.0	0.0	34.0	-
Lights	1	0	3	0	4	3	9	7	0	19	8	0	0	0	8	0	14	1	0	15	46
% Lights	100.0	-	100.0	-	100.0	100.0	81.8	100.0	-	90.5	100.0	-	-	-	100.0	-	87.5	100.0	-	88.2	92.0
Other Vehicles	0	0	0	0	0	0	2	0	0	2	0	0	0	0	0	0	2	0	0	2	4
% Other Vehicles	0.0	-	0.0	-	0.0	0.0	18.2	0.0	-	9.5	0.0	-	-	-	0.0	-	12.5	0.0	-	11.8	8.0

Stantec Consulting Ltd.
300 - 1919 Rose St

Regina, Saskatchewan, Canada S4P 3P1
306 781 6400 erin.harms@stantec.com

Count Name: T15 (Municipal Rd & Russell Rd)
Site Code:
Start Date: 05-24-2023

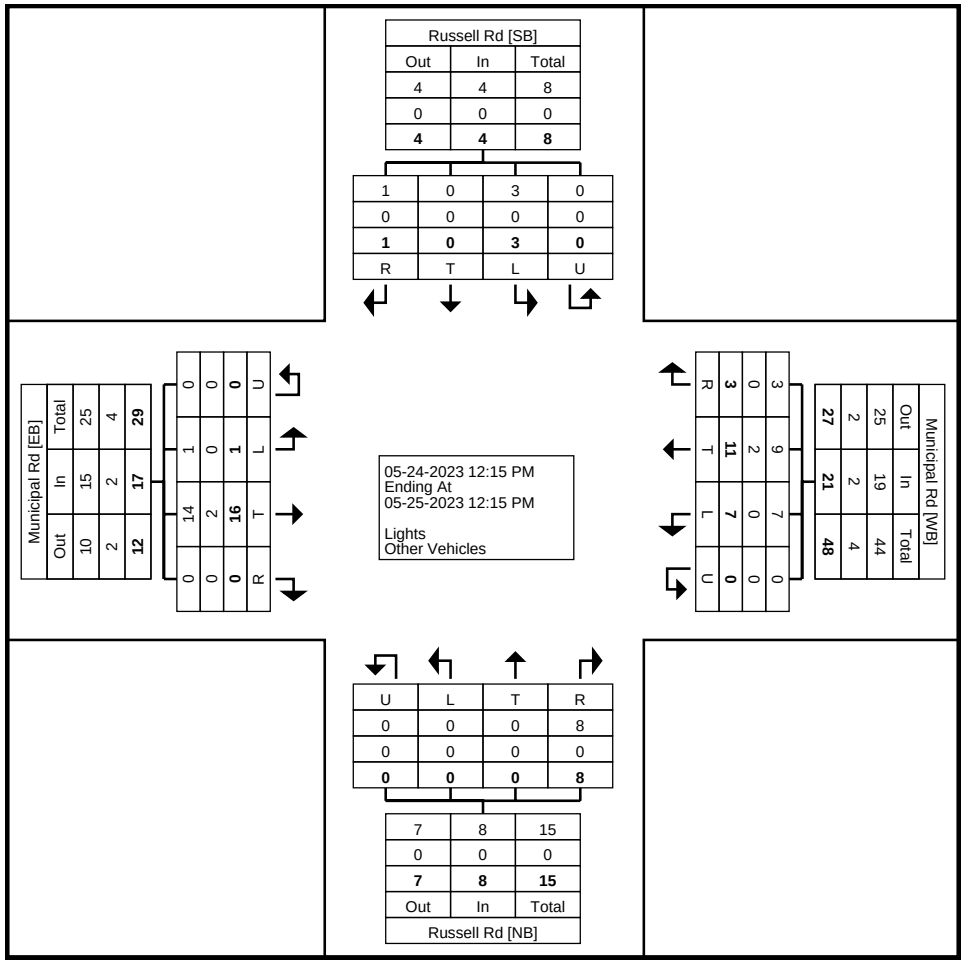

Turning Movement Data Plot

Stantec Consulting Ltd.
300 - 1919 Rose St

Regina, Saskatchewan, Canada S4P 3P1
306 781 6400 erin.harms@stantec.com

Count Name: T15 (Municipal Rd & Russell Rd)
Site Code:
Start Date: 05-24-2023

Turning Movement Peak Hour Data (3:45 PM)

Start Time	Russell Rd Southbound					Municipal Rd Westbound					Russell Rd Northbound					Municipal Rd Eastbound					
	Right	Thru	Left	U-Turn	App. Total	Right	Thru	Left	U-Turn	App. Total	Right	Thru	Left	U-Turn	App. Total	Right	Thru	Left	U-Turn	App. Total	Int. Total
3:45 PM	0	0	0	0	0	0	2	0	0	2	0	0	0	0	0	0	0	0	0	0	2
4:00 PM	0	0	0	0	0	0	1	0	0	1	0	0	0	0	0	0	1	0	0	1	2
4:15 PM	0	0	0	0	0	1	0	1	0	2	0	0	0	0	0	0	0	0	0	0	2
4:30 PM	0	0	0	0	0	0	1	0	0	1	0	0	0	0	0	0	0	0	0	0	1
Total	0	0	0	0	0	1	4	1	0	6	0	0	0	0	0	0	1	0	0	1	7
Approach %	0.0	0.0	0.0	0.0	-	16.7	66.7	16.7	0.0	-	0.0	0.0	0.0	0.0	-	0.0	100.0	0.0	0.0	-	-
Total %	0.0	0.0	0.0	0.0	0.0	14.3	57.1	14.3	0.0	85.7	0.0	0.0	0.0	0.0	0.0	0.0	14.3	0.0	0.0	14.3	-
PHF	0.000	0.000	0.000	0.000	0.000	0.250	0.500	0.250	0.000	0.750	0.000	0.000	0.000	0.000	0.000	0.000	0.250	0.000	0.000	0.250	0.875
Lights	0	0	0	0	0	1	3	1	0	5	0	0	0	0	0	0	0	0	0	0	5
% Lights	-	-	-	-	-	100.0	75.0	100.0	-	83.3	-	-	-	-	-	-	0.0	-	-	0.0	71.4
Other Vehicles	0	0	0	0	0	0	1	0	0	1	0	0	0	0	0	0	1	0	0	1	2
% Other Vehicles	-	-	-	-	-	0.0	25.0	0.0	-	16.7	-	-	-	-	-	-	100.0	-	-	100.0	28.6

Stantec Consulting Ltd.
300 - 1919 Rose St

Regina, Saskatchewan, Canada S4P 3P1
306 781 6400 erin.harms@stantec.com

Count Name: T15 (Municipal Rd & Russell Rd)
Site Code:
Start Date: 05-24-2023

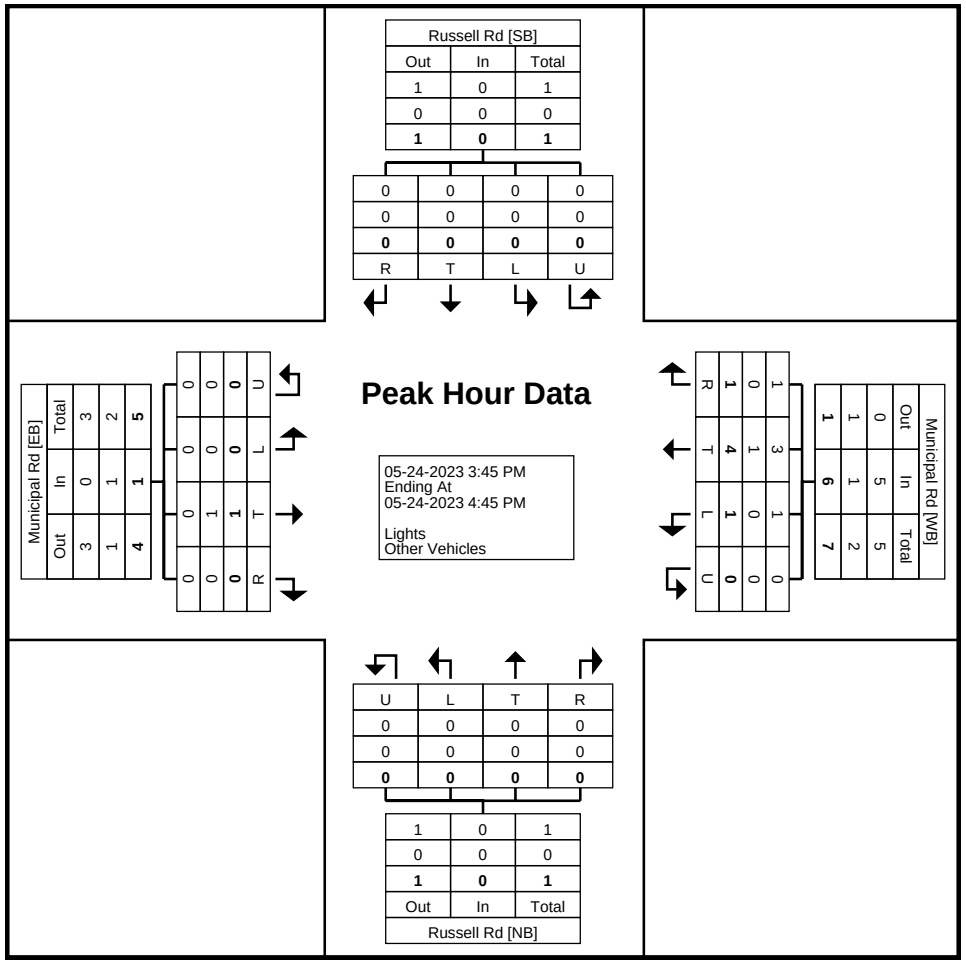

Turning Movement Peak Hour Data Plot (3:45 PM)

Stantec Consulting Ltd.
300 - 1919 Rose St

Regina, Saskatchewan, Canada S4P 3P1
306 781 6400 erin.harms@stantec.com

Count Name: T15 (Municipal Rd & Russell Rd)
Site Code:
Start Date: 05-24-2023

Turning Movement Peak Hour Data (8:00 AM)

Start Time	Russell Rd Southbound					Municipal Rd Westbound					Russell Rd Northbound					Municipal Rd Eastbound					
	Right	Thru	Left	U-Turn	App. Total	Right	Thru	Left	U-Turn	App. Total	Right	Thru	Left	U-Turn	App. Total	Right	Thru	Left	U-Turn	App. Total	Int. Total
8:00 AM	0	0	0	0	0	0	2	0	0	2	0	0	0	0	0	0	1	0	0	1	3
8:15 AM	0	0	0	0	0	0	1	0	0	1	0	0	0	0	0	0	1	0	0	1	2
8:30 AM	0	0	0	0	0	0	0	0	0	0	0	0	0	0	0	0	1	0	0	1	1
8:45 AM	0	0	0	0	0	0	0	0	0	0	1	0	0	0	1	0	0	0	0	0	1
Total	0	0	0	0	0	0	3	0	0	3	1	0	0	0	1	0	3	0	0	3	7
Approach %	0.0	0.0	0.0	0.0	-	0.0	100.0	0.0	0.0	-	100.0	0.0	0.0	0.0	-	0.0	100.0	0.0	0.0	-	-
Total %	0.0	0.0	0.0	0.0	0.0	0.0	42.9	0.0	0.0	42.9	14.3	0.0	0.0	0.0	14.3	0.0	42.9	0.0	0.0	42.9	-
PHF	0.000	0.000	0.000	0.000	0.000	0.000	0.375	0.000	0.000	0.375	0.250	0.000	0.000	0.000	0.250	0.000	0.750	0.000	0.000	0.750	0.583
Lights	0	0	0	0	0	0	2	0	0	2	1	0	0	0	1	0	2	0	0	2	5
% Lights	-	-	-	-	-	-	66.7	-	-	66.7	100.0	-	-	-	100.0	-	66.7	-	-	66.7	71.4
Other Vehicles	0	0	0	0	0	0	1	0	0	1	0	0	0	0	0	0	1	0	0	1	2
% Other Vehicles	-	-	-	-	-	-	33.3	-	-	33.3	0.0	-	-	-	0.0	-	33.3	-	-	33.3	28.6

Stantec Consulting Ltd.
300 - 1919 Rose St

Regina, Saskatchewan, Canada S4P 3P1
306 781 6400 erin.harms@stantec.com

Count Name: T15 (Municipal Rd & Russell Rd)
Site Code:
Start Date: 05-24-2023

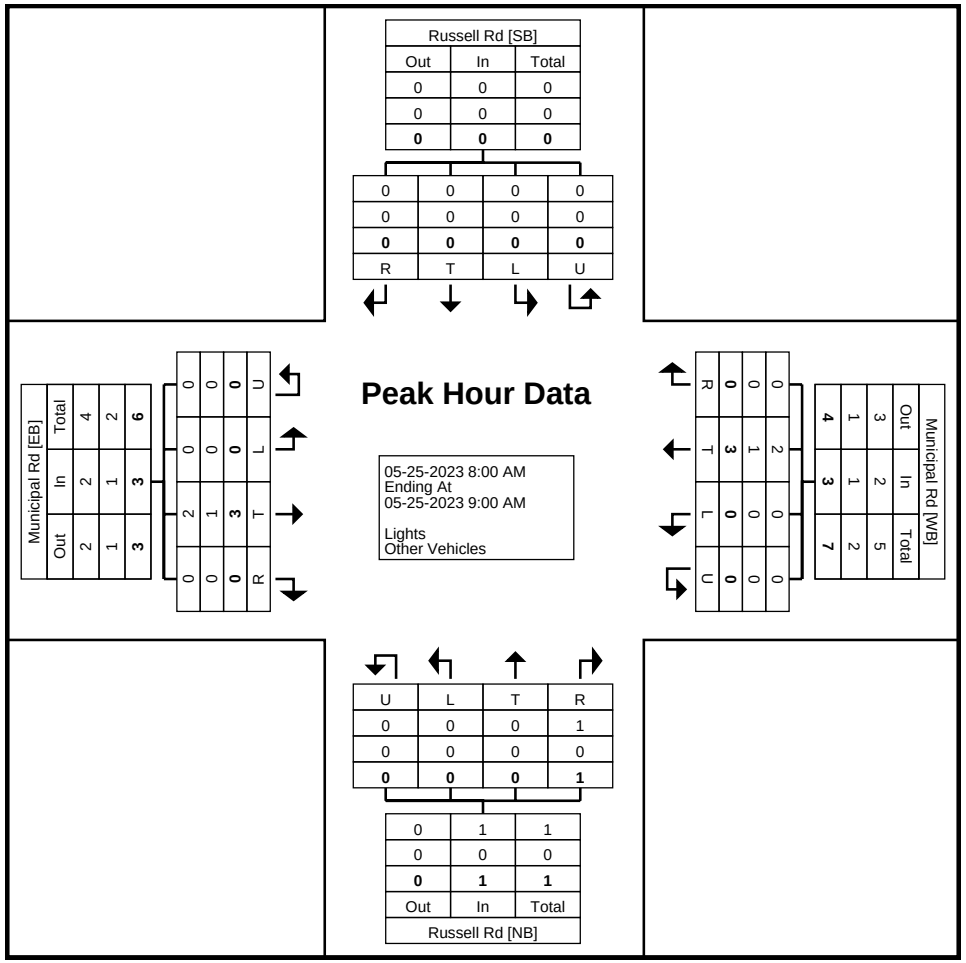

Turning Movement Peak Hour Data Plot (8:00 AM)

Stantec Consulting Ltd.
300 - 1919 Rose St

Regina, Saskatchewan, Canada S4P 3P1
306 781 6400 erin.harms@stantec.com

Count Name: T16 (Township Rd 354 & Range Rd 3052)
Site Code:
Start Date: 05-19-2023

Turning Movement Data

Start Time	Township Rd 354 Southbound					Range Rd 3052 Westbound					Township Rd 354 Northbound					Range Rd 3052 Eastbound					
	Right	Thru	Left	U-Turn	App. Total	Right	Thru	Left	U-Turn	App. Total	Right	Thru	Left	U-Turn	App. Total	Right	Thru	Left	U-Turn	App. Total	Int. Total
5:00 PM	1	0	0	0	1	0	7	2	0	9	3	0	2	0	5	2	9	2	0	13	28
5:15 PM	0	0	0	0	0	0	6	1	0	7	1	0	0	0	1	1	13	0	0	14	22
5:30 PM	0	1	0	0	1	0	3	0	0	3	0	0	0	0	0	0	10	1	0	11	15
5:45 PM	0	1	0	0	1	1	10	1	0	12	0	0	1	0	1	0	7	1	0	8	22
Hourly Total	1	2	0	0	3	1	26	4	0	31	4	0	3	0	7	3	39	4	0	46	87
6:00 PM	1	0	2	0	3	0	11	0	0	11	0	2	0	0	2	4	18	0	0	22	38
6:15 PM	0	0	1	0	1	0	3	1	0	4	0	0	0	0	0	2	10	0	0	12	17
6:30 PM	0	0	0	0	0	0	4	2	0	6	2	0	0	0	2	2	13	0	0	15	23
6:45 PM	1	0	0	0	1	0	3	0	0	3	0	0	0	0	0	4	7	0	0	11	15
Hourly Total	2	0	3	0	5	0	21	3	0	24	2	2	0	0	4	12	48	0	0	60	93
7:00 PM	1	0	1	0	2	2	5	0	0	7	1	0	1	0	2	0	5	0	0	5	16
7:15 PM	0	0	0	0	0	0	3	0	0	3	0	0	0	0	0	0	9	0	0	9	12
7:30 PM	0	0	0	0	0	0	3	0	0	3	0	0	0	0	0	0	1	0	0	1	4
7:45 PM	0	0	0	0	0	0	7	0	0	7	1	0	0	0	1	0	6	0	0	6	14
Hourly Total	1	0	1	0	2	2	18	0	0	20	2	0	1	0	3	0	21	0	0	21	46
8:00 PM	1	0	0	0	1	0	3	1	0	4	0	0	0	0	0	0	4	1	0	5	10
8:15 PM	0	0	0	0	0	0	2	0	1	3	0	0	1	0	1	1	3	0	0	4	8
8:30 PM	0	0	0	0	0	0	6	0	0	6	0	0	0	0	0	0	3	0	0	3	9
8:45 PM	0	0	1	0	1	0	1	0	0	1	0	0	0	0	0	0	4	0	0	4	6
Hourly Total	1	0	1	0	2	0	12	1	1	14	0	0	1	0	1	1	14	1	0	16	33
9:00 PM	0	0	0	0	0	0	5	0	0	5	0	0	2	0	2	0	1	0	0	1	8
9:15 PM	0	0	0	0	0	0	2	0	0	2	0	0	0	0	0	1	3	0	0	4	6
9:30 PM	0	0	0	0	0	0	5	0	0	5	0	0	1	0	1	0	1	0	0	1	7
9:45 PM	0	0	0	0	0	0	0	0	0	0	0	0	0	0	0	2	3	0	0	5	5
Hourly Total	0	0	0	0	0	0	12	0	0	12	0	0	3	0	3	3	8	0	0	11	26
10:00 PM	0	0	0	0	0	0	1	0	0	1	0	0	0	0	0	0	3	1	0	4	5
10:15 PM	0	0	0	0	0	0	0	1	1	2	0	0	0	0	0	1	1	0	0	2	4
10:30 PM	0	0	0	0	0	0	1	0	0	1	0	0	0	0	0	0	0	0	0	0	1
10:45 PM	0	0	0	0	0	0	1	0	0	1	1	0	0	0	1	0	1	0	0	1	3
Hourly Total	0	0	0	0	0	0	3	1	1	5	1	0	0	0	1	1	5	1	0	7	13
11:00 PM	0	0	0	0	0	0	2	0	0	2	0	0	0	0	0	0	2	0	0	2	4
11:15 PM	0	0	0	0	0	0	1	0	0	1	0	0	0	0	0	0	1	0	0	1	2
11:30 PM	0	0	0	0	0	0	0	0	0	0	0	0	0	0	0	0	1	0	0	1	1
11:45 PM	0	0	0	0	0	0	0	0	0	0	0	0	0	0	0	0	1	0	0	1	1
Hourly Total	0	0	0	0	0	0	3	0	0	3	0	0	0	0	0	0	5	0	0	5	8
12:00 AM	0	0	0	0	0	0	0	0	0	0	0	0	0	0	0	0	1	0	0	1	1

12:15 AM	1	0	0	0	1	0	0	0	0	0	0	0	0	0	0	0	1	0	0	1	2
12:30 AM	0	0	0	0	0	0	0	0	0	0	0	0	0	0	0	0	1	0	0	1	1
12:45 AM	0	0	0	0	0	0	0	0	0	0	0	0	0	0	0	0	0	0	0	0	0
Hourly Total	1	0	0	0	1	0	0	0	0	0	0	0	0	0	0	0	3	0	0	3	4
1:00 AM	0	0	0	0	0	0	0	0	0	0	0	0	0	0	0	0	0	0	0	0	0
1:15 AM	0	0	0	0	0	0	1	0	0	1	0	0	0	0	0	0	0	0	0	0	1
1:30 AM	0	0	0	0	0	0	0	0	0	0	0	0	0	0	0	0	0	0	0	0	0
1:45 AM	0	0	0	0	0	0	0	0	0	0	0	0	0	0	0	0	0	0	0	0	0
Hourly Total	0	0	0	0	0	0	1	0	0	1	0	0	0	0	0	0	0	0	0	0	1
2:00 AM	0	0	0	0	0	0	0	0	0	0	0	0	0	0	0	0	0	0	0	0	0
2:15 AM	0	0	0	0	0	0	0	0	0	0	0	0	0	0	0	0	0	0	0	0	0
2:30 AM	0	0	0	0	0	0	0	0	0	0	0	0	0	0	0	0	1	0	0	1	1
2:45 AM	0	0	0	0	0	0	0	0	0	0	0	0	0	0	0	0	0	0	0	0	0
Hourly Total	0	0	0	0	0	0	0	0	0	0	0	0	0	0	0	0	1	0	0	1	1
3:00 AM	0	0	0	0	0	0	0	0	0	0	1	0	0	0	1	0	0	0	0	0	1
3:15 AM	0	0	0	0	0	0	0	0	0	0	0	0	0	0	0	0	1	0	0	1	1
3:30 AM	0	0	0	0	0	0	1	0	0	1	0	0	0	0	0	0	1	0	0	1	2
3:45 AM	0	0	0	0	0	0	0	0	0	0	0	0	0	0	0	0	0	0	0	0	0
Hourly Total	0	0	0	0	0	0	1	0	0	1	1	0	0	0	1	0	2	0	0	2	4
4:00 AM	0	0	0	0	0	0	0	0	0	0	0	0	0	0	0	0	0	0	0	0	0
4:15 AM	0	0	0	0	0	0	0	0	0	0	0	0	0	0	0	0	0	0	0	0	0
4:30 AM	0	0	0	0	0	0	0	0	0	0	0	0	0	0	0	0	0	0	0	0	0
4:45 AM	0	0	0	0	0	0	1	0	0	1	0	0	0	0	0	0	1	0	0	1	2
Hourly Total	0	0	0	0	0	0	1	0	0	1	0	0	0	0	0	0	1	0	0	1	2
5:00 AM	0	0	0	0	0	0	0	0	0	0	0	0	0	0	0	0	0	0	0	0	0
5:15 AM	0	0	0	0	0	0	0	0	0	0	0	0	1	0	1	0	0	0	0	0	1
5:30 AM	0	0	0	0	0	0	1	0	0	1	0	0	0	0	0	0	0	0	0	0	1
5:45 AM	0	0	0	0	0	0	0	0	0	0	0	0	0	0	0	0	0	0	0	0	0
Hourly Total	0	0	0	0	0	0	1	0	0	1	0	0	1	0	1	0	0	0	0	0	2
6:00 AM	0	0	0	0	0	0	0	0	0	0	0	0	0	0	0	0	0	0	0	0	0
6:15 AM	0	0	0	0	0	0	1	0	0	1	0	0	0	0	0	0	0	0	0	0	1
6:30 AM	0	0	0	0	0	0	1	0	0	1	0	0	0	0	0	0	0	0	0	0	1
6:45 AM	0	0	0	0	0	0	0	0	0	0	0	0	0	0	0	0	1	0	0	1	1
Hourly Total	0	0	0	0	0	0	2	0	0	2	0	0	0	0	0	0	1	0	0	1	3
7:00 AM	0	0	0	0	0	0	0	0	0	0	0	0	2	0	2	0	1	0	0	1	3
7:15 AM	0	0	0	0	0	0	2	0	0	2	1	0	0	0	1	0	2	0	0	2	5
7:30 AM	0	0	0	0	0	0	3	0	0	3	0	0	0	0	0	1	0	0	0	1	4
7:45 AM	0	1	0	0	1	0	0	0	0	0	1	0	1	0	2	0	3	0	0	3	6
Hourly Total	0	1	0	0	1	0	5	0	0	5	2	0	3	0	5	1	6	0	0	7	18
8:00 AM	0	0	0	0	0	0	2	0	0	2	0	0	0	0	0	0	3	0	0	3	5
8:15 AM	0	0	0	0	0	1	1	1	0	3	1	0	0	0	1	1	4	0	0	5	9
8:30 AM	0	0	1	0	1	0	2	0	0	2	1	1	0	0	2	0	0	0	0	0	5
8:45 AM	0	0	1	0	1	0	9	0	0	9	0	0	1	0	1	1	2	0	0	3	14
Hourly Total	0	0	2	0	2	1	14	1	0	16	2	1	1	0	4	2	9	0	0	11	33
9:00 AM	0	1	1	0	2	0	3	0	0	3	1	0	0	0	1	1	1	0	0	2	8
9:15 AM	0	0	0	0	0	0	5	0	0	5	1	0	1	0	2	0	4	0	0	4	11
9:30 AM	0	1	0	0	1	0	6	0	0	6	0	0	1	0	1	1	0	0	0	1	9
9:45 AM	0	0	0	0	0	0	6	1	0	7	0	1	0	0	1	0	1	0	0	1	9
Hourly Total	0	2	1	0	3	0	20	1	0	21	2	1	2	0	5	2	6	0	0	8	37
10:00 AM	0	1	0	0	1	0	3	0	0	3	0	0	0	0	0	1	1	0	0	2	6
10:15 AM	0	1	0	0	1	1	5	1	0	7	0	0	1	0	1	0	7	0	0	7	16
10:30 AM	0	0	0	0	0	0	7	0	0	7	0	0	2	0	2	0	4	0	0	4	13

10:45 AM	0	0	0	0	0	0	11	0	0	11	1	0	1	0	2	0	4	0	0	4	17
Hourly Total	0	2	0	0	2	1	26	1	0	28	1	0	4	0	5	1	16	0	0	17	52
11:00 AM	0	0	2	0	2	0	9	0	0	9	0	0	1	0	1	0	10	0	0	10	22
11:15 AM	0	0	0	0	0	1	6	0	0	7	0	0	0	0	0	1	3	0	0	4	11
11:30 AM	0	0	0	0	0	1	5	0	0	6	0	0	0	0	0	0	7	0	0	7	13
11:45 AM	0	0	0	0	0	0	2	1	0	3	1	0	0	0	1	0	3	0	0	3	7
Hourly Total	0	0	2	0	2	2	22	1	0	25	1	0	1	0	2	1	23	0	0	24	53
12:00 PM	1	0	0	0	1	0	8	0	0	8	0	1	0	0	1	0	8	0	0	8	18
12:15 PM	0	0	0	0	0	1	4	1	0	6	1	0	0	0	1	1	5	0	0	6	13
12:30 PM	0	1	0	0	1	0	3	0	0	3	0	0	1	0	1	0	6	0	0	6	11
12:45 PM	0	1	0	0	1	1	7	0	0	8	0	0	1	0	1	1	5	0	0	6	16
Hourly Total	1	2	0	0	3	2	22	1	0	25	1	1	2	0	4	2	24	0	0	26	58
1:00 PM	0	0	0	0	0	0	7	0	0	7	1	1	0	0	2	1	6	0	0	7	16
1:15 PM	1	0	0	0	1	1	11	0	0	12	0	0	1	0	1	1	4	0	0	5	19
1:30 PM	1	1	0	0	2	0	2	0	0	2	2	0	0	0	2	1	6	0	0	7	13
1:45 PM	0	0	0	0	0	0	3	0	0	3	0	0	0	0	0	1	3	0	0	4	7
Hourly Total	2	1	0	0	3	1	23	0	0	24	3	1	1	0	5	4	19	0	0	23	55
2:00 PM	0	0	0	0	0	0	8	0	0	8	0	0	0	0	0	1	4	0	0	5	13
2:15 PM	0	0	0	0	0	0	5	0	0	5	0	0	0	0	0	0	4	0	0	4	9
2:30 PM	0	0	0	0	0	0	8	1	0	9	0	0	0	0	0	1	4	0	0	5	14
2:45 PM	1	0	0	0	1	0	7	1	0	8	0	1	0	0	1	0	7	0	0	7	17
Hourly Total	1	0	0	0	1	0	28	2	0	30	0	1	0	0	1	2	19	0	0	21	53
3:00 PM	1	1	0	0	2	0	3	0	0	3	0	0	0	0	0	0	4	1	0	5	10
3:15 PM	0	0	0	0	0	0	10	0	0	10	1	0	2	0	3	0	3	1	0	4	17
3:30 PM	0	0	0	0	0	0	3	0	0	3	0	0	0	0	0	0	2	0	0	2	5
3:45 PM	1	0	0	0	1	0	3	0	0	3	1	0	0	0	1	1	10	1	0	12	17
Hourly Total	2	1	0	0	3	0	19	0	0	19	2	0	2	0	4	1	19	3	0	23	49
4:00 PM	0	1	0	0	1	0	5	0	0	5	0	0	0	0	0	0	6	0	0	6	12
4:15 PM	0	0	0	0	0	0	3	0	0	3	1	1	0	0	2	0	4	0	0	4	9
4:30 PM	0	0	0	0	0	0	7	0	0	7	0	0	0	0	0	1	4	0	0	5	12
4:45 PM	0	0	0	0	0	0	1	0	0	1	0	0	0	0	0	1	13	0	0	14	15
Hourly Total	0	1	0	0	1	0	16	0	0	16	1	1	0	0	2	2	27	0	0	29	48
Grand Total	12	12	10	0	34	10	296	16	2	324	25	8	25	0	58	38	316	9	0	363	779
Approach %	35.3	35.3	29.4	0.0	-	3.1	91.4	4.9	0.6	-	43.1	13.8	43.1	0.0	-	10.5	87.1	2.5	0.0	-	-
Total %	1.5	1.5	1.3	0.0	4.4	1.3	38.0	2.1	0.3	41.6	3.2	1.0	3.2	0.0	7.4	4.9	40.6	1.2	0.0	46.6	-
Lights	12	10	10	0	32	10	294	16	2	322	24	6	24	0	54	37	313	9	0	359	767
% Lights	100.0	83.3	100.0	-	94.1	100.0	99.3	100.0	100.0	99.4	96.0	75.0	96.0	-	93.1	97.4	99.1	100.0	-	98.9	98.5
Other Vehicles	0	2	0	0	2	0	2	0	0	2	1	2	1	0	4	1	3	0	0	4	12
% Other Vehicles	0.0	16.7	0.0	-	5.9	0.0	0.7	0.0	0.0	0.6	4.0	25.0	4.0	-	6.9	2.6	0.9	0.0	-	1.1	1.5

Stantec Consulting Ltd.
300 - 1919 Rose St

Regina, Saskatchewan, Canada S4P 3P1
306 781 6400 erin.harms@stantec.com

Count Name: T16 (Township Rd 354 & Range Rd 3052)
Site Code:
Start Date: 05-19-2023
Page No: 4

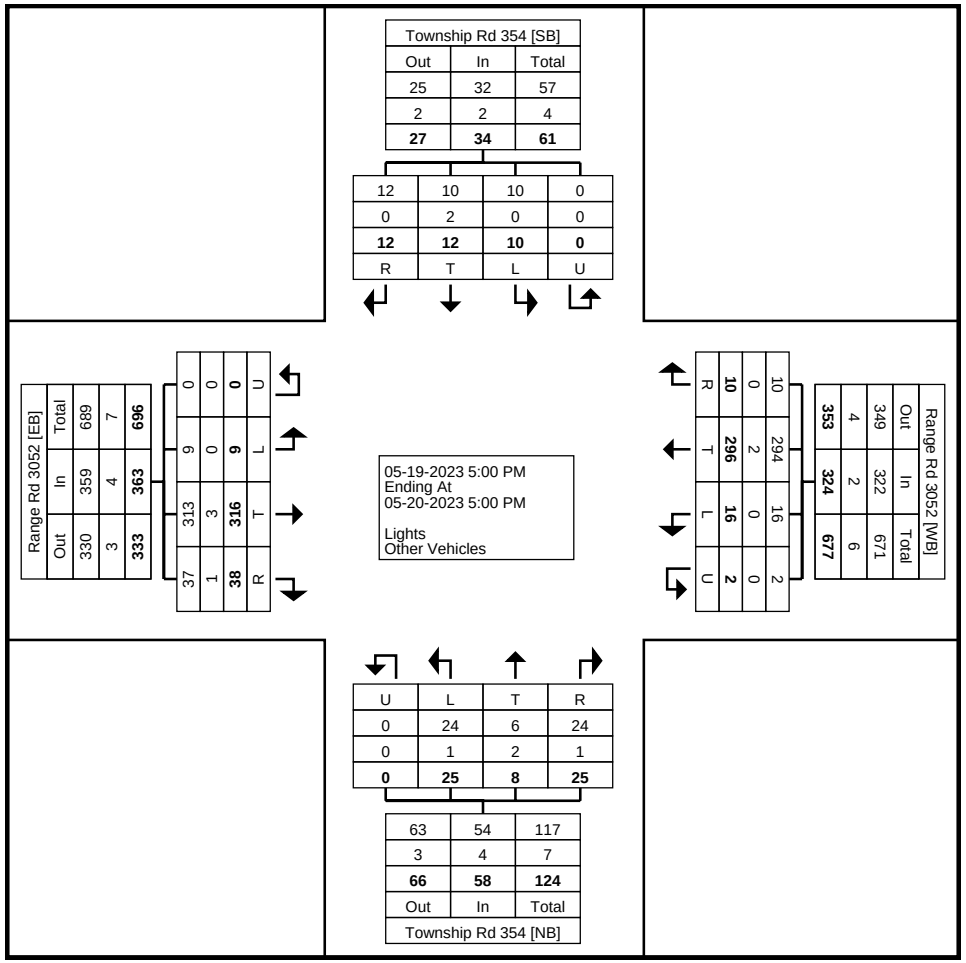

Turning Movement Data Plot

Stantec Consulting Ltd.
300 - 1919 Rose St

Regina, Saskatchewan, Canada S4P 3P1
306 781 6400 erin.harms@stantec.com

Count Name: T16 (Township Rd 354 & Range Rd 3052)
Site Code:
Start Date: 05-19-2023

Turning Movement Peak Hour Data (5:45 PM)

Start Time	Township Rd 354 Southbound					Range Rd 3052 Westbound					Township Rd 354 Northbound					Range Rd 3052 Eastbound					
	Right	Thru	Left	U-Turn	App. Total	Right	Thru	Left	U-Turn	App. Total	Right	Thru	Left	U-Turn	App. Total	Right	Thru	Left	U-Turn	App. Total	Int. Total
5:45 PM	0	1	0	0	1	1	10	1	0	12	0	0	1	0	1	0	7	1	0	8	22
6:00 PM	1	0	2	0	3	0	11	0	0	11	0	2	0	0	2	4	18	0	0	22	38
6:15 PM	0	0	1	0	1	0	3	1	0	4	0	0	0	0	0	2	10	0	0	12	17
6:30 PM	0	0	0	0	0	0	4	2	0	6	2	0	0	0	2	2	13	0	0	15	23
Total	1	1	3	0	5	1	28	4	0	33	2	2	1	0	5	8	48	1	0	57	100
Approach %	20.0	20.0	60.0	0.0	-	3.0	84.8	12.1	0.0	-	40.0	40.0	20.0	0.0	-	14.0	84.2	1.8	0.0	-	-
Total %	1.0	1.0	3.0	0.0	5.0	1.0	28.0	4.0	0.0	33.0	2.0	2.0	1.0	0.0	5.0	8.0	48.0	1.0	0.0	57.0	-
PHF	0.250	0.250	0.375	0.000	0.417	0.250	0.636	0.500	0.000	0.688	0.250	0.250	0.250	0.000	0.625	0.500	0.667	0.250	0.000	0.648	0.658
Lights	1	1	3	0	5	1	28	4	0	33	2	2	1	0	5	8	48	1	0	57	100
% Lights	100.0	100.0	100.0	-	100.0	100.0	100.0	100.0	-	100.0	100.0	100.0	100.0	-	100.0	100.0	100.0	100.0	-	100.0	100.0
Other Vehicles	0	0	0	0	0	0	0	0	0	0	0	0	0	0	0	0	0	0	0	0	0
% Other Vehicles	0.0	0.0	0.0	-	0.0	0.0	0.0	0.0	-	0.0	0.0	0.0	0.0	-	0.0	0.0	0.0	0.0	-	0.0	0.0

Stantec Consulting Ltd.
300 - 1919 Rose St

Regina, Saskatchewan, Canada S4P 3P1
306 781 6400 erin.harms@stantec.com

Count Name: T16 (Township Rd 354 & Range Rd 3052)
Site Code:
Start Date: 05-19-2023
Page No: 6

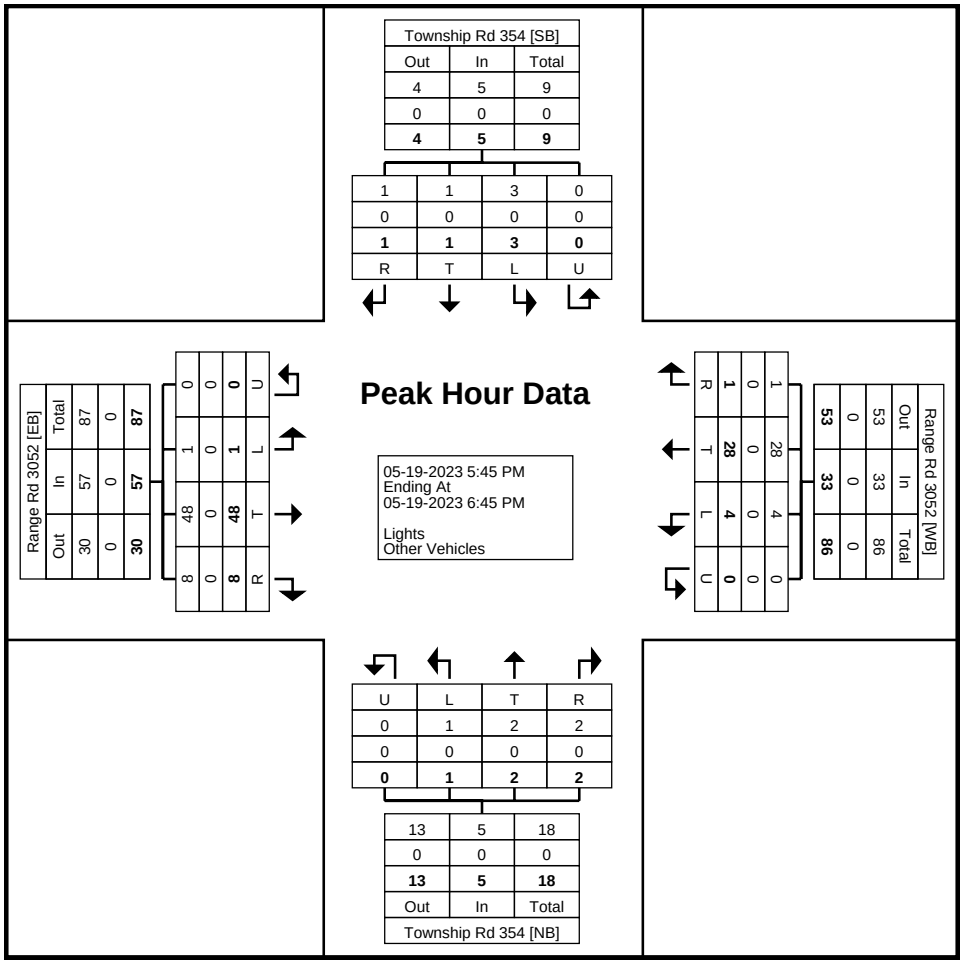

Turning Movement Peak Hour Data Plot (5:45 PM)

Stantec Consulting Ltd.
300 - 1919 Rose St

Regina, Saskatchewan, Canada S4P 3P1
306 781 6400 erin.harms@stantec.com

Count Name: T16 (Township Rd 354 & Range Rd 3052)
Site Code:
Start Date: 05-19-2023

Turning Movement Peak Hour Data (10:15 AM)

Start Time	Township Rd 354 Southbound					Range Rd 3052 Westbound					Township Rd 354 Northbound					Range Rd 3052 Eastbound					
	Right	Thru	Left	U-Turn	App. Total	Right	Thru	Left	U-Turn	App. Total	Right	Thru	Left	U-Turn	App. Total	Right	Thru	Left	U-Turn	App. Total	Int. Total
10:15 AM	0	1	0	0	1	1	5	1	0	7	0	0	1	0	1	0	7	0	0	7	16
10:30 AM	0	0	0	0	0	0	7	0	0	7	0	0	2	0	2	0	4	0	0	4	13
10:45 AM	0	0	0	0	0	0	11	0	0	11	1	0	1	0	2	0	4	0	0	4	17
11:00 AM	0	0	2	0	2	0	9	0	0	9	0	0	1	0	1	0	10	0	0	10	22
Total	0	1	2	0	3	1	32	1	0	34	1	0	5	0	6	0	25	0	0	25	68
Approach %	0.0	33.3	66.7	0.0	-	2.9	94.1	2.9	0.0	-	16.7	0.0	83.3	0.0	-	0.0	100.0	0.0	0.0	-	-
Total %	0.0	1.5	2.9	0.0	4.4	1.5	47.1	1.5	0.0	50.0	1.5	0.0	7.4	0.0	8.8	0.0	36.8	0.0	0.0	36.8	-
PHF	0.000	0.250	0.250	0.000	0.375	0.250	0.727	0.250	0.000	0.773	0.250	0.000	0.625	0.000	0.750	0.000	0.625	0.000	0.000	0.625	0.773
Lights	0	1	2	0	3	1	32	1	0	34	1	0	5	0	6	0	25	0	0	25	68
% Lights	-	100.0	100.0	-	100.0	100.0	100.0	100.0	-	100.0	100.0	-	100.0	-	100.0	-	100.0	-	-	100.0	100.0
Other Vehicles	0	0	0	0	0	0	0	0	0	0	0	0	0	0	0	0	0	0	0	0	0
% Other Vehicles	-	0.0	0.0	-	0.0	0.0	0.0	0.0	-	0.0	0.0	-	0.0	-	0.0	-	0.0	-	-	0.0	0.0

Stantec Consulting Ltd.
300 - 1919 Rose St

Regina, Saskatchewan, Canada S4P 3P1
306 781 6400 erin.harms@stantec.com

Count Name: T16 (Township Rd 354 & Range Rd 3052)
Site Code:
Start Date: 05-19-2023

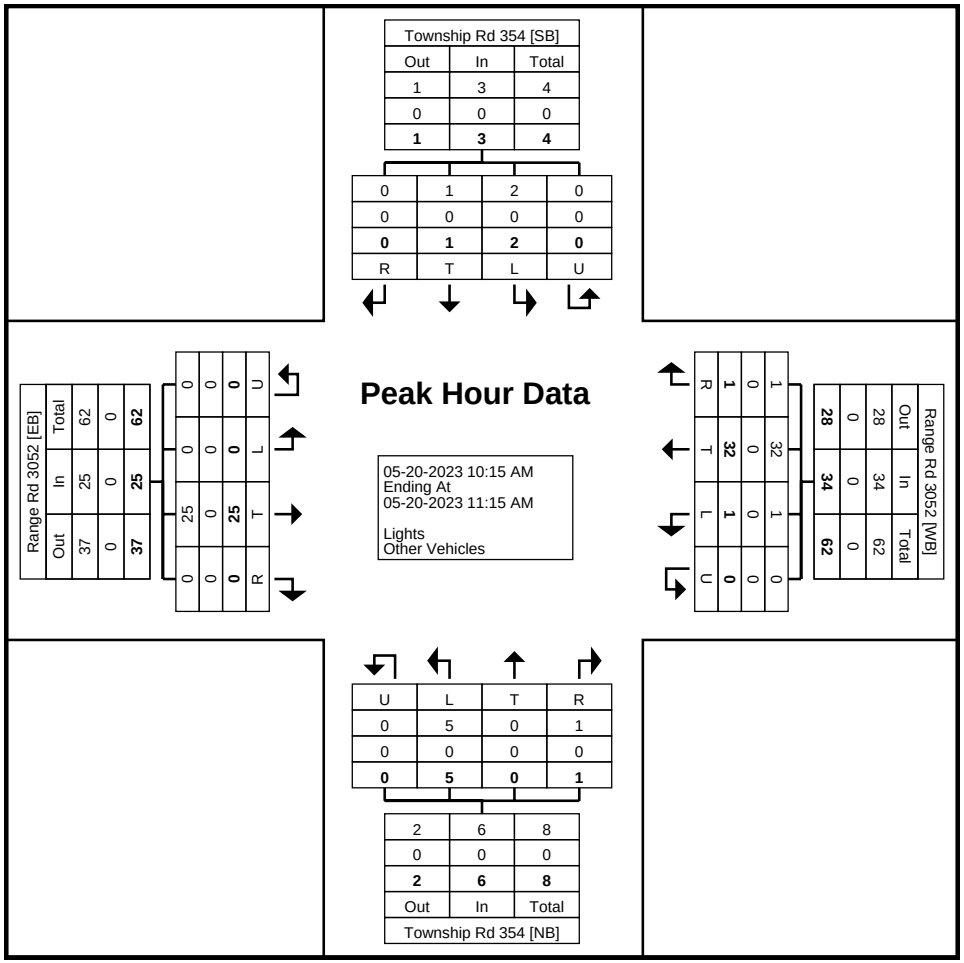

Turning Movement Peak Hour Data Plot (10:15 AM)

Stantec Consulting Ltd.
300 - 1919 Rose St

Regina, Saskatchewan, Canada S4P 3P1
306 781 6400 erin.harms@stantec.com

Count Name: T16 (Township Rd 354 & Range Rd 3052)
Site Code:
Start Date: 05-19-2023

Turning Movement Peak Hour Data (12:45 PM)

Start Time	Township Rd 354 Southbound					Range Rd 3052 Westbound					Township Rd 354 Northbound					Range Rd 3052 Eastbound					
	Right	Thru	Left	U-Turn	App. Total	Right	Thru	Left	U-Turn	App. Total	Right	Thru	Left	U-Turn	App. Total	Right	Thru	Left	U-Turn	App. Total	Int. Total
12:45 PM	0	1	0	0	1	1	7	0	0	8	0	0	1	0	1	1	5	0	0	6	16
1:00 PM	0	0	0	0	0	0	7	0	0	7	1	1	0	0	2	1	6	0	0	7	16
1:15 PM	1	0	0	0	1	1	11	0	0	12	0	0	1	0	1	1	4	0	0	5	19
1:30 PM	1	1	0	0	2	0	2	0	0	2	2	0	0	0	2	1	6	0	0	7	13
Total	2	2	0	0	4	2	27	0	0	29	3	1	2	0	6	4	21	0	0	25	64
Approach %	50.0	50.0	0.0	0.0	-	6.9	93.1	0.0	0.0	-	50.0	16.7	33.3	0.0	-	16.0	84.0	0.0	0.0	-	-
Total %	3.1	3.1	0.0	0.0	6.3	3.1	42.2	0.0	0.0	45.3	4.7	1.6	3.1	0.0	9.4	6.3	32.8	0.0	0.0	39.1	-
PHF	0.500	0.500	0.000	0.000	0.500	0.500	0.614	0.000	0.000	0.604	0.375	0.250	0.500	0.000	0.750	1.000	0.875	0.000	0.000	0.893	0.842
Lights	2	2	0	0	4	2	27	0	0	29	3	1	2	0	6	4	21	0	0	25	64
% Lights	100.0	100.0	-	-	100.0	100.0	100.0	-	-	100.0	100.0	100.0	100.0	-	100.0	100.0	100.0	-	-	100.0	100.0
Other Vehicles	0	0	0	0	0	0	0	0	0	0	0	0	0	0	0	0	0	0	0	0	0
% Other Vehicles	0.0	0.0	-	-	0.0	0.0	0.0	-	-	0.0	0.0	0.0	0.0	-	0.0	0.0	0.0	-	-	0.0	0.0

Stantec Consulting Ltd.
300 - 1919 Rose St

Regina, Saskatchewan, Canada S4P 3P1
306 781 6400 erin.harms@stantec.com

Count Name: T16 (Township Rd 354 & Range Rd 3052)
Site Code:
Start Date: 05-19-2023
Page No: 10

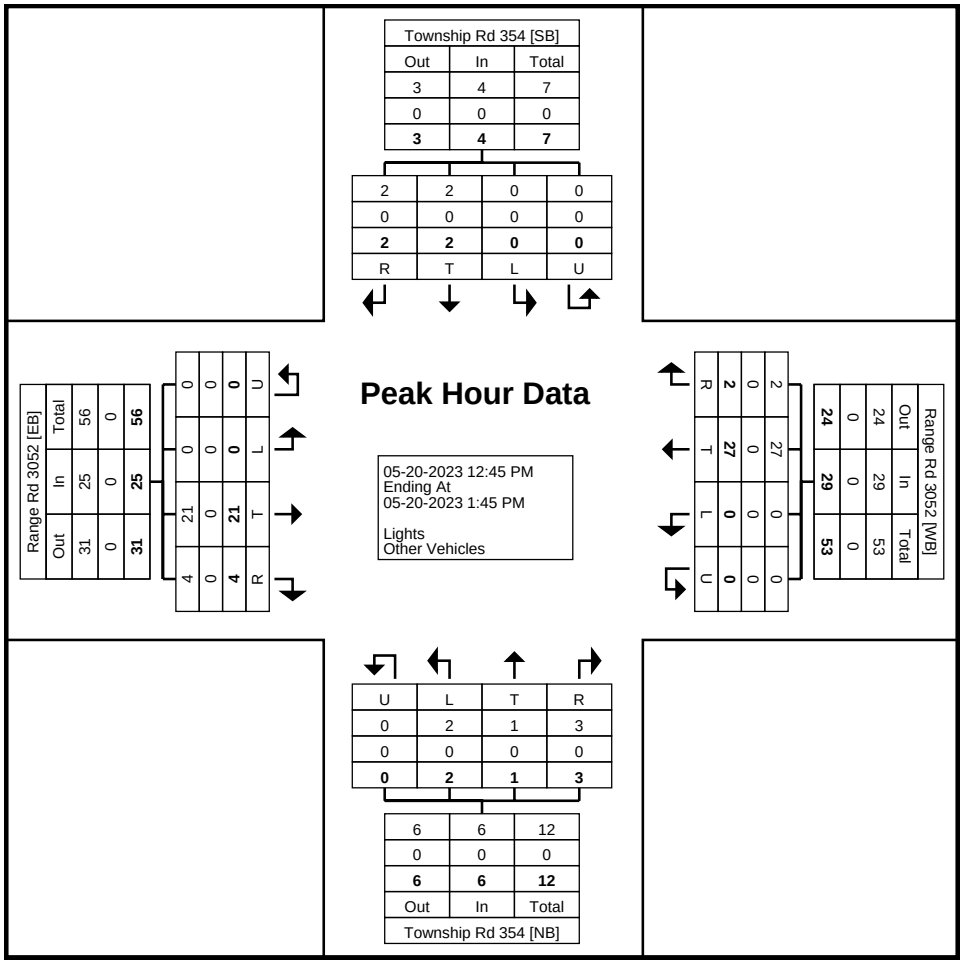

Turning Movement Peak Hour Data Plot (12:45 PM)

Stantec Consulting Ltd.
300 - 1919 Rose St

Regina, Saskatchewan, Canada S4P 3P1
306 781 6400 erin.harms@stantec.com

Count Name: T17 (Grasswood Rd & Range Rd 3052)
Site Code:
Start Date: 05-17-2023

Turning Movement Data

Start Time	Range Road 3052 Southbound					Grasswood Rd Westbound					Range Road 3052 Northbound					Grasswood Rd Eastbound					
	Right	Thru	Left	U-Turn	App. Total	Right	Thru	Left	U-Turn	App. Total	Right	Thru	Left	U-Turn	App. Total	Right	Thru	Left	U-Turn	App. Total	Int. Total
2:30 PM	1	0	0	0	1	0	25	1	0	26	0	0	1	0	1	0	16	0	0	16	44
2:45 PM	0	0	0	0	0	0	20	1	0	21	2	0	2	0	4	1	27	0	0	28	53
Hourly Total	1	0	0	0	1	0	45	2	0	47	2	0	3	0	5	1	43	0	0	44	97
3:00 PM	0	0	0	0	0	0	18	2	0	20	2	0	1	0	3	0	24	0	0	24	47
3:15 PM	0	0	0	0	0	0	33	3	0	36	3	0	2	0	5	1	15	0	0	16	57
3:30 PM	0	0	0	0	0	2	43	0	0	45	1	0	1	0	2	1	19	0	0	20	67
3:45 PM	1	0	0	0	1	0	33	4	0	37	3	0	2	0	5	2	26	1	0	29	72
Hourly Total	1	0	0	0	1	2	127	9	0	138	9	0	6	0	15	4	84	1	0	89	243
4:00 PM	0	0	0	0	0	0	29	1	0	30	0	0	1	0	1	2	35	1	0	38	69
4:15 PM	0	0	2	0	2	3	48	2	0	53	2	0	3	0	5	2	37	2	0	41	101
4:30 PM	2	0	3	0	5	0	49	2	0	51	2	0	3	0	5	0	38	1	0	39	100
4:45 PM	0	0	0	0	0	0	43	4	0	47	1	0	3	0	4	1	48	0	0	49	100
Hourly Total	2	0	5	0	7	3	169	9	0	181	5	0	10	0	15	5	158	4	0	167	370
5:00 PM	0	0	1	0	1	0	44	3	0	47	0	0	2	0	2	3	33	0	0	36	86
5:15 PM	1	0	0	0	1	2	24	0	0	26	1	0	2	0	3	3	41	0	0	44	74
5:30 PM	0	0	0	0	0	0	32	4	0	36	1	0	0	0	1	0	39	0	0	39	76
5:45 PM	0	0	0	0	0	0	33	1	0	34	1	0	1	0	2	0	35	0	0	35	71
Hourly Total	1	0	1	0	2	2	133	8	0	143	3	0	5	0	8	6	148	0	0	154	307
6:00 PM	1	0	0	0	1	0	30	2	0	32	0	0	1	0	1	2	32	0	0	34	68
6:15 PM	0	0	1	0	1	0	33	0	0	33	2	0	1	0	3	2	29	0	0	31	68
6:30 PM	0	0	0	0	0	0	42	2	0	44	2	0	2	0	4	3	27	0	0	30	78
6:45 PM	0	0	0	0	0	3	33	0	0	36	0	0	1	0	1	2	15	1	0	18	55
Hourly Total	1	0	1	0	2	3	138	4	0	145	4	0	5	0	9	9	103	1	0	113	269
7:00 PM	0	0	1	0	1	1	30	0	0	31	0	0	2	0	2	3	21	0	0	24	58
7:15 PM	0	0	0	0	0	0	22	2	0	24	0	0	1	0	1	0	17	0	0	17	42
7:30 PM	0	0	0	0	0	0	26	0	0	26	0	0	2	0	2	0	16	0	0	16	44
7:45 PM	1	0	0	0	1	0	14	1	0	15	2	0	2	0	4	2	19	0	0	21	41
Hourly Total	1	0	1	0	2	1	92	3	0	96	2	0	7	0	9	5	73	0	0	78	185
8:00 PM	1	0	0	0	1	0	16	0	0	16	0	0	2	0	2	1	17	1	0	19	38
8:15 PM	0	0	0	0	0	0	20	1	0	21	1	0	0	0	1	0	25	0	0	25	47
8:30 PM	0	0	0	0	0	0	20	0	0	20	0	0	1	0	1	1	26	1	0	28	49
8:45 PM	0	0	0	0	0	0	16	2	0	18	1	0	2	0	3	0	21	0	0	21	42
Hourly Total	1	0	0	0	1	0	72	3	0	75	2	0	5	0	7	2	89	2	0	93	176
9:00 PM	0	0	0	0	0	0	17	0	0	17	1	0	1	0	2	2	5	0	0	7	26
9:15 PM	1	0	1	0	2	1	10	0	0	11	0	0	0	0	0	2	8	0	0	10	23
9:30 PM	1	0	0	0	1	0	8	0	0	8	1	0	0	0	1	1	3	0	0	4	14

9:45 PM	0	0	0	0	0	0	22	1	0	23	0	0	0	0	0	0	6	0	0	6	29
Hourly Total	2	0	1	0	3	1	57	1	0	59	2	0	1	0	3	5	22	0	0	27	92
10:00 PM	0	0	2	0	2	0	15	0	0	15	0	0	1	0	1	1	2	0	0	3	21
10:15 PM	0	0	0	0	0	0	13	1	0	14	1	0	0	0	1	0	8	0	0	8	23
10:30 PM	0	0	0	0	0	0	9	2	0	11	0	0	0	0	0	0	2	0	0	2	13
10:45 PM	0	0	0	0	0	0	5	1	0	6	0	0	0	0	0	1	3	0	0	4	10
Hourly Total	0	0	2	0	2	0	42	4	0	46	1	0	1	0	2	2	15	0	0	17	67
11:00 PM	0	0	0	0	0	0	4	0	0	4	0	0	0	0	0	0	3	0	0	3	7
11:15 PM	0	0	0	0	0	0	3	0	0	3	0	0	0	0	0	0	6	0	0	6	9
11:30 PM	0	0	0	0	0	1	5	0	0	6	0	0	0	0	0	0	1	0	0	1	7
11:45 PM	0	0	0	0	0	0	3	0	0	3	0	0	0	0	0	0	4	0	0	4	7
Hourly Total	0	0	0	0	0	1	15	0	0	16	0	0	0	0	0	0	14	0	0	14	30
12:00 AM	0	0	0	0	0	0	2	0	0	2	0	0	0	0	0	0	1	0	0	1	3
12:15 AM	0	0	0	0	0	0	1	0	0	1	0	0	0	0	0	0	3	0	0	3	4
12:30 AM	0	0	0	0	0	0	1	0	0	1	0	0	0	0	0	0	0	0	0	0	1
12:45 AM	0	0	0	0	0	0	0	0	0	0	0	0	0	0	0	0	1	0	0	1	1
Hourly Total	0	0	0	0	0	0	4	0	0	4	0	0	0	0	0	0	5	0	0	5	9
1:00 AM	0	0	0	0	0	0	1	0	0	1	0	0	0	0	0	0	1	0	0	1	2
1:15 AM	0	0	0	0	0	0	0	0	0	0	0	0	0	0	0	0	2	0	0	2	2
1:30 AM	0	0	0	0	0	0	2	0	0	2	0	0	0	0	0	0	1	0	0	1	3
1:45 AM	0	0	0	0	0	0	0	0	0	0	0	0	0	0	0	0	1	0	0	1	1
Hourly Total	0	0	0	0	0	0	3	0	0	3	0	0	0	0	0	0	5	0	0	5	8
2:00 AM	0	0	0	0	0	0	1	0	0	1	0	0	0	0	0	0	0	0	0	0	1
2:15 AM	0	0	0	0	0	0	0	0	0	0	0	0	0	0	0	0	2	0	0	2	2
2:30 AM	0	0	0	0	0	0	0	0	0	0	0	0	0	0	0	0	0	0	0	0	0
2:45 AM	0	0	0	0	0	0	2	0	0	2	0	0	0	0	0	0	0	0	0	0	2
Hourly Total	0	0	0	0	0	0	3	0	0	3	0	0	0	0	0	0	2	0	0	2	5
3:00 AM	0	0	0	0	0	0	0	0	0	0	0	0	0	0	0	0	1	0	0	1	1
3:15 AM	0	0	0	0	0	0	0	0	0	0	0	0	0	0	0	0	1	0	0	1	1
3:30 AM	0	0	0	0	0	0	0	0	0	0	0	0	0	0	0	0	3	0	0	3	3
3:45 AM	0	0	0	0	0	0	0	0	0	0	0	0	0	0	0	0	3	0	0	3	3
Hourly Total	0	0	0	0	0	0	0	0	0	0	0	0	0	0	0	0	8	0	0	8	8
4:00 AM	0	0	0	0	0	0	1	0	0	1	0	0	0	0	0	0	1	0	0	1	2
4:15 AM	0	0	0	0	0	0	2	0	0	2	0	0	0	0	0	0	1	0	0	1	3
4:30 AM	0	0	0	0	0	0	2	0	0	2	0	0	0	0	0	0	0	0	0	0	2
4:45 AM	0	0	0	0	0	0	6	0	0	6	0	0	0	0	0	0	0	0	0	0	6
Hourly Total	0	0	0	0	0	0	11	0	0	11	0	0	0	0	0	0	2	0	0	2	13
5:00 AM	0	0	0	0	0	0	1	0	0	1	0	0	0	0	0	0	4	0	0	4	5
5:15 AM	0	0	0	0	0	0	3	0	0	3	0	0	0	0	0	0	1	0	0	1	4
5:30 AM	0	0	0	0	0	0	0	0	0	0	0	0	0	0	0	0	3	0	0	3	3
5:45 AM	0	0	0	0	0	0	4	0	0	4	0	0	0	0	0	0	4	0	0	4	8
Hourly Total	0	0	0	0	0	0	8	0	0	8	0	0	0	0	0	0	12	0	0	12	20
6:00 AM	0	0	0	0	0	0	6	0	0	6	1	0	1	0	2	0	5	0	0	5	13
6:15 AM	1	0	0	0	1	0	5	0	0	5	0	0	0	0	0	0	5	0	0	5	11
6:30 AM	0	0	0	0	0	0	12	0	0	12	0	0	2	0	2	0	9	0	0	9	23
6:45 AM	0	0	0	0	0	0	19	0	0	19	0	0	0	0	0	2	9	0	0	11	30
Hourly Total	1	0	0	0	1	0	42	0	0	42	1	0	3	0	4	2	28	0	0	30	77
7:00 AM	0	0	0	0	0	0	17	0	0	17	0	0	2	0	2	1	8	0	0	9	28
7:15 AM	0	0	0	0	0	0	18	0	0	18	0	0	2	0	2	1	14	1	0	16	36
7:30 AM	0	0	0	0	0	3	32	1	0	36	0	0	6	0	6	1	17	3	0	21	63
7:45 AM	0	0	0	0	0	0	34	2	0	36	1	0	4	0	5	0	14	2	0	16	57
Hourly Total	0	0	0	0	0	3	101	3	0	107	1	0	14	0	15	3	53	6	0	62	184

8:00 AM	2	0	2	0	4	0	21	1	0	22	0	0	3	0	3	1	18	1	0	20	49
8:15 AM	0	0	2	0	2	1	31	2	0	34	2	0	1	0	3	0	21	0	0	21	60
8:30 AM	0	0	1	0	1	0	31	0	0	31	4	0	3	0	7	1	23	2	0	26	65
8:45 AM	0	0	1	0	1	1	30	4	0	35	1	0	1	0	2	1	16	1	0	18	56
Hourly Total	2	0	6	0	8	2	113	7	0	122	7	0	8	0	15	3	78	4	0	85	230
9:00 AM	0	0	0	0	0	0	35	1	0	36	0	0	3	0	3	1	14	0	0	15	54
9:15 AM	1	0	0	0	1	0	26	3	0	29	1	0	0	0	1	0	17	0	0	17	48
9:30 AM	0	0	0	0	0	0	20	0	0	20	0	0	0	0	0	1	13	0	0	14	34
9:45 AM	0	0	0	0	0	0	20	1	0	21	2	0	0	0	2	0	18	0	0	18	41
Hourly Total	1	0	0	0	1	0	101	5	0	106	3	0	3	0	6	2	62	0	0	64	177
10:00 AM	0	0	0	0	0	0	16	3	0	19	1	0	1	0	2	0	12	2	0	14	35
10:15 AM	0	0	0	0	0	0	25	2	0	27	0	0	1	0	1	1	17	0	0	18	46
10:30 AM	0	0	2	0	2	0	23	1	0	24	1	0	0	0	1	0	13	0	0	13	40
10:45 AM	0	0	0	0	0	0	20	0	0	20	0	0	0	0	0	0	18	0	0	18	38
Hourly Total	0	0	2	0	2	0	84	6	0	90	2	0	2	0	4	1	60	2	0	63	159
11:00 AM	0	0	0	0	0	1	20	2	0	23	0	0	2	0	2	1	18	0	0	19	44
11:15 AM	1	0	0	0	1	0	27	3	0	30	4	0	0	0	4	0	13	2	0	15	50
11:30 AM	1	0	0	0	1	0	25	1	0	26	2	0	1	0	3	2	13	0	0	15	45
11:45 AM	1	0	0	0	1	0	27	0	0	27	2	0	3	0	5	0	17	0	0	17	50
Hourly Total	3	0	0	0	3	1	99	6	0	106	8	0	6	0	14	3	61	2	0	66	189
12:00 PM	0	0	0	0	0	0	32	0	0	32	3	0	1	0	4	2	18	0	0	20	56
12:15 PM	2	0	0	0	2	0	34	2	0	36	1	0	1	0	2	0	18	0	0	18	58
12:30 PM	1	0	1	0	2	0	35	0	0	35	2	0	0	0	2	0	18	0	0	18	57
12:45 PM	0	0	0	0	0	0	33	2	0	35	0	0	1	0	1	1	30	1	0	32	68
Hourly Total	3	0	1	0	4	0	134	4	0	138	6	0	3	0	9	3	84	1	0	88	239
1:00 PM	0	0	0	0	0	0	30	0	0	30	1	0	1	0	2	0	34	1	0	35	67
1:15 PM	1	0	0	0	1	1	22	2	0	25	1	0	1	0	2	1	13	1	0	15	43
1:30 PM	1	0	0	0	1	0	27	1	0	28	0	0	0	0	0	0	4	1	0	5	34
1:45 PM	0	0	0	0	0	0	20	2	0	22	1	0	0	0	1	2	20	1	0	23	46
Hourly Total	2	0	0	0	2	1	99	5	0	105	3	0	2	0	5	3	71	4	0	78	190
2:00 PM	2	0	0	0	2	0	26	2	0	28	1	0	2	0	3	1	24	0	0	25	58
2:15 PM	0	0	0	0	0	0	24	4	0	28	1	0	1	0	2	1	16	0	0	17	47
Grand Total	24	0	20	0	44	20	1742	85	0	1847	63	0	87	0	150	61	1320	27	0	1408	3449
Approach %	54.5	0.0	45.5	0.0	-	1.1	94.3	4.6	0.0	-	42.0	0.0	58.0	0.0	-	4.3	93.8	1.9	0.0	-	-
Total %	0.7	0.0	0.6	0.0	1.3	0.6	50.5	2.5	0.0	53.6	1.8	0.0	2.5	0.0	4.3	1.8	38.3	0.8	0.0	40.8	-
Lights	23	0	19	0	42	19	1699	81	0	1799	55	0	83	0	138	59	1293	26	0	1378	3357
% Lights	95.8	-	95.0	-	95.5	95.0	97.5	95.3	-	97.4	87.3	-	95.4	-	92.0	96.7	98.0	96.3	-	97.9	97.3
Other Vehicles	1	0	1	0	2	1	43	4	0	48	8	0	4	0	12	2	27	1	0	30	92
% Other Vehicles	4.2	-	5.0	-	4.5	5.0	2.5	4.7	-	2.6	12.7	-	4.6	-	8.0	3.3	2.0	3.7	-	2.1	2.7

Stantec Consulting Ltd.
300 - 1919 Rose St

Regina, Saskatchewan, Canada S4P 3P1
306 781 6400 erin.harms@stantec.com

Count Name: T17 (Grasswood Rd & Range Rd 3052)
Site Code:
Start Date: 05-17-2023

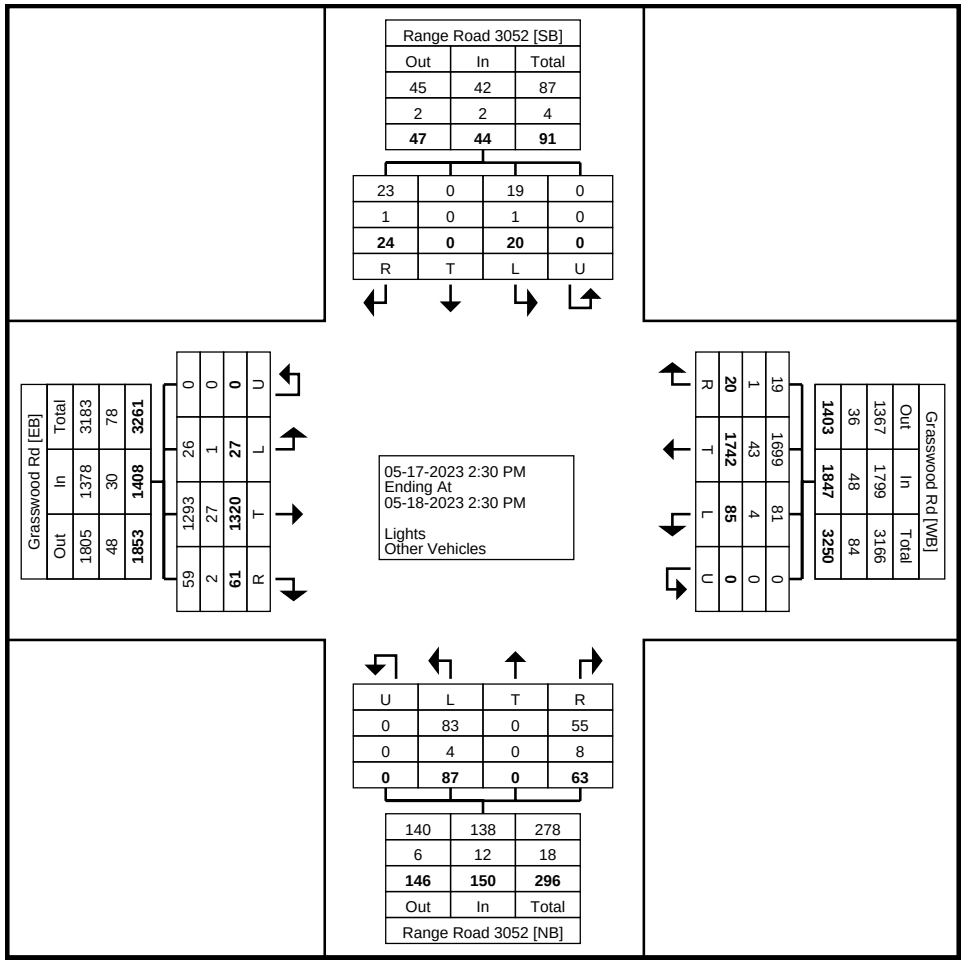

Turning Movement Data Plot

Stantec Consulting Ltd.
300 - 1919 Rose St

Regina, Saskatchewan, Canada S4P 3P1
306 781 6400 erin.harms@stantec.com

Count Name: T17 (Grasswood Rd & Range Rd 3052)
Site Code:
Start Date: 05-17-2023

Turning Movement Peak Hour Data (4:15 PM)

Start Time	Range Road 3052 Southbound					Grasswood Rd Westbound					Range Road 3052 Northbound					Grasswood Rd Eastbound					
	Right	Thru	Left	U-Turn	App. Total	Right	Thru	Left	U-Turn	App. Total	Right	Thru	Left	U-Turn	App. Total	Right	Thru	Left	U-Turn	App. Total	Int. Total
4:15 PM	0	0	2	0	2	3	48	2	0	53	2	0	3	0	5	2	37	2	0	41	101
4:30 PM	2	0	3	0	5	0	49	2	0	51	2	0	3	0	5	0	38	1	0	39	100
4:45 PM	0	0	0	0	0	0	43	4	0	47	1	0	3	0	4	1	48	0	0	49	100
5:00 PM	0	0	1	0	1	0	44	3	0	47	0	0	2	0	2	3	33	0	0	36	86
Total	2	0	6	0	8	3	184	11	0	198	5	0	11	0	16	6	156	3	0	165	387
Approach %	25.0	0.0	75.0	0.0	-	1.5	92.9	5.6	0.0	-	31.3	0.0	68.8	0.0	-	3.6	94.5	1.8	0.0	-	-
Total %	0.5	0.0	1.6	0.0	2.1	0.8	47.5	2.8	0.0	51.2	1.3	0.0	2.8	0.0	4.1	1.6	40.3	0.8	0.0	42.6	-
PHF	0.250	0.000	0.500	0.000	0.400	0.250	0.939	0.688	0.000	0.934	0.625	0.000	0.917	0.000	0.800	0.500	0.813	0.375	0.000	0.842	0.958
Lights	2	0	6	0	8	3	179	11	0	193	4	0	11	0	15	6	154	3	0	163	379
% Lights	100.0	-	100.0	-	100.0	100.0	97.3	100.0	-	97.5	80.0	-	100.0	-	93.8	100.0	98.7	100.0	-	98.8	97.9
Other Vehicles	0	0	0	0	0	0	5	0	0	5	1	0	0	0	1	0	2	0	0	2	8
% Other Vehicles	0.0	-	0.0	-	0.0	0.0	2.7	0.0	-	2.5	20.0	-	0.0	-	6.3	0.0	1.3	0.0	-	1.2	2.1

Stantec Consulting Ltd.
300 - 1919 Rose St

Regina, Saskatchewan, Canada S4P 3P1
306 781 6400 erin.harms@stantec.com

Count Name: T17 (Grasswood Rd & Range Rd 3052)
Site Code:
Start Date: 05-17-2023

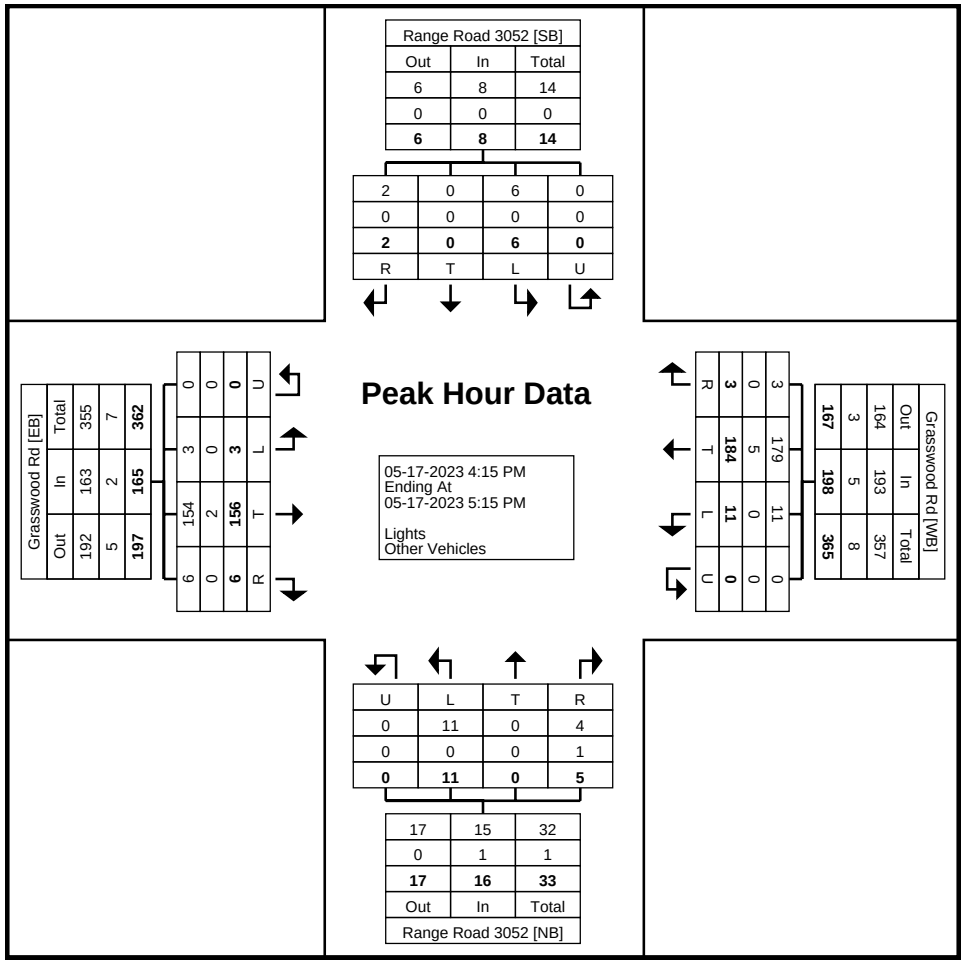

Turning Movement Peak Hour Data Plot (4:15 PM)

Stantec Consulting Ltd.
300 - 1919 Rose St

Regina, Saskatchewan, Canada S4P 3P1
306 781 6400 erin.harms@stantec.com

Count Name: T17 (Grasswood Rd & Range Rd 3052)
Site Code:
Start Date: 05-17-2023

Turning Movement Peak Hour Data (8:15 AM)

Start Time	Range Road 3052 Southbound					Grasswood Rd Westbound					Range Road 3052 Northbound					Grasswood Rd Eastbound					
	Right	Thru	Left	U-Turn	App. Total	Right	Thru	Left	U-Turn	App. Total	Right	Thru	Left	U-Turn	App. Total	Right	Thru	Left	U-Turn	App. Total	Int. Total
8:15 AM	0	0	2	0	2	1	31	2	0	34	2	0	1	0	3	0	21	0	0	21	60
8:30 AM	0	0	1	0	1	0	31	0	0	31	4	0	3	0	7	1	23	2	0	26	65
8:45 AM	0	0	1	0	1	1	30	4	0	35	1	0	1	0	2	1	16	1	0	18	56
9:00 AM	0	0	0	0	0	0	35	1	0	36	0	0	3	0	3	1	14	0	0	15	54
Total	0	0	4	0	4	2	127	7	0	136	7	0	8	0	15	3	74	3	0	80	235
Approach %	0.0	0.0	100.0	0.0	-	1.5	93.4	5.1	0.0	-	46.7	0.0	53.3	0.0	-	3.8	92.5	3.8	0.0	-	-
Total %	0.0	0.0	1.7	0.0	1.7	0.9	54.0	3.0	0.0	57.9	3.0	0.0	3.4	0.0	6.4	1.3	31.5	1.3	0.0	34.0	-
PHF	0.000	0.000	0.500	0.000	0.500	0.500	0.907	0.438	0.000	0.944	0.438	0.000	0.667	0.000	0.536	0.750	0.804	0.375	0.000	0.769	0.904
Lights	0	0	3	0	3	2	125	6	0	133	6	0	8	0	14	2	73	3	0	78	228
% Lights	-	-	75.0	-	75.0	100.0	98.4	85.7	-	97.8	85.7	-	100.0	-	93.3	66.7	98.6	100.0	-	97.5	97.0
Other Vehicles	0	0	1	0	1	0	2	1	0	3	1	0	0	0	1	1	1	0	0	2	7
% Other Vehicles	-	-	25.0	-	25.0	0.0	1.6	14.3	-	2.2	14.3	-	0.0	-	6.7	33.3	1.4	0.0	-	2.5	3.0

Stantec Consulting Ltd.
300 - 1919 Rose St

Regina, Saskatchewan, Canada S4P 3P1
306 781 6400 erin.harms@stantec.com

Count Name: T17 (Grasswood Rd & Range Rd 3052)
Site Code:
Start Date: 05-17-2023

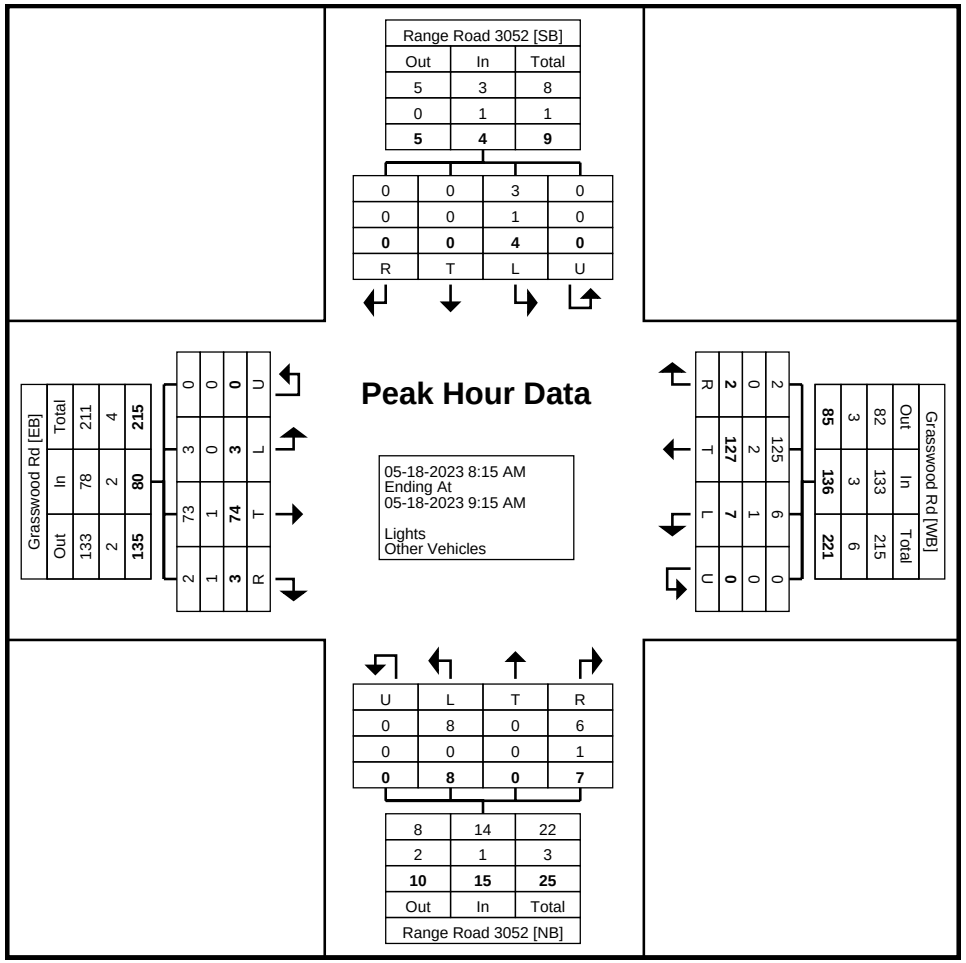

Turning Movement Peak Hour Data Plot (8:15 AM)

Stantec Consulting Ltd.
300 - 1919 Rose St

Regina, Saskatchewan, Canada S4P 3P1
306 781 6400 erin.harms@stantec.com

Count Name: T17 (Grasswood Rd & Range Rd 3052)
Site Code:
Start Date: 05-17-2023

Turning Movement Peak Hour Data (12:15 PM)

Start Time	Range Road 3052 Southbound					Grasswood Rd Westbound					Range Road 3052 Northbound					Grasswood Rd Eastbound					
	Right	Thru	Left	U-Turn	App. Total	Right	Thru	Left	U-Turn	App. Total	Right	Thru	Left	U-Turn	App. Total	Right	Thru	Left	U-Turn	App. Total	Int. Total
12:15 PM	2	0	0	0	2	0	34	2	0	36	1	0	1	0	2	0	18	0	0	18	58
12:30 PM	1	0	1	0	2	0	35	0	0	35	2	0	0	0	2	0	18	0	0	18	57
12:45 PM	0	0	0	0	0	0	33	2	0	35	0	0	1	0	1	1	30	1	0	32	68
1:00 PM	0	0	0	0	0	0	30	0	0	30	1	0	1	0	2	0	34	1	0	35	67
Total	3	0	1	0	4	0	132	4	0	136	4	0	3	0	7	1	100	2	0	103	250
Approach %	75.0	0.0	25.0	0.0	-	0.0	97.1	2.9	0.0	-	57.1	0.0	42.9	0.0	-	1.0	97.1	1.9	0.0	-	-
Total %	1.2	0.0	0.4	0.0	1.6	0.0	52.8	1.6	0.0	54.4	1.6	0.0	1.2	0.0	2.8	0.4	40.0	0.8	0.0	41.2	-
PHF	0.375	0.000	0.250	0.000	0.500	0.000	0.943	0.500	0.000	0.944	0.500	0.000	0.750	0.000	0.875	0.250	0.735	0.500	0.000	0.736	0.919
Lights	3	0	1	0	4	0	125	4	0	129	4	0	3	0	7	1	95	2	0	98	238
% Lights	100.0	-	100.0	-	100.0	-	94.7	100.0	-	94.9	100.0	-	100.0	-	100.0	100.0	95.0	100.0	-	95.1	95.2
Other Vehicles	0	0	0	0	0	0	7	0	0	7	0	0	0	0	0	0	5	0	0	5	12
% Other Vehicles	0.0	-	0.0	-	0.0	-	5.3	0.0	-	5.1	0.0	-	0.0	-	0.0	0.0	5.0	0.0	-	4.9	4.8

Stantec Consulting Ltd.
300 - 1919 Rose St

Regina, Saskatchewan, Canada S4P 3P1
306 781 6400 erin.harms@stantec.com

Count Name: T17 (Grasswood Rd & Range Rd 3052)
Site Code:
Start Date: 05-17-2023

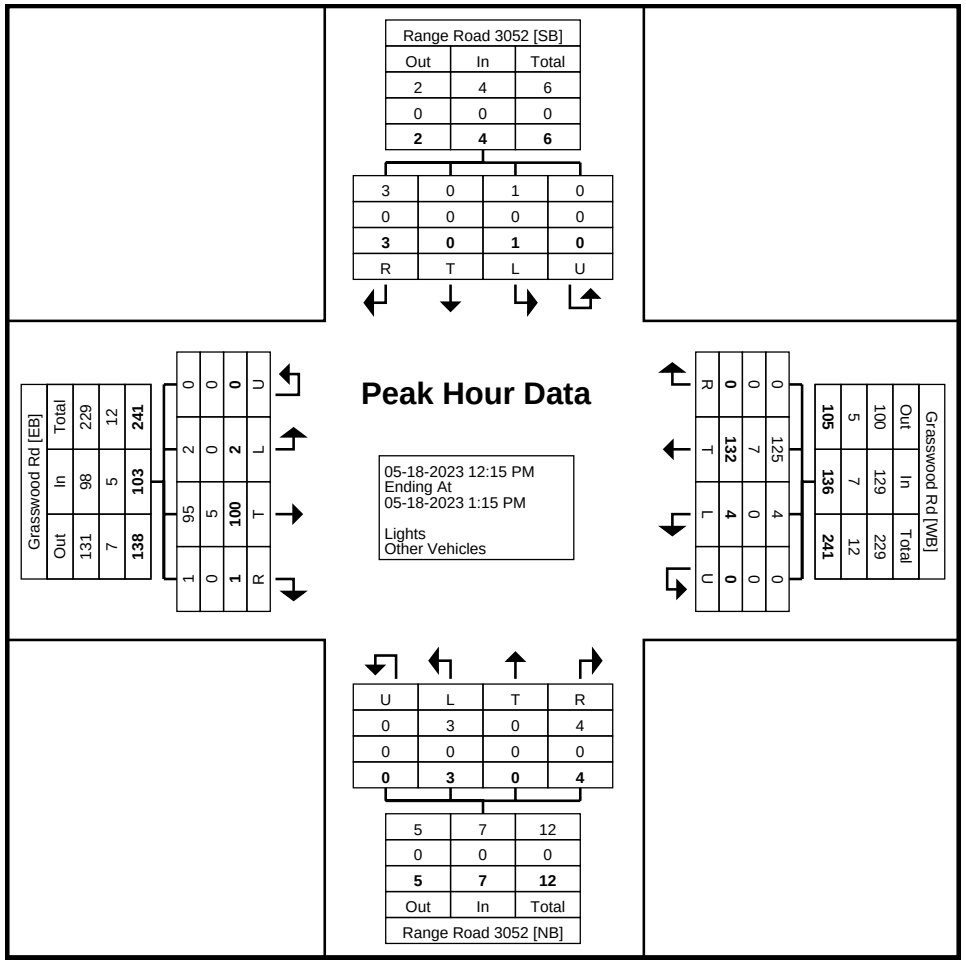

Turning Movement Peak Hour Data Plot (12:15 PM)

Stantec Consulting Ltd.
300 - 1919 Rose St

Regina, Saskatchewan, Canada S4P 3P1
306 781 6400 erin.harms@stantec.com

Count Name: T18 (Grasswood Rd & Clarence Ave S)
Site Code:
Start Date: 05-17-2023

Turning Movement Data

Start Time	Clarence Ave S Southbound					Grasswood Rd Westbound					Clarence Ave S Northbound					Grasswood Rd Eastbound					
	Right	Thru	Left	U-Turn	App. Total	Right	Thru	Left	U-Turn	App. Total	Right	Thru	Left	U-Turn	App. Total	Right	Thru	Left	U-Turn	App. Total	Int. Total
3:15 PM	16	11	8	0	35	12	20	3	0	35	3	11	2	0	16	3	6	7	0	16	102
3:30 PM	16	26	11	0	53	17	19	6	0	42	1	20	2	0	23	2	10	11	0	23	141
3:45 PM	16	18	17	0	51	12	21	6	0	39	7	6	2	0	15	3	7	14	0	24	129
Hourly Total	48	55	36	0	139	41	60	15	0	116	11	37	6	0	54	8	23	32	0	63	372
4:00 PM	23	12	15	0	50	16	12	1	0	29	5	13	0	0	18	4	16	12	0	32	129
4:15 PM	12	17	21	0	50	19	20	8	0	47	4	10	2	0	16	3	17	11	0	31	144
4:30 PM	13	16	21	0	50	24	22	5	0	51	4	12	0	0	16	3	18	10	0	31	148
4:45 PM	17	22	25	0	64	26	23	2	0	51	4	12	0	0	16	3	15	13	0	31	162
Hourly Total	65	67	82	0	214	85	77	16	0	178	17	47	2	0	66	13	66	46	0	125	583
5:00 PM	13	14	24	0	51	17	27	2	0	46	2	10	2	0	14	2	11	11	0	24	135
5:15 PM	21	18	20	0	59	15	12	2	0	29	7	11	2	0	20	1	17	10	0	28	136
5:30 PM	13	25	21	0	59	13	13	6	0	32	8	12	0	0	20	2	16	13	0	31	142
5:45 PM	5	13	19	0	37	18	14	6	0	38	3	11	0	0	14	2	12	6	0	20	109
Hourly Total	52	70	84	0	206	63	66	16	0	145	20	44	4	0	68	7	56	40	0	103	522
6:00 PM	15	20	17	0	52	13	12	4	0	29	4	12	1	0	17	1	13	4	0	18	116
6:15 PM	20	10	12	0	42	16	16	6	0	38	3	11	0	0	14	0	18	11	0	29	123
6:30 PM	7	10	15	0	32	16	26	5	0	47	4	8	1	0	13	1	13	7	0	21	113
6:45 PM	11	7	7	0	25	15	11	6	0	32	3	4	0	0	7	1	8	8	0	17	81
Hourly Total	53	47	51	0	151	60	65	21	0	146	14	35	2	0	51	3	52	30	0	85	433
7:00 PM	6	11	8	0	25	16	17	2	0	35	0	11	0	0	11	0	15	8	0	23	94
7:15 PM	8	6	10	0	24	11	17	1	0	29	0	10	0	0	10	1	8	6	0	15	78
7:30 PM	11	12	6	0	29	11	11	2	0	24	0	4	1	0	5	3	10	6	0	19	77
7:45 PM	6	8	15	0	29	10	6	1	0	17	1	5	0	0	6	1	8	6	0	15	67
Hourly Total	31	37	39	0	107	48	51	6	0	105	1	30	1	0	32	5	41	26	0	72	316
8:00 PM	6	14	8	0	28	6	13	2	0	21	1	7	0	0	8	2	10	4	0	16	73
8:15 PM	6	11	10	0	27	9	11	2	0	22	1	8	0	0	9	1	14	8	0	23	81
8:30 PM	7	4	16	0	27	10	13	2	0	25	0	7	1	0	8	1	13	7	0	21	81
8:45 PM	8	4	6	0	18	4	5	4	0	13	2	5	1	0	8	1	12	11	0	24	63
Hourly Total	27	33	40	0	100	29	42	10	0	81	4	27	2	0	33	5	49	30	0	84	298
9:00 PM	8	4	2	0	14	7	12	3	0	22	0	3	0	0	3	1	4	4	0	9	48
9:15 PM	3	10	5	0	18	6	5	2	0	13	2	1	0	0	3	2	3	7	0	12	46
9:30 PM	3	2	3	0	8	2	4	2	0	8	0	3	0	0	3	3	2	1	0	6	25
9:45 PM	5	8	1	0	14	10	9	0	0	19	0	4	2	0	6	0	5	1	0	6	45
Hourly Total	19	24	11	0	54	25	30	7	0	62	2	11	2	0	15	6	14	13	0	33	164
10:00 PM	3	2	2	0	7	5	10	2	0	17	0	3	0	0	3	0	1	2	0	3	30
10:15 PM	2	3	2	0	7	10	4	0	0	14	2	3	0	0	5	0	4	1	0	5	31

10:30 PM	0	4	2	0	6	3	5	3	0	11	0	3	0	0	3	0	1	1	0	2	22
10:45 PM	1	0	1	0	2	5	1	0	0	6	0	3	0	0	3	1	2	2	0	5	16
Hourly Total	6	9	7	0	22	23	20	5	0	48	2	12	0	0	14	1	8	6	0	15	99
11:00 PM	0	4	1	0	5	1	3	0	0	4	0	1	0	0	1	0	2	1	0	3	13
11:15 PM	1	1	0	0	2	0	2	0	0	2	0	0	0	0	0	0	6	1	0	7	11
11:30 PM	1	1	0	0	2	3	3	0	0	6	1	0	0	0	1	0	0	5	0	5	14
11:45 PM	0	0	1	0	1	1	1	0	0	2	0	0	0	0	0	1	3	1	0	5	8
Hourly Total	2	6	2	0	10	5	9	0	0	14	1	1	0	0	2	1	11	8	0	20	46
12:00 AM	0	1	0	0	1	0	1	2	0	3	0	0	0	0	0	0	1	2	0	3	7
12:15 AM	3	0	1	0	4	1	0	0	0	1	0	1	0	0	1	0	2	1	0	3	9
12:30 AM	0	0	0	0	0	0	0	0	0	0	0	0	0	0	0	0	0	0	0	0	0
12:45 AM	0	0	0	0	0	0	1	0	0	1	0	0	0	0	0	0	1	1	0	2	3
Hourly Total	3	1	1	0	5	1	2	2	0	5	0	1	0	0	1	0	4	4	0	8	19
1:00 AM	1	0	1	0	2	0	1	0	0	1	0	1	0	0	1	0	1	1	0	2	6
1:15 AM	0	0	0	0	0	0	0	0	0	0	0	0	0	0	0	0	2	1	0	3	3
1:30 AM	0	0	0	0	0	0	1	1	0	2	0	0	0	0	0	0	1	0	0	1	3
1:45 AM	0	0	0	0	0	0	0	0	0	0	0	0	0	0	0	0	1	1	0	2	2
Hourly Total	1	0	1	0	2	0	2	1	0	3	0	1	0	0	1	0	5	3	0	8	14
2:00 AM	0	0	0	0	0	0	1	0	0	1	0	0	0	0	0	0	0	0	0	0	1
2:15 AM	0	0	0	0	0	0	0	0	0	0	0	0	0	0	0	0	2	0	0	2	2
2:30 AM	1	0	0	0	1	0	1	0	0	1	0	0	0	0	0	0	0	0	0	0	2
2:45 AM	0	0	0	0	0	1	1	0	0	2	0	0	0	0	0	0	0	1	0	1	3
Hourly Total	1	0	0	0	1	1	3	0	0	4	0	0	0	0	0	0	2	1	0	3	8
3:00 AM	0	0	0	0	0	0	0	0	0	0	0	0	0	0	0	0	1	2	0	3	3
3:15 AM	0	0	0	0	0	0	0	0	0	0	0	0	0	0	0	0	1	0	0	1	1
3:30 AM	0	0	0	0	0	0	0	0	0	0	0	0	0	0	0	0	3	2	0	5	5
3:45 AM	0	0	1	0	1	0	0	0	0	0	0	0	0	0	0	0	2	0	0	2	3
Hourly Total	0	0	1	0	1	0	0	0	0	0	0	0	0	0	0	0	7	4	0	11	12
4:00 AM	0	0	0	0	0	0	0	0	0	0	0	0	0	0	0	0	1	1	0	2	2
4:15 AM	0	0	0	0	0	0	2	0	0	2	0	0	1	0	1	0	2	2	0	4	7
4:30 AM	3	0	0	0	3	1	2	0	0	3	0	1	0	0	1	0	0	0	0	0	7
4:45 AM	1	1	0	0	2	0	7	0	0	7	0	0	0	0	0	0	0	2	0	2	11
Hourly Total	4	1	0	0	5	1	11	0	0	12	0	1	1	0	2	0	3	5	0	8	27
5:00 AM	1	0	2	0	3	1	0	0	0	1	0	0	0	0	0	0	1	1	0	2	6
5:15 AM	1	0	0	0	1	2	3	0	0	5	0	4	0	0	4	0	1	0	0	1	11
5:30 AM	0	0	1	0	1	1	0	0	0	1	0	0	0	0	0	0	2	0	0	2	4
5:45 AM	1	0	3	0	4	1	3	0	0	4	0	0	0	0	0	0	1	0	0	1	9
Hourly Total	3	0	6	0	9	5	6	0	0	11	0	4	0	0	4	0	5	1	0	6	30
6:00 AM	1	2	0	0	3	4	2	0	0	6	1	0	2	0	3	0	4	1	0	5	17
6:15 AM	0	1	3	0	4	3	3	0	0	6	0	5	0	0	5	0	3	0	0	3	18
6:30 AM	2	1	5	0	8	8	4	0	0	12	1	10	2	0	13	2	2	2	0	6	39
6:45 AM	6	7	3	0	16	8	8	3	1	20	2	7	4	0	13	0	8	5	0	13	62
Hourly Total	9	11	11	0	31	23	17	3	1	44	4	22	8	0	34	2	17	8	0	27	136
7:00 AM	7	4	6	0	17	8	11	2	0	21	2	6	1	0	9	0	2	2	0	4	51
7:15 AM	2	7	5	0	14	6	9	4	0	19	2	6	6	0	14	2	10	4	0	16	63
7:30 AM	6	5	7	0	18	15	19	4	0	38	3	11	3	0	17	2	10	8	0	20	93
7:45 AM	9	7	5	0	21	14	23	1	0	38	1	19	1	0	21	1	9	9	0	19	99
Hourly Total	24	23	23	0	70	43	62	11	0	116	8	42	11	0	61	5	31	23	0	59	306
8:00 AM	7	11	10	0	28	12	12	1	0	25	1	22	5	0	28	1	10	7	0	18	99
8:15 AM	5	14	7	0	26	14	14	4	0	32	2	20	2	0	24	6	11	9	0	26	108
8:30 AM	15	7	5	0	27	13	17	6	0	36	4	21	3	0	28	4	17	11	0	32	123
8:45 AM	9	16	7	0	32	12	12	6	0	30	3	17	2	0	22	5	7	13	0	25	109

Hourly Total	36	48	29	0	113	51	55	17	0	123	10	80	12	0	102	16	45	40	0	101	439
9:00 AM	3	10	5	0	18	18	17	6	0	41	5	13	1	0	19	3	6	7	0	16	94
9:15 AM	13	12	3	0	28	10	12	3	0	25	1	12	1	0	14	2	11	13	0	26	93
9:30 AM	5	7	5	0	17	13	7	2	0	22	1	11	3	0	15	1	11	8	0	20	74
9:45 AM	9	13	6	0	28	5	8	2	0	15	3	8	0	0	11	0	8	9	0	17	71
Hourly Total	30	42	19	0	91	46	44	13	0	103	10	44	5	0	59	6	36	37	0	79	332
10:00 AM	12	12	8	0	32	14	7	1	0	22	2	14	2	0	18	2	2	13	0	17	89
10:15 AM	8	8	9	0	25	14	9	2	0	25	3	9	1	0	13	4	8	9	0	21	84
10:30 AM	11	8	2	0	21	7	9	5	0	21	0	11	1	0	12	4	10	11	0	25	79
10:45 AM	5	17	10	0	32	11	10	2	0	23	1	11	3	0	15	1	8	4	0	13	83
Hourly Total	36	45	29	0	110	46	35	10	0	91	6	45	7	0	58	11	28	37	0	76	335
11:00 AM	10	9	5	0	24	8	9	3	0	20	4	17	2	0	23	0	9	3	0	12	79
11:15 AM	10	11	5	0	26	12	12	1	0	25	2	8	2	0	12	2	10	4	0	16	79
11:30 AM	11	11	4	0	26	12	17	3	0	32	3	15	0	0	18	2	7	9	0	18	94
11:45 AM	3	11	9	0	23	12	14	3	0	29	3	10	5	0	18	4	5	5	0	14	84
Hourly Total	34	42	23	0	99	44	52	10	0	106	12	50	9	0	71	8	31	21	0	60	336
12:00 PM	11	10	9	0	30	13	14	5	0	32	0	15	1	0	16	1	11	8	0	20	98
12:15 PM	8	9	8	0	25	16	17	6	0	39	3	7	0	0	10	0	7	8	0	15	89
12:30 PM	12	18	8	0	38	14	17	1	0	32	4	13	1	0	18	1	9	9	0	19	107
12:45 PM	11	8	18	0	37	19	13	8	0	40	1	11	0	0	12	0	14	13	0	27	116
Hourly Total	42	45	43	0	130	62	61	20	0	143	8	46	2	0	56	2	41	38	0	81	410
1:00 PM	8	19	7	0	34	11	17	1	0	29	4	18	2	0	24	1	24	14	0	39	126
1:15 PM	6	16	4	0	26	10	13	2	0	25	2	18	0	0	20	4	8	8	0	20	91
1:30 PM	10	13	5	0	28	12	13	4	1	30	2	16	3	0	21	3	4	7	0	14	93
1:45 PM	6	9	8	0	23	10	8	5	0	23	2	10	1	0	13	3	9	7	0	19	78
Hourly Total	30	57	24	0	111	43	51	12	1	107	10	62	6	0	78	11	45	36	0	92	388
2:00 PM	16	9	12	0	37	3	13	4	0	20	2	13	1	0	16	0	11	9	0	20	93
2:15 PM	13	8	11	0	32	16	13	4	0	33	0	8	3	0	11	5	7	10	0	22	98
2:30 PM	15	7	10	0	32	4	12	4	0	20	2	14	3	0	19	0	7	7	0	14	85
2:45 PM	7	17	11	0	35	3	12	5	0	20	2	13	1	0	16	6	7	15	0	28	99
Hourly Total	51	41	44	0	136	26	50	17	0	93	6	48	8	0	62	11	32	41	0	84	375
3:00 PM	19	13	6	0	38	7	14	4	0	25	2	16	8	0	26	1	18	19	0	38	127
Grand Total	626	717	612	0	1955	778	885	216	2	1881	148	706	96	0	950	122	670	549	0	1341	6127
Approach %	32.0	36.7	31.3	0.0	-	41.4	47.0	11.5	0.1	-	15.6	74.3	10.1	0.0	-	9.1	50.0	40.9	0.0	-	-
Total %	10.2	11.7	10.0	0.0	31.9	12.7	14.4	3.5	0.0	30.7	2.4	11.5	1.6	0.0	15.5	2.0	10.9	9.0	0.0	21.9	-
Lights	615	709	604	0	1928	764	863	208	2	1837	141	695	83	0	919	105	654	542	0	1301	5985
% Lights	98.2	98.9	98.7	-	98.6	98.2	97.5	96.3	100.0	97.7	95.3	98.4	86.5	-	96.7	86.1	97.6	98.7	-	97.0	97.7
Other Vehicles	11	8	8	0	27	14	22	8	0	44	7	11	13	0	31	17	16	7	0	40	142
% Other Vehicles	1.8	1.1	1.3	-	1.4	1.8	2.5	3.7	0.0	2.3	4.7	1.6	13.5	-	3.3	13.9	2.4	1.3	-	3.0	2.3

Stantec Consulting Ltd.
300 - 1919 Rose St

Regina, Saskatchewan, Canada S4P 3P1
306 781 6400 erin.harms@stantec.com

Count Name: T18 (Grasswood Rd & Clarence Ave S)
Site Code:
Start Date: 05-17-2023

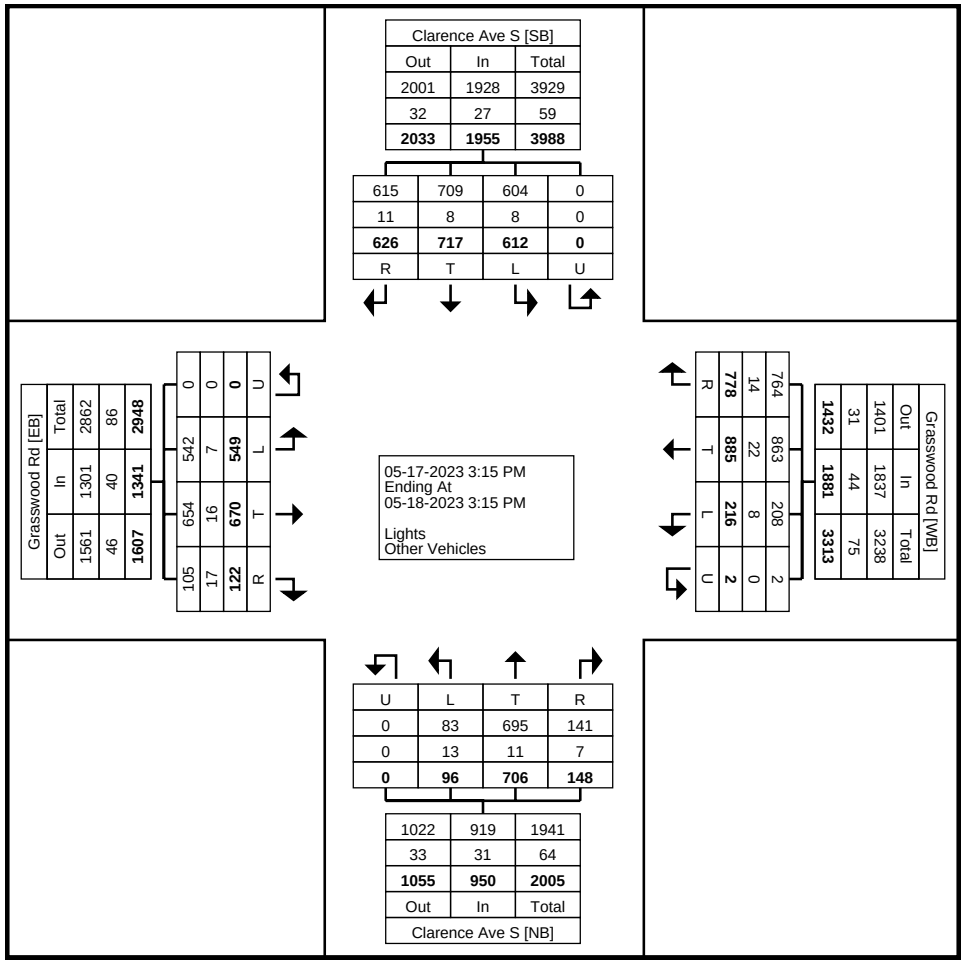

Turning Movement Data Plot

Stantec Consulting Ltd.
300 - 1919 Rose St

Regina, Saskatchewan, Canada S4P 3P1
306 781 6400 erin.harms@stantec.com

Count Name: T18 (Grasswood Rd & Clarence Ave S)
Site Code:
Start Date: 05-17-2023

Turning Movement Peak Hour Data (4:15 PM)

Start Time	Clarence Ave S Southbound					Grasswood Rd Westbound					Clarence Ave S Northbound					Grasswood Rd Eastbound					
	Right	Thru	Left	U-Turn	App. Total	Right	Thru	Left	U-Turn	App. Total	Right	Thru	Left	U-Turn	App. Total	Right	Thru	Left	U-Turn	App. Total	Int. Total
4:15 PM	12	17	21	0	50	19	20	8	0	47	4	10	2	0	16	3	17	11	0	31	144
4:30 PM	13	16	21	0	50	24	22	5	0	51	4	12	0	0	16	3	18	10	0	31	148
4:45 PM	17	22	25	0	64	26	23	2	0	51	4	12	0	0	16	3	15	13	0	31	162
5:00 PM	13	14	24	0	51	17	27	2	0	46	2	10	2	0	14	2	11	11	0	24	135
Total	55	69	91	0	215	86	92	17	0	195	14	44	4	0	62	11	61	45	0	117	589
Approach %	25.6	32.1	42.3	0.0	-	44.1	47.2	8.7	0.0	-	22.6	71.0	6.5	0.0	-	9.4	52.1	38.5	0.0	-	-
Total %	9.3	11.7	15.4	0.0	36.5	14.6	15.6	2.9	0.0	33.1	2.4	7.5	0.7	0.0	10.5	1.9	10.4	7.6	0.0	19.9	-
PHF	0.809	0.784	0.910	0.000	0.840	0.827	0.852	0.531	0.000	0.956	0.875	0.917	0.500	0.000	0.969	0.917	0.847	0.865	0.000	0.944	0.909
Lights	55	69	90	0	214	83	90	17	0	190	14	44	4	0	62	10	60	45	0	115	581
% Lights	100.0	100.0	98.9	-	99.5	96.5	97.8	100.0	-	97.4	100.0	100.0	100.0	-	100.0	90.9	98.4	100.0	-	98.3	98.6
Other Vehicles	0	0	1	0	1	3	2	0	0	5	0	0	0	0	0	1	1	0	0	2	8
% Other Vehicles	0.0	0.0	1.1	-	0.5	3.5	2.2	0.0	-	2.6	0.0	0.0	0.0	-	0.0	9.1	1.6	0.0	-	1.7	1.4

Stantec Consulting Ltd.
300 - 1919 Rose St

Regina, Saskatchewan, Canada S4P 3P1
306 781 6400 erin.harms@stantec.com

Count Name: T18 (Grasswood Rd & Clarence Ave S)
Site Code:
Start Date: 05-17-2023

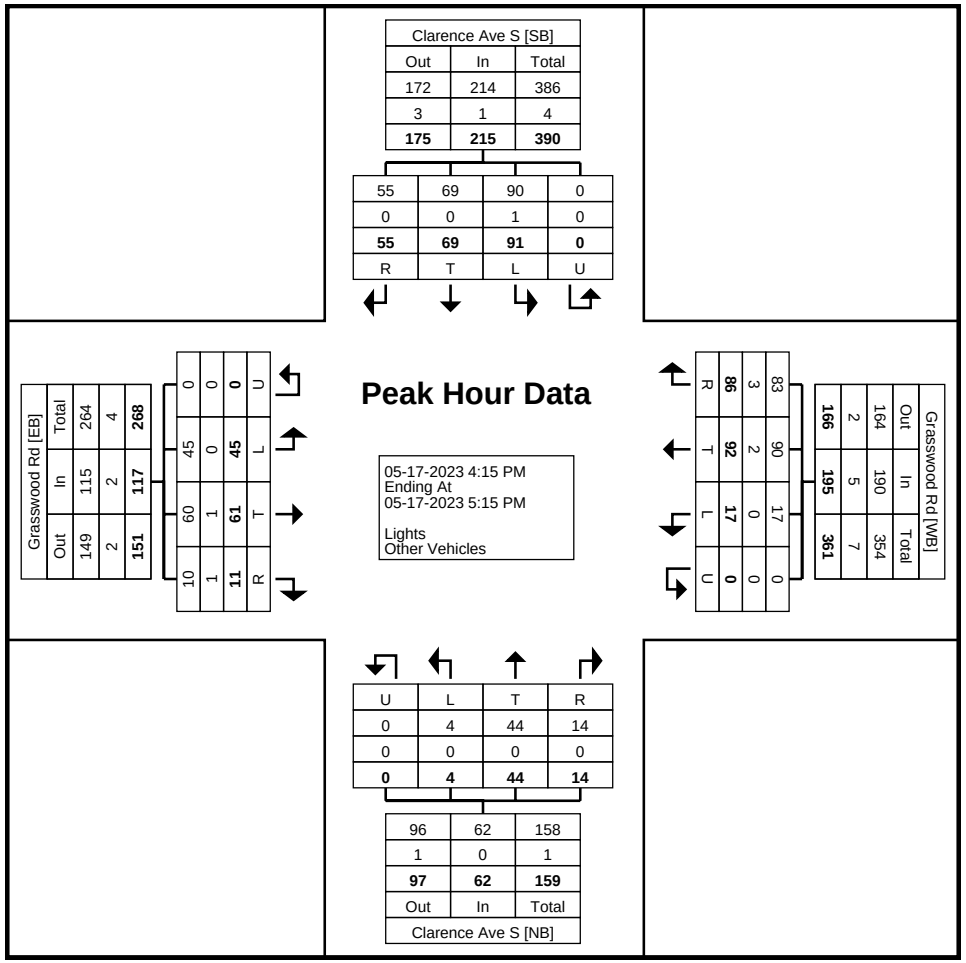

Turning Movement Peak Hour Data Plot (4:15 PM)

Stantec Consulting Ltd.
300 - 1919 Rose St

Regina, Saskatchewan, Canada S4P 3P1
306 781 6400 erin.harms@stantec.com

Count Name: T18 (Grasswood Rd & Clarence Ave S)
Site Code:
Start Date: 05-17-2023

Turning Movement Peak Hour Data (8:00 AM)

Start Time	Clarence Ave S Southbound					Grasswood Rd Westbound					Clarence Ave S Northbound					Grasswood Rd Eastbound					
	Right	Thru	Left	U-Turn	App. Total	Right	Thru	Left	U-Turn	App. Total	Right	Thru	Left	U-Turn	App. Total	Right	Thru	Left	U-Turn	App. Total	Int. Total
8:00 AM	7	11	10	0	28	12	12	1	0	25	1	22	5	0	28	1	10	7	0	18	99
8:15 AM	5	14	7	0	26	14	14	4	0	32	2	20	2	0	24	6	11	9	0	26	108
8:30 AM	15	7	5	0	27	13	17	6	0	36	4	21	3	0	28	4	17	11	0	32	123
8:45 AM	9	16	7	0	32	12	12	6	0	30	3	17	2	0	22	5	7	13	0	25	109
Total	36	48	29	0	113	51	55	17	0	123	10	80	12	0	102	16	45	40	0	101	439
Approach %	31.9	42.5	25.7	0.0	-	41.5	44.7	13.8	0.0	-	9.8	78.4	11.8	0.0	-	15.8	44.6	39.6	0.0	-	-
Total %	8.2	10.9	6.6	0.0	25.7	11.6	12.5	3.9	0.0	28.0	2.3	18.2	2.7	0.0	23.2	3.6	10.3	9.1	0.0	23.0	-
PHF	0.600	0.750	0.725	0.000	0.883	0.911	0.809	0.708	0.000	0.854	0.625	0.909	0.600	0.000	0.911	0.667	0.662	0.769	0.000	0.789	0.892
Lights	36	47	28	0	111	49	53	17	0	119	10	74	8	0	92	14	43	38	0	95	417
% Lights	100.0	97.9	96.6	-	98.2	96.1	96.4	100.0	-	96.7	100.0	92.5	66.7	-	90.2	87.5	95.6	95.0	-	94.1	95.0
Other Vehicles	0	1	1	0	2	2	2	0	0	4	0	6	4	0	10	2	2	2	0	6	22
% Other Vehicles	0.0	2.1	3.4	-	1.8	3.9	3.6	0.0	-	3.3	0.0	7.5	33.3	-	9.8	12.5	4.4	5.0	-	5.9	5.0

Stantec Consulting Ltd.
300 - 1919 Rose St

Regina, Saskatchewan, Canada S4P 3P1
306 781 6400 erin.harms@stantec.com

Count Name: T18 (Grasswood Rd & Clarence Ave S)
Site Code:
Start Date: 05-17-2023

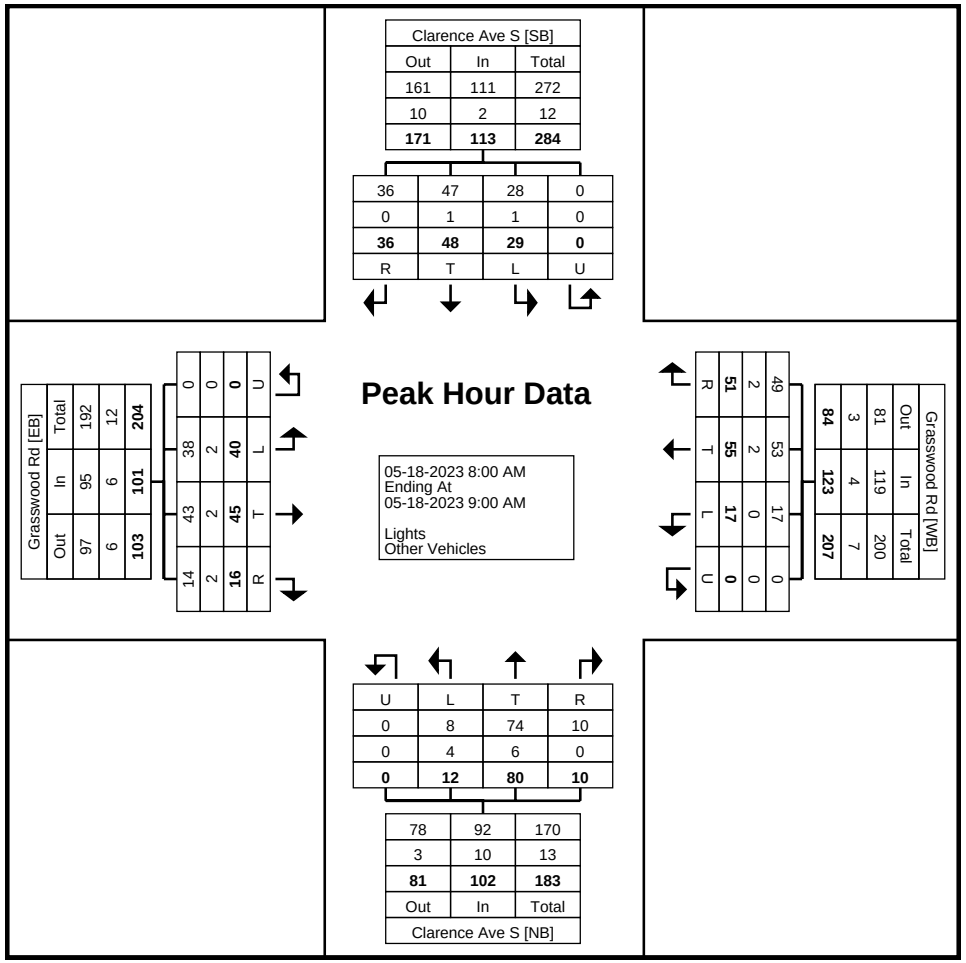

Turning Movement Peak Hour Data Plot (8:00 AM)

Stantec Consulting Ltd.
300 - 1919 Rose St

Regina, Saskatchewan, Canada S4P 3P1
306 781 6400 erin.harms@stantec.com

Count Name: T18 (Grasswood Rd & Clarence Ave S)
Site Code:
Start Date: 05-17-2023

Turning Movement Peak Hour Data (12:30 PM)

Start Time	Clarence Ave S Southbound					Grasswood Rd Westbound					Clarence Ave S Northbound					Grasswood Rd Eastbound					
	Right	Thru	Left	U-Turn	App. Total	Right	Thru	Left	U-Turn	App. Total	Right	Thru	Left	U-Turn	App. Total	Right	Thru	Left	U-Turn	App. Total	Int. Total
12:30 PM	12	18	8	0	38	14	17	1	0	32	4	13	1	0	18	1	9	9	0	19	107
12:45 PM	11	8	18	0	37	19	13	8	0	40	1	11	0	0	12	0	14	13	0	27	116
1:00 PM	8	19	7	0	34	11	17	1	0	29	4	18	2	0	24	1	24	14	0	39	126
1:15 PM	6	16	4	0	26	10	13	2	0	25	2	18	0	0	20	4	8	8	0	20	91
Total	37	61	37	0	135	54	60	12	0	126	11	60	3	0	74	6	55	44	0	105	440
Approach %	27.4	45.2	27.4	0.0	-	42.9	47.6	9.5	0.0	-	14.9	81.1	4.1	0.0	-	5.7	52.4	41.9	0.0	-	-
Total %	8.4	13.9	8.4	0.0	30.7	12.3	13.6	2.7	0.0	28.6	2.5	13.6	0.7	0.0	16.8	1.4	12.5	10.0	0.0	23.9	-
PHF	0.771	0.803	0.514	0.000	0.888	0.711	0.882	0.375	0.000	0.788	0.688	0.833	0.375	0.000	0.771	0.375	0.573	0.786	0.000	0.673	0.873
Lights	36	61	37	0	134	51	59	11	0	121	9	59	3	0	71	5	52	43	0	100	426
% Lights	97.3	100.0	100.0	-	99.3	94.4	98.3	91.7	-	96.0	81.8	98.3	100.0	-	95.9	83.3	94.5	97.7	-	95.2	96.8
Other Vehicles	1	0	0	0	1	3	1	1	0	5	2	1	0	0	3	1	3	1	0	5	14
% Other Vehicles	2.7	0.0	0.0	-	0.7	5.6	1.7	8.3	-	4.0	18.2	1.7	0.0	-	4.1	16.7	5.5	2.3	-	4.8	3.2

Stantec Consulting Ltd.
300 - 1919 Rose St

Regina, Saskatchewan, Canada S4P 3P1
306 781 6400 erin.harms@stantec.com

Count Name: T18 (Grasswood Rd & Clarence Ave S)
Site Code:
Start Date: 05-17-2023

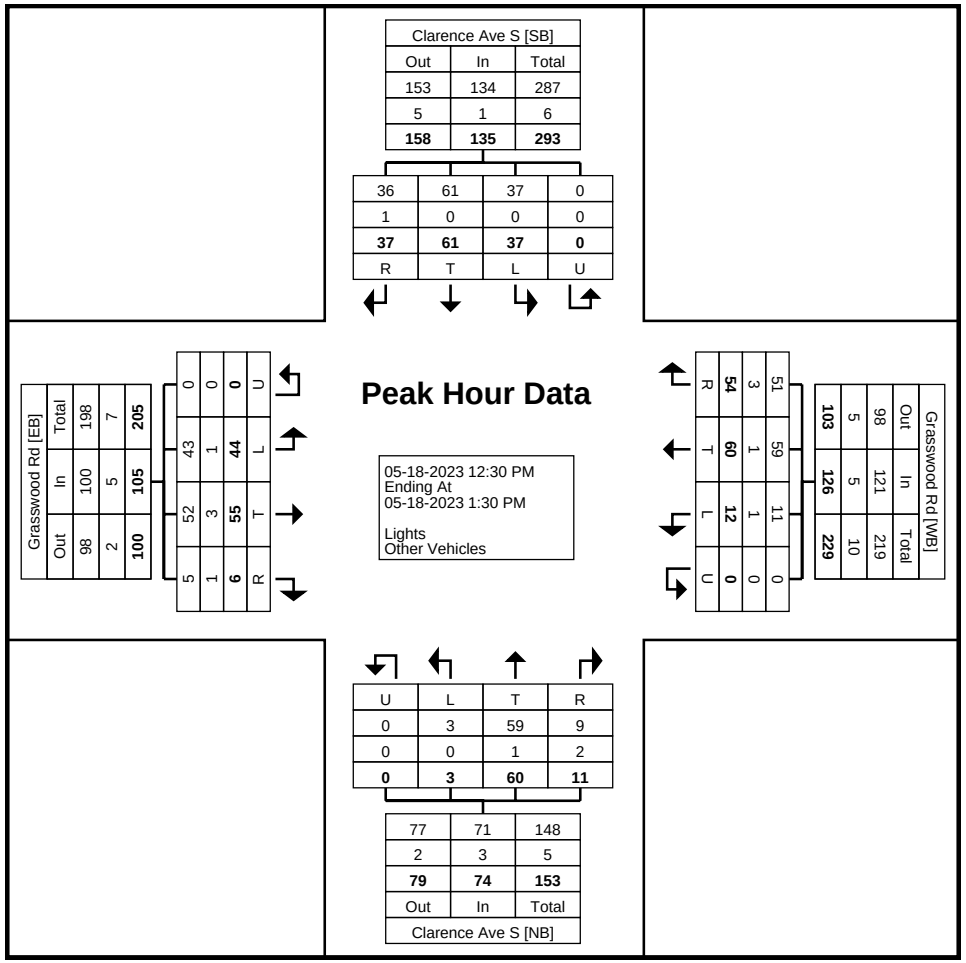

Turning Movement Peak Hour Data Plot (12:30 PM)

Stantec Consulting Ltd.
300 - 1919 Rose St

Regina, Saskatchewan, Canada S4P 3P1
306 781 6400 erin.harms@stantec.com

Count Name: T19 (Grasswood Rd & Range Rd 3055)
Site Code:
Start Date: 05-18-2023

Turning Movement Data

Start Time	Range Road 3055 Southbound					Grasswood Rd Westbound					Range Road 3055 Northbound					Grasswood Rd Eastbound					
	Right	Thru	Left	U-Turn	App. Total	Right	Thru	Left	U-Turn	App. Total	Right	Thru	Left	U-Turn	App. Total	Right	Thru	Left	U-Turn	App. Total	Int. Total
3:15 PM	0	0	0	0	0	0	15	6	0	21	3	1	0	0	4	0	6	1	0	7	32
3:30 PM	1	0	0	0	1	3	17	0	0	20	0	0	0	0	0	0	7	0	0	7	28
3:45 PM	2	1	0	0	3	1	18	4	0	23	1	0	0	0	1	0	12	2	0	14	41
Hourly Total	3	1	0	0	4	4	50	10	0	64	4	1	0	0	5	0	25	3	0	28	101
4:00 PM	1	1	0	0	2	1	16	4	0	21	2	0	0	0	2	0	11	3	0	14	39
4:15 PM	0	1	0	0	1	1	13	6	0	20	3	1	1	0	5	0	11	0	0	11	37
4:30 PM	0	0	0	0	0	0	6	5	0	11	5	0	1	0	6	0	12	1	0	13	30
4:45 PM	1	0	0	0	1	0	12	3	0	15	4	0	0	0	4	0	11	0	0	11	31
Hourly Total	2	2	0	0	4	2	47	18	0	67	14	1	2	0	17	0	45	4	0	49	137
5:00 PM	1	1	0	0	2	0	13	4	0	17	4	0	0	0	4	0	17	0	0	17	40
5:15 PM	0	0	1	0	1	0	9	8	0	17	7	0	0	0	7	0	11	0	0	11	36
5:30 PM	0	3	0	0	3	1	8	6	0	15	3	1	0	0	4	1	8	0	0	9	31
5:45 PM	0	1	0	0	1	1	9	6	0	16	2	1	0	0	3	0	10	1	0	11	31
Hourly Total	1	5	1	0	7	2	39	24	0	65	16	2	0	0	18	1	46	1	0	48	138
6:00 PM	0	1	1	0	2	0	4	1	0	5	2	0	0	0	2	0	6	1	0	7	16
6:15 PM	0	0	1	0	1	0	7	7	0	14	4	1	0	0	5	0	4	0	0	4	24
6:30 PM	0	2	0	0	2	3	1	4	0	8	4	0	0	0	4	0	8	1	0	9	23
6:45 PM	0	0	1	0	1	0	4	4	0	8	2	0	0	0	2	0	19	0	0	19	30
Hourly Total	0	3	3	0	6	3	16	16	0	35	12	1	0	0	13	0	37	2	0	39	93
7:00 PM	0	0	0	0	0	0	4	7	0	11	1	1	0	0	2	0	15	1	0	16	29
7:15 PM	1	1	0	0	2	0	1	4	0	5	2	0	0	0	2	0	6	0	0	6	15
7:30 PM	0	1	0	0	1	1	8	1	0	10	3	0	0	0	3	0	7	0	0	7	21
7:45 PM	0	1	0	0	1	0	5	1	0	6	3	2	0	0	5	0	9	0	0	9	21
Hourly Total	1	3	0	0	4	1	18	13	0	32	9	3	0	0	12	0	37	1	0	38	86
8:00 PM	0	0	1	0	1	0	5	1	0	6	4	1	0	0	5	0	13	0	0	13	25
8:15 PM	0	0	0	0	0	0	1	5	0	6	4	1	0	0	5	0	8	0	0	8	19
8:30 PM	0	0	0	0	0	0	1	1	0	2	0	1	0	0	1	0	8	0	0	8	11
8:45 PM	0	0	1	2	3	2	4	1	0	7	2	1	0	0	3	0	8	0	0	8	21
Hourly Total	0	0	2	2	4	2	11	8	0	21	10	4	0	0	14	0	37	0	0	37	76
9:00 PM	0	0	0	0	0	1	3	4	0	8	2	1	0	0	3	0	13	0	0	13	24
9:15 PM	0	0	0	0	0	0	2	1	0	3	1	0	0	0	1	0	4	0	0	4	8
9:30 PM	0	0	0	0	0	0	2	4	0	6	1	1	0	0	2	0	15	0	0	15	23
9:45 PM	0	0	0	0	0	0	0	1	0	1	0	0	0	0	0	0	6	0	0	6	7
Hourly Total	0	0	0	0	0	1	7	10	0	18	4	2	0	0	6	0	38	0	0	38	62
10:00 PM	0	0	0	0	0	0	0	2	0	2	0	0	0	0	0	0	8	0	0	8	10
10:15 PM	0	0	0	0	0	0	0	0	0	0	1	0	0	0	1	0	0	0	0	0	1

10:30 PM	0	0	0	0	0	0	0	0	0	0	1	0	0	0	1	0	0	0	0	0	1
10:45 PM	0	0	0	0	0	0	2	0	0	2	0	0	0	0	0	0	0	0	0	0	2
Hourly Total	0	0	0	0	0	0	2	2	0	4	2	0	0	0	2	0	8	0	0	8	14
11:00 PM	0	0	0	0	0	0	0	3	0	3	0	0	0	0	0	0	0	0	0	0	3
11:15 PM	0	0	0	0	0	0	0	0	0	0	0	0	0	0	0	0	1	0	0	1	1
11:30 PM	0	0	0	0	0	0	0	1	0	1	1	0	0	0	1	0	0	0	0	0	2
11:45 PM	0	0	0	0	0	0	0	0	0	0	0	0	0	0	0	0	1	0	0	1	1
Hourly Total	0	0	0	0	0	0	0	4	0	4	1	0	0	0	1	0	2	0	0	2	7
12:00 AM	0	0	0	0	0	0	0	0	0	0	0	0	0	0	0	0	0	0	0	0	0
12:15 AM	0	0	0	0	0	0	1	0	0	1	0	0	0	0	0	0	0	0	0	0	1
12:30 AM	0	0	0	0	0	0	0	0	0	0	0	0	0	0	0	0	0	0	0	0	0
12:45 AM	0	0	0	0	0	0	0	0	0	0	0	0	0	0	0	0	0	0	0	0	0
Hourly Total	0	0	0	0	0	0	1	0	0	1	0	0	0	0	0	0	0	0	0	0	1
1:00 AM	0	0	0	0	0	0	0	0	0	0	0	0	0	0	0	0	1	0	0	1	1
1:15 AM	0	0	0	0	0	0	0	0	0	0	1	0	0	0	1	0	0	0	0	0	1
1:30 AM	1	0	0	0	1	0	0	0	0	0	0	0	0	0	0	0	0	0	0	0	1
1:45 AM	0	0	0	0	0	0	0	1	0	1	1	0	0	0	1	0	0	0	0	0	2
Hourly Total	1	0	0	0	1	0	0	1	0	1	2	0	0	0	2	0	1	0	0	1	5
2:00 AM	0	0	0	0	0	0	0	0	0	0	0	0	0	0	0	0	0	0	0	0	0
2:15 AM	1	0	0	0	1	0	0	0	0	0	0	0	0	0	0	0	1	0	0	1	2
2:30 AM	0	0	0	0	0	0	0	0	0	0	0	0	0	0	0	0	0	0	0	0	0
2:45 AM	0	0	0	0	0	0	0	1	0	1	0	0	0	0	0	0	0	0	0	0	1
Hourly Total	1	0	0	0	1	0	0	1	0	1	0	0	0	0	0	0	1	0	0	1	3
3:00 AM	0	0	0	0	0	0	0	0	0	0	0	0	0	0	0	0	0	0	0	0	0
3:15 AM	0	0	0	0	0	0	0	0	0	0	0	0	0	0	0	0	0	0	0	0	0
3:30 AM	0	0	0	0	0	0	0	0	0	0	0	0	0	0	0	0	1	0	0	1	1
3:45 AM	0	0	0	0	0	0	0	0	0	0	0	0	0	0	0	0	0	0	0	0	0
Hourly Total	0	0	0	0	0	0	0	0	0	0	0	0	0	0	0	0	1	0	0	1	1
4:00 AM	0	0	0	0	0	0	0	0	0	0	0	0	0	0	0	0	0	0	0	0	0
4:15 AM	0	0	0	0	0	0	1	0	0	1	0	0	0	0	0	0	1	0	0	1	2
4:30 AM	0	0	0	0	0	0	10	0	0	10	0	0	0	0	0	0	0	0	0	0	10
4:45 AM	0	0	0	0	0	0	7	0	0	7	0	0	0	0	0	0	0	0	0	0	7
Hourly Total	0	0	0	0	0	0	18	0	0	18	0	0	0	0	0	0	1	0	0	1	19
5:00 AM	0	0	0	0	0	0	0	1	0	1	0	0	0	0	0	0	0	0	0	0	1
5:15 AM	0	0	0	0	0	0	0	0	0	0	0	0	0	0	0	0	1	0	0	1	1
5:30 AM	0	0	0	0	0	0	0	0	0	0	1	0	0	0	1	0	0	0	0	0	1
5:45 AM	0	0	0	0	0	0	4	1	0	5	0	0	0	0	0	0	0	0	0	0	5
Hourly Total	0	0	0	0	0	0	4	2	0	6	1	0	0	0	1	0	1	0	0	1	8
6:00 AM	0	0	0	0	0	0	2	0	0	2	1	0	0	0	1	0	0	0	0	0	3
6:15 AM	0	0	0	0	0	0	1	1	0	2	2	0	0	0	2	0	0	0	0	0	4
6:30 AM	0	0	0	0	0	1	10	0	0	11	4	0	0	0	4	0	2	0	0	2	17
6:45 AM	0	1	0	0	1	0	7	1	0	8	3	0	0	0	3	0	2	0	0	2	14
Hourly Total	0	1	0	0	1	1	20	2	0	23	10	0	0	0	10	0	4	0	0	4	38
7:00 AM	0	0	0	0	0	0	7	2	0	9	1	0	0	0	1	0	1	0	0	1	11
7:15 AM	0	0	0	0	0	0	8	1	0	9	2	0	0	0	2	0	0	0	0	0	11
7:30 AM	1	1	0	0	2	1	9	0	0	10	3	3	0	0	6	1	5	1	0	7	25
7:45 AM	1	0	1	0	2	0	9	1	0	10	3	0	0	0	3	0	4	1	0	5	20
Hourly Total	2	1	1	0	4	1	33	4	0	38	9	3	0	0	12	1	10	2	0	13	67
8:00 AM	1	1	2	1	5	0	6	3	0	9	7	1	0	0	8	1	11	1	0	13	35
8:15 AM	0	1	0	0	1	0	15	0	0	15	4	0	0	0	4	0	7	0	0	7	27
8:30 AM	0	0	0	0	0	0	7	0	0	7	6	0	0	0	6	0	3	0	0	3	16
8:45 AM	1	0	0	0	1	0	6	2	0	8	0	1	1	0	2	1	8	1	0	10	21

Hourly Total	2	2	2	1	7	0	34	5	0	39	17	2	1	0	20	2	29	2	0	33	99
9:00 AM	0	0	3	0	3	0	11	2	0	13	6	0	0	0	6	0	4	0	0	4	26
9:15 AM	1	0	0	0	1	0	7	1	0	8	0	0	0	0	0	1	3	0	0	4	13
9:30 AM	0	4	0	0	4	0	13	3	0	16	3	0	0	0	3	0	3	0	0	3	26
9:45 AM	1	2	0	0	3	0	12	1	0	13	4	0	0	0	4	0	4	0	0	4	24
Hourly Total	2	6	3	0	11	0	43	7	0	50	13	0	0	0	13	1	14	0	0	15	89
10:00 AM	1	0	0	0	1	0	9	4	0	13	2	0	0	0	2	0	11	1	0	12	28
10:15 AM	0	0	1	0	1	0	13	1	0	14	4	0	0	0	4	0	1	0	0	1	20
10:30 AM	1	0	0	0	1	0	10	4	0	14	0	2	0	0	2	2	7	0	0	9	26
10:45 AM	0	1	2	0	3	0	4	1	0	5	1	0	0	0	1	0	6	1	0	7	16
Hourly Total	2	1	3	0	6	0	36	10	0	46	7	2	0	0	9	2	25	2	0	29	90
11:00 AM	0	1	0	0	1	0	16	0	0	16	1	0	0	0	1	0	5	0	0	5	23
11:15 AM	0	0	1	0	1	0	6	0	0	6	2	0	0	0	2	0	6	0	0	6	15
11:30 AM	0	2	0	0	2	1	14	3	0	18	3	1	0	0	4	0	7	0	0	7	31
11:45 AM	0	0	1	0	1	1	4	2	0	7	4	2	0	0	6	0	14	1	0	15	29
Hourly Total	0	3	2	0	5	2	40	5	0	47	10	3	0	0	13	0	32	1	0	33	98
12:00 PM	1	1	1	1	4	0	12	1	0	13	3	2	0	0	5	1	2	0	0	3	25
12:15 PM	0	1	1	0	2	0	8	1	0	9	2	1	1	0	4	0	7	0	0	7	22
12:30 PM	0	1	1	0	2	0	8	5	0	13	3	0	0	0	3	0	10	0	0	10	28
12:45 PM	1	0	0	0	1	0	11	3	0	14	9	0	0	0	9	0	8	1	0	9	33
Hourly Total	2	3	3	1	9	0	39	10	0	49	17	3	1	0	21	1	27	1	0	29	108
1:00 PM	1	1	1	0	3	2	8	3	0	13	2	0	0	0	2	0	13	0	0	13	31
1:15 PM	0	1	1	0	2	0	9	5	0	14	0	0	0	0	0	0	9	1	0	10	26
1:30 PM	1	1	2	0	4	0	11	3	0	14	3	0	0	0	3	0	19	0	0	19	40
1:45 PM	0	1	0	0	1	0	9	0	0	9	3	0	0	0	3	0	14	1	0	15	28
Hourly Total	2	4	4	0	10	2	37	11	0	50	8	0	0	0	8	0	55	2	0	57	125
2:00 PM	1	0	0	0	1	0	7	6	0	13	3	2	0	0	5	0	5	0	0	5	24
2:15 PM	2	0	0	0	2	0	4	1	0	5	3	0	1	0	4	0	4	0	0	4	15
2:30 PM	0	0	0	0	0	0	5	3	0	8	5	1	1	0	7	0	13	0	0	13	28
2:45 PM	0	2	0	0	2	0	10	4	0	14	5	1	0	0	6	0	8	0	0	8	30
Hourly Total	3	2	0	0	5	0	26	14	0	40	16	4	2	0	22	0	30	0	0	30	97
3:00 PM	0	0	0	0	0	0	3	2	0	5	2	0	0	0	2	0	8	2	0	10	17
Grand Total	24	37	24	4	89	21	524	179	0	724	184	31	6	0	221	8	514	23	0	545	1579
Approach %	27.0	41.6	27.0	4.5	-	2.9	72.4	24.7	0.0	-	83.3	14.0	2.7	0.0	-	1.5	94.3	4.2	0.0	-	-
Total %	1.5	2.3	1.5	0.3	5.6	1.3	33.2	11.3	0.0	45.9	11.7	2.0	0.4	0.0	14.0	0.5	32.6	1.5	0.0	34.5	-
Lights	20	35	23	4	82	20	514	177	0	711	181	31	6	0	218	7	504	18	0	529	1540
% Lights	83.3	94.6	95.8	100.0	92.1	95.2	98.1	98.9	-	98.2	98.4	100.0	100.0	-	98.6	87.5	98.1	78.3	-	97.1	97.5
Other Vehicles	4	2	1	0	7	1	10	2	0	13	3	0	0	0	3	1	10	5	0	16	39
% Other Vehicles	16.7	5.4	4.2	0.0	7.9	4.8	1.9	1.1	-	1.8	1.6	0.0	0.0	-	1.4	12.5	1.9	21.7	-	2.9	2.5

Stantec Consulting Ltd.
300 - 1919 Rose St

Regina, Saskatchewan, Canada S4P 3P1
306 781 6400 erin.harms@stantec.com

Count Name: T19 (Grasswood Rd & Range Rd 3055)
Site Code:
Start Date: 05-18-2023

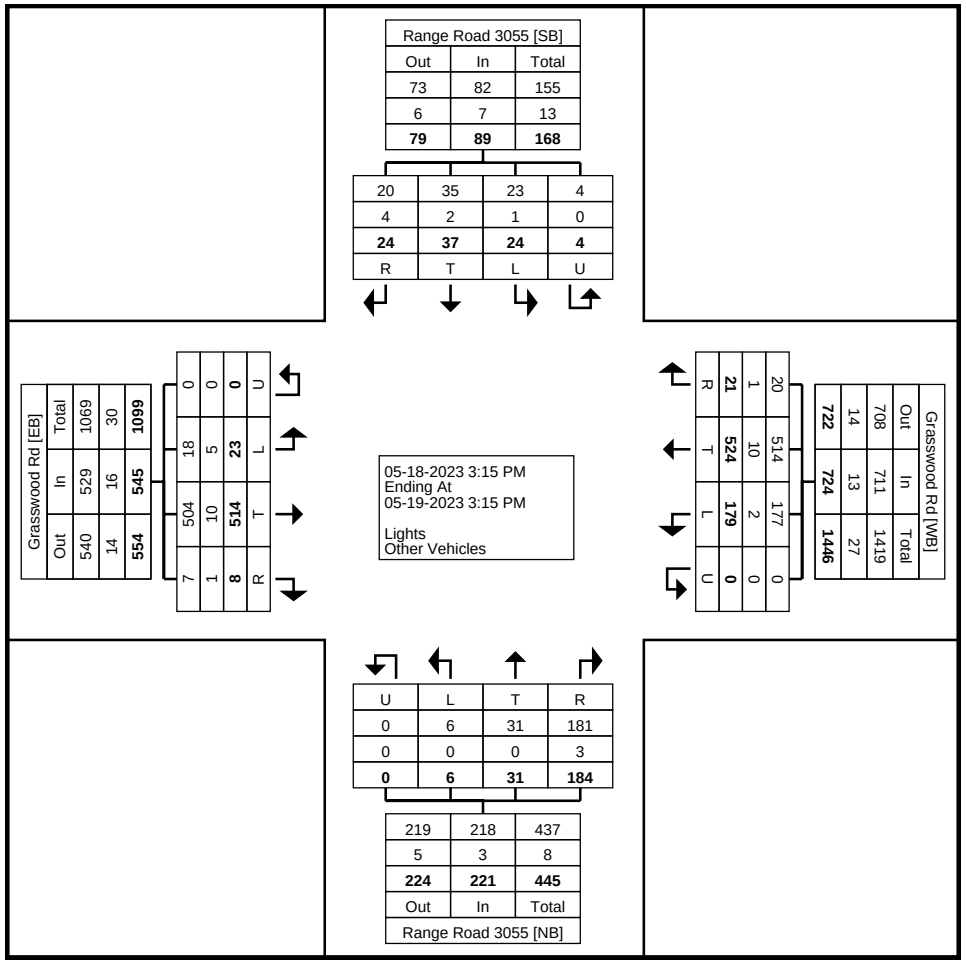

Turning Movement Data Plot

Stantec Consulting Ltd.
300 - 1919 Rose St

Regina, Saskatchewan, Canada S4P 3P1
306 781 6400 erin.harms@stantec.com

Count Name: T19 (Grasswood Rd & Range Rd 3055)
Site Code:
Start Date: 05-18-2023

Turning Movement Peak Hour Data (3:45 PM)

Start Time	Range Road 3055 Southbound					Grasswood Rd Westbound					Range Road 3055 Northbound					Grasswood Rd Eastbound					
	Right	Thru	Left	U-Turn	App. Total	Right	Thru	Left	U-Turn	App. Total	Right	Thru	Left	U-Turn	App. Total	Right	Thru	Left	U-Turn	App. Total	Int. Total
3:45 PM	2	1	0	0	3	1	18	4	0	23	1	0	0	0	1	0	12	2	0	14	41
4:00 PM	1	1	0	0	2	1	16	4	0	21	2	0	0	0	2	0	11	3	0	14	39
4:15 PM	0	1	0	0	1	1	13	6	0	20	3	1	1	0	5	0	11	0	0	11	37
4:30 PM	0	0	0	0	0	0	6	5	0	11	5	0	1	0	6	0	12	1	0	13	30
Total	3	3	0	0	6	3	53	19	0	75	11	1	2	0	14	0	46	6	0	52	147
Approach %	50.0	50.0	0.0	0.0	-	4.0	70.7	25.3	0.0	-	78.6	7.1	14.3	0.0	-	0.0	88.5	11.5	0.0	-	-
Total %	2.0	2.0	0.0	0.0	4.1	2.0	36.1	12.9	0.0	51.0	7.5	0.7	1.4	0.0	9.5	0.0	31.3	4.1	0.0	35.4	-
PHF	0.375	0.750	0.000	0.000	0.500	0.750	0.736	0.792	0.000	0.815	0.550	0.250	0.500	0.000	0.583	0.000	0.958	0.500	0.000	0.929	0.896
Lights	1	3	0	0	4	3	50	18	0	71	10	1	2	0	13	0	42	3	0	45	133
% Lights	33.3	100.0	-	-	66.7	100.0	94.3	94.7	-	94.7	90.9	100.0	100.0	-	92.9	-	91.3	50.0	-	86.5	90.5
Other Vehicles	2	0	0	0	2	0	3	1	0	4	1	0	0	0	1	0	4	3	0	7	14
% Other Vehicles	66.7	0.0	-	-	33.3	0.0	5.7	5.3	-	5.3	9.1	0.0	0.0	-	7.1	-	8.7	50.0	-	13.5	9.5

Stantec Consulting Ltd.
300 - 1919 Rose St

Regina, Saskatchewan, Canada S4P 3P1
306 781 6400 erin.harms@stantec.com

Count Name: T19 (Grasswood Rd & Range Rd 3055)
Site Code:
Start Date: 05-18-2023

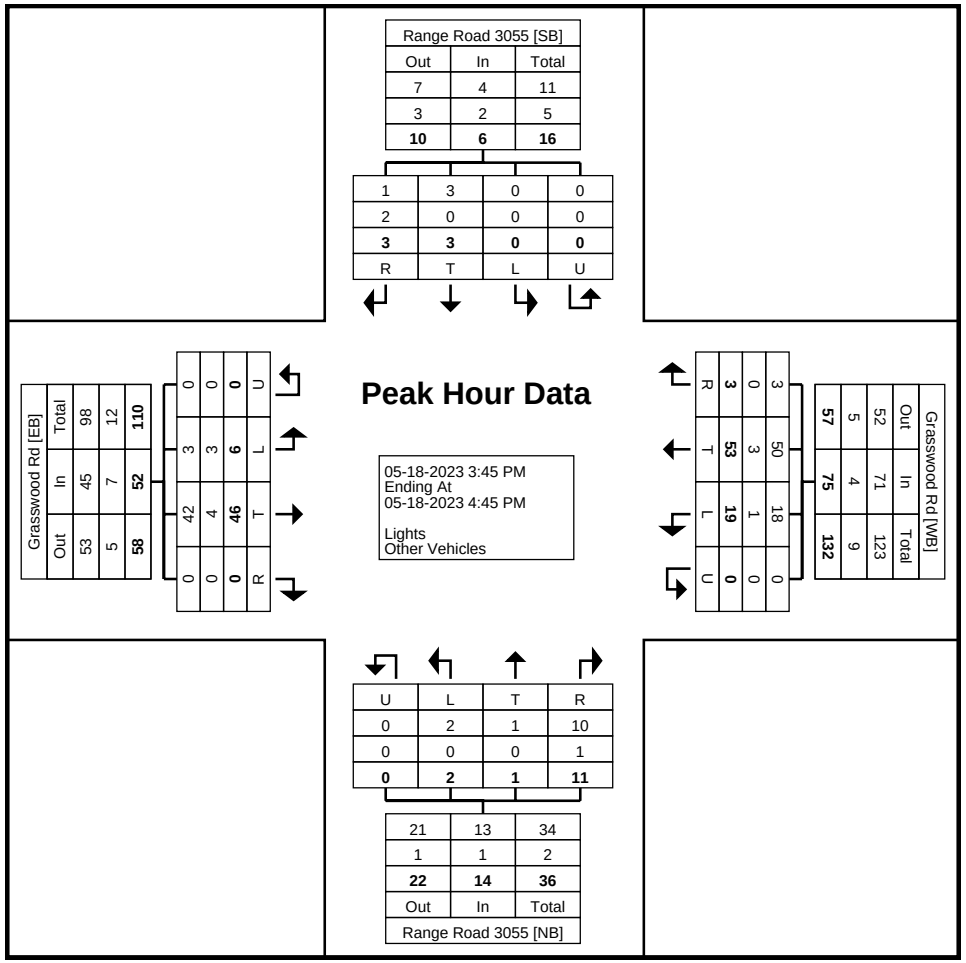

Turning Movement Peak Hour Data Plot (3:45 PM)

Stantec Consulting Ltd.
300 - 1919 Rose St

Regina, Saskatchewan, Canada S4P 3P1
306 781 6400 erin.harms@stantec.com

Count Name: T19 (Grasswood Rd & Range Rd 3055)
Site Code:
Start Date: 05-18-2023

Turning Movement Peak Hour Data (7:30 AM)

Start Time	Range Road 3055 Southbound					Grasswood Rd Westbound					Range Road 3055 Northbound					Grasswood Rd Eastbound					
	Right	Thru	Left	U-Turn	App. Total	Right	Thru	Left	U-Turn	App. Total	Right	Thru	Left	U-Turn	App. Total	Right	Thru	Left	U-Turn	App. Total	Int. Total
7:30 AM	1	1	0	0	2	1	9	0	0	10	3	3	0	0	6	1	5	1	0	7	25
7:45 AM	1	0	1	0	2	0	9	1	0	10	3	0	0	0	3	0	4	1	0	5	20
8:00 AM	1	1	2	1	5	0	6	3	0	9	7	1	0	0	8	1	11	1	0	13	35
8:15 AM	0	1	0	0	1	0	15	0	0	15	4	0	0	0	4	0	7	0	0	7	27
Total	3	3	3	1	10	1	39	4	0	44	17	4	0	0	21	2	27	3	0	32	107
Approach %	30.0	30.0	30.0	10.0	-	2.3	88.6	9.1	0.0	-	81.0	19.0	0.0	0.0	-	6.3	84.4	9.4	0.0	-	-
Total %	2.8	2.8	2.8	0.9	9.3	0.9	36.4	3.7	0.0	41.1	15.9	3.7	0.0	0.0	19.6	1.9	25.2	2.8	0.0	29.9	-
PHF	0.750	0.750	0.375	0.250	0.500	0.250	0.650	0.333	0.000	0.733	0.607	0.333	0.000	0.000	0.656	0.500	0.614	0.750	0.000	0.615	0.764
Lights	2	2	2	1	7	1	38	4	0	43	17	4	0	0	21	1	26	2	0	29	100
% Lights	66.7	66.7	66.7	100.0	70.0	100.0	97.4	100.0	-	97.7	100.0	100.0	-	-	100.0	50.0	96.3	66.7	-	90.6	93.5
Other Vehicles	1	1	1	0	3	0	1	0	0	1	0	0	0	0	0	1	1	1	0	3	7
% Other Vehicles	33.3	33.3	33.3	0.0	30.0	0.0	2.6	0.0	-	2.3	0.0	0.0	-	-	0.0	50.0	3.7	33.3	-	9.4	6.5

Stantec Consulting Ltd.
300 - 1919 Rose St

Regina, Saskatchewan, Canada S4P 3P1
306 781 6400 erin.harms@stantec.com

Count Name: T19 (Grasswood Rd & Range Rd 3055)
Site Code:
Start Date: 05-18-2023

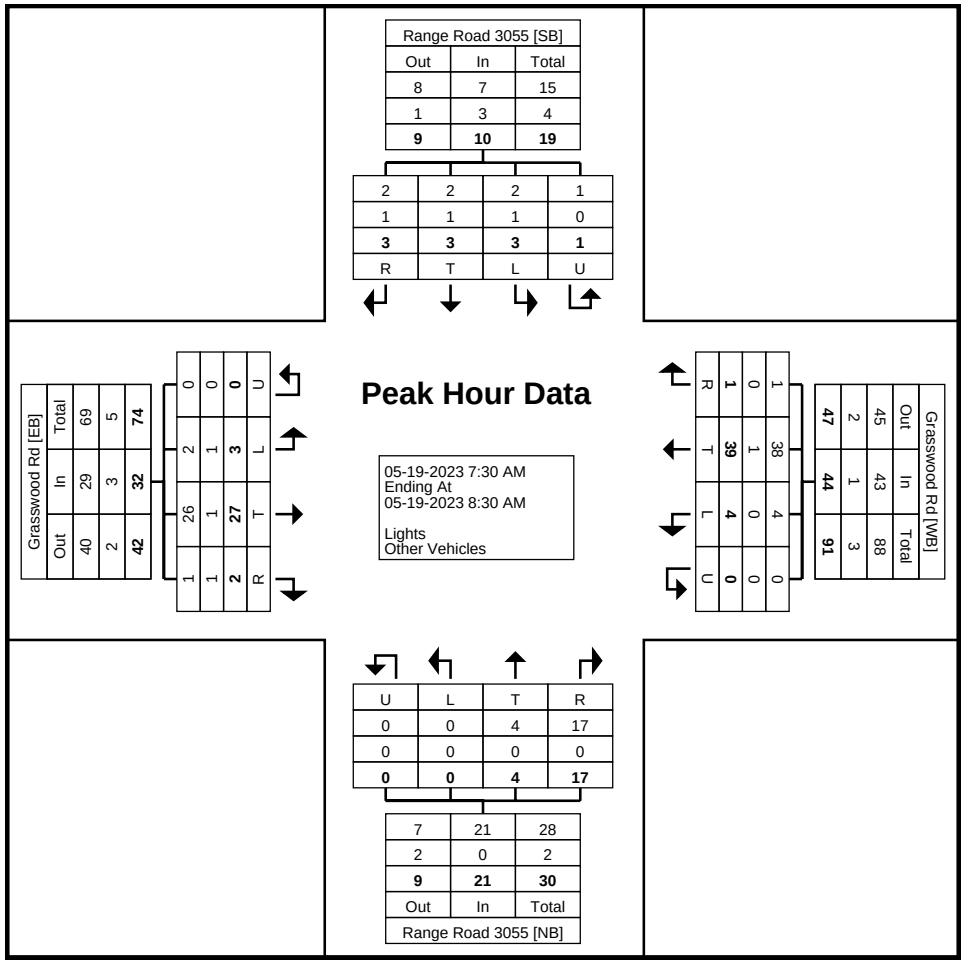

Turning Movement Peak Hour Data Plot (7:30 AM)

Stantec Consulting Ltd.
300 - 1919 Rose St

Regina, Saskatchewan, Canada S4P 3P1
306 781 6400 erin.harms@stantec.com

Count Name: T19 (Grasswood Rd & Range Rd 3055)
Site Code:
Start Date: 05-18-2023

Turning Movement Peak Hour Data (12:45 PM)

Start Time	Range Road 3055 Southbound					Grasswood Rd Westbound					Range Road 3055 Northbound					Grasswood Rd Eastbound					
	Right	Thru	Left	U-Turn	App. Total	Right	Thru	Left	U-Turn	App. Total	Right	Thru	Left	U-Turn	App. Total	Right	Thru	Left	U-Turn	App. Total	Int. Total
12:45 PM	1	0	0	0	1	0	11	3	0	14	9	0	0	0	9	0	8	1	0	9	33
1:00 PM	1	1	1	0	3	2	8	3	0	13	2	0	0	0	2	0	13	0	0	13	31
1:15 PM	0	1	1	0	2	0	9	5	0	14	0	0	0	0	0	0	9	1	0	10	26
1:30 PM	1	1	2	0	4	0	11	3	0	14	3	0	0	0	3	0	19	0	0	19	40
Total	3	3	4	0	10	2	39	14	0	55	14	0	0	0	14	0	49	2	0	51	130
Approach %	30.0	30.0	40.0	0.0	-	3.6	70.9	25.5	0.0	-	100.0	0.0	0.0	0.0	-	0.0	96.1	3.9	0.0	-	-
Total %	2.3	2.3	3.1	0.0	7.7	1.5	30.0	10.8	0.0	42.3	10.8	0.0	0.0	0.0	10.8	0.0	37.7	1.5	0.0	39.2	-
PHF	0.750	0.750	0.500	0.000	0.625	0.250	0.886	0.700	0.000	0.982	0.389	0.000	0.000	0.000	0.389	0.000	0.645	0.500	0.000	0.671	0.813
Lights	3	3	4	0	10	2	39	14	0	55	14	0	0	0	14	0	49	2	0	51	130
% Lights	100.0	100.0	100.0	-	100.0	100.0	100.0	100.0	-	100.0	100.0	-	-	-	100.0	-	100.0	100.0	-	100.0	100.0
Other Vehicles	0	0	0	0	0	0	0	0	0	0	0	0	0	0	0	0	0	0	0	0	0
% Other Vehicles	0.0	0.0	0.0	-	0.0	0.0	0.0	0.0	-	0.0	0.0	-	-	-	0.0	-	0.0	0.0	-	0.0	0.0

Stantec Consulting Ltd.
300 - 1919 Rose St

Regina, Saskatchewan, Canada S4P 3P1
306 781 6400 erin.harms@stantec.com

Count Name: T19 (Grasswood Rd & Range Rd 3055)
Site Code:
Start Date: 05-18-2023

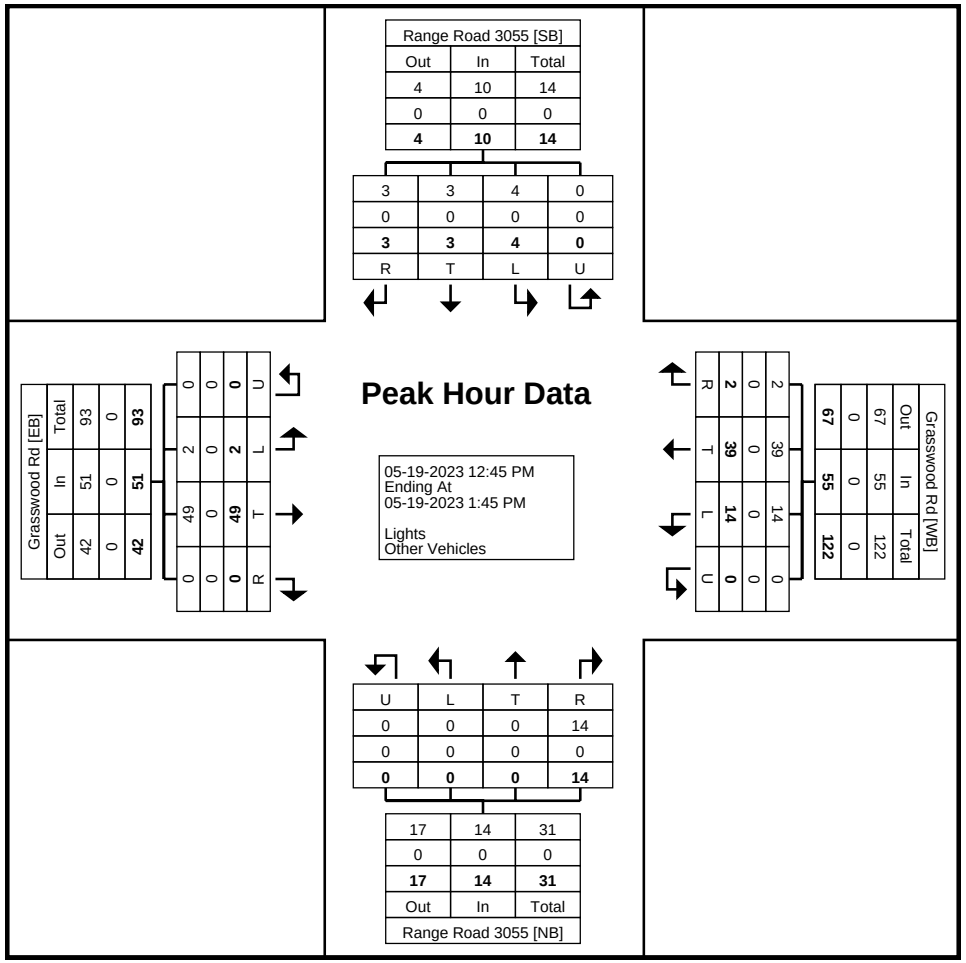

Turning Movement Peak Hour Data Plot (12:45 PM)

Stantec Consulting Ltd.
300 - 1919 Rose St

Regina, Saskatchewan, Canada S4P 3P1
306 781 6400 erin.harms@stantec.com

Count Name: T20 (Cartwright St & Range Rd 3055/Strathcona Ave)
Site Code:
Start Date: 05-18-2023
Page No: 1

Turning Movement Data

Start Time	Strathcona Ave Southbound					Cartwright St Westbound					Range Rd 3055 Northbound					Cartwright St Eastbound					
	Right	Thru	Left	U-Turn	App. Total	Right	Thru	Left	U-Turn	App. Total	Right	Thru	Left	U-Turn	App. Total	Right	Thru	Left	U-Turn	App. Total	Int. Total
4:15 PM	0	0	0	0	0	0	7	2	0	9	3	0	0	0	3	1	4	0	0	5	17
4:30 PM	0	0	0	0	0	0	6	5	0	11	1	0	1	0	2	0	7	0	0	7	20
4:45 PM	0	0	0	0	0	0	12	3	0	15	2	0	0	0	2	0	8	0	0	8	25
Hourly Total	0	0	0	0	0	0	25	10	0	35	6	0	1	0	7	1	19	0	0	20	62
5:00 PM	0	0	0	0	0	0	11	3	0	14	0	0	0	0	0	1	3	0	0	4	18
5:15 PM	0	0	0	0	0	0	6	5	0	11	2	0	0	0	2	0	7	0	0	7	20
5:30 PM	0	0	0	0	0	0	13	4	0	17	3	0	1	0	4	0	10	0	0	10	31
5:45 PM	0	0	0	0	0	0	6	3	0	9	1	0	1	0	2	0	10	0	0	10	21
Hourly Total	0	0	0	0	0	0	36	15	0	51	6	0	2	0	8	1	30	0	0	31	90
6:00 PM	0	0	0	0	0	0	4	1	0	5	4	0	0	0	4	0	15	0	0	15	24
6:15 PM	0	0	0	0	0	0	6	0	0	6	2	0	0	0	2	0	9	0	0	9	17
6:30 PM	0	0	0	0	0	0	10	5	0	15	3	0	1	0	4	0	11	0	0	11	30
6:45 PM	0	0	0	0	0	0	6	2	0	8	3	0	1	0	4	0	7	0	0	7	19
Hourly Total	0	0	0	0	0	0	26	8	0	34	12	0	2	0	14	0	42	0	0	42	90
7:00 PM	0	0	0	0	0	0	2	3	0	5	2	0	0	0	2	0	5	0	0	5	12
7:15 PM	0	0	0	0	0	0	5	3	0	8	0	0	0	0	0	0	7	0	0	7	15
7:30 PM	0	0	0	0	0	0	5	3	0	8	2	0	1	0	3	0	6	0	0	6	17
7:45 PM	0	0	0	0	0	0	8	1	0	9	2	0	0	0	2	0	3	0	0	3	14
Hourly Total	0	0	0	0	0	0	20	10	0	30	6	0	1	0	7	0	21	0	0	21	58
8:00 PM	0	0	0	0	0	0	3	0	0	3	2	0	0	0	2	0	4	0	0	4	9
8:15 PM	0	0	0	0	0	0	3	3	0	6	3	0	0	0	3	0	5	0	0	5	14
8:30 PM	0	0	0	0	0	0	2	1	0	3	0	0	0	0	0	0	7	0	0	7	10
8:45 PM	0	1	0	0	1	0	0	2	0	2	3	0	0	0	3	0	6	0	0	6	12
Hourly Total	0	1	0	0	1	0	8	6	0	14	8	0	0	0	8	0	22	0	0	22	45
9:00 PM	0	0	0	0	0	0	1	1	0	2	4	0	0	0	4	0	6	0	0	6	12
9:15 PM	0	0	0	0	0	0	1	5	0	6	1	0	0	0	1	0	2	0	0	2	9
9:30 PM	0	0	0	0	0	0	2	0	0	2	2	0	0	0	2	0	2	0	0	2	6
9:45 PM	0	0	0	0	0	0	1	0	0	1	0	0	0	0	0	0	1	0	0	1	2
Hourly Total	0	0	0	0	0	0	5	6	0	11	7	0	0	0	7	0	11	0	0	11	29
10:00 PM	0	0	0	0	0	0	0	0	0	0	0	0	0	0	0	0	1	0	0	1	1
10:15 PM	0	0	0	0	0	0	0	0	0	0	0	0	0	0	0	0	0	0	0	0	0
10:30 PM	0	0	0	0	0	0	1	0	0	1	0	0	0	0	0	0	0	0	0	0	1
10:45 PM	0	0	0	0	0	0	0	0	0	0	0	0	0	0	0	0	0	0	0	0	0
Hourly Total	0	0	0	0	0	0	1	0	0	1	0	0	0	0	0	0	1	0	0	1	2
11:00 PM	0	0	0	0	0	0	0	0	0	0	0	0	0	0	0	0	0	0	0	0	0
11:15 PM	0	0	0	0	0	0	0	0	0	0	0	0	0	0	0	0	1	0	0	1	1

11:30 PM	0	0	0	0	0	0	0	1	0	1	0	0	0	0	0	0	0	0	0	0	1
11:45 PM	0	0	0	0	0	0	1	0	0	1	0	0	0	0	0	0	0	0	0	0	1
Hourly Total	0	0	0	0	0	0	1	1	0	2	0	0	0	0	0	0	1	0	0	1	3
12:00 AM	0	0	0	0	0	0	0	0	0	0	1	0	0	0	1	2	1	0	0	3	4
12:15 AM	0	0	0	0	0	0	0	0	0	0	0	0	0	0	0	0	0	0	0	0	0
12:30 AM	0	0	0	0	0	0	0	0	0	0	0	0	0	0	0	0	0	0	0	0	0
12:45 AM	0	0	0	0	0	0	0	0	0	0	0	0	0	0	0	0	0	0	0	0	0
Hourly Total	0	0	0	0	0	0	0	0	0	0	1	0	0	0	1	2	1	0	0	3	4
1:00 AM	0	0	0	0	0	0	0	0	0	0	0	0	0	0	0	0	0	0	0	0	0
1:15 AM	0	0	0	0	0	1	1	0	0	2	0	0	0	0	0	1	0	0	0	1	3
1:30 AM	0	0	0	0	0	0	0	0	0	0	0	0	0	0	0	0	0	0	0	0	0
1:45 AM	0	0	0	0	0	0	0	0	0	0	0	0	0	0	0	0	0	0	0	0	0
Hourly Total	0	0	0	0	0	1	1	0	0	2	0	0	0	0	0	1	0	0	0	1	3
2:00 AM	0	0	0	0	0	0	0	0	0	0	0	0	1	0	1	1	0	0	0	1	2
2:15 AM	0	0	0	0	0	0	0	0	0	0	0	0	0	0	0	0	0	0	0	0	0
2:30 AM	0	0	0	0	0	0	0	0	0	0	0	0	0	0	0	0	0	0	0	0	0
2:45 AM	0	0	0	0	0	0	0	0	0	0	0	0	0	0	0	0	0	0	0	0	0
Hourly Total	0	0	0	0	0	0	0	0	0	0	0	0	1	0	1	1	0	0	0	1	2
3:00 AM	0	0	0	0	0	0	0	0	0	0	0	0	0	0	0	0	1	0	0	1	1
3:15 AM	0	0	0	0	0	0	0	0	0	0	0	0	0	0	0	0	0	0	0	0	0
3:30 AM	0	0	0	0	0	0	0	0	0	0	0	0	0	0	0	0	0	0	0	0	0
3:45 AM	0	0	0	0	0	0	0	0	0	0	0	0	0	0	0	0	0	0	0	0	0
Hourly Total	0	0	0	0	0	0	0	0	0	0	0	0	0	0	0	0	1	0	0	1	1
4:00 AM	0	0	0	0	0	0	0	0	0	0	0	0	0	0	0	0	0	0	0	0	0
4:15 AM	0	0	0	0	0	0	0	0	0	0	0	0	0	0	0	0	0	0	0	0	0
4:30 AM	0	0	0	0	0	0	0	0	0	0	0	0	0	0	0	0	0	0	0	0	0
4:45 AM	0	0	0	0	0	0	0	0	0	0	0	0	0	0	0	0	0	0	0	0	0
Hourly Total	0	0	0	0	0	0	0	0	0	0	0	0	0	0	0	0	0	0	0	0	0
5:00 AM	0	0	0	0	0	0	1	0	0	1	0	0	0	0	0	0	0	0	0	0	1
5:15 AM	0	0	0	0	0	0	2	0	0	2	0	0	0	0	0	0	0	0	0	0	2
5:30 AM	0	0	0	0	0	0	1	0	0	1	0	0	0	0	0	0	0	0	0	0	1
5:45 AM	0	0	0	0	0	0	0	0	0	0	1	0	0	0	1	0	1	0	0	1	2
Hourly Total	0	0	0	0	0	0	4	0	0	4	1	0	0	0	1	0	1	0	0	1	6
6:00 AM	0	0	0	0	0	0	2	0	0	2	0	0	0	0	0	0	3	0	0	3	5
6:15 AM	0	0	0	0	0	0	1	0	0	1	1	0	0	0	1	0	0	0	0	0	2
6:30 AM	0	0	0	0	0	0	1	0	0	1	2	0	0	0	2	0	1	0	0	1	4
6:45 AM	0	0	0	0	0	0	1	0	0	1	2	0	0	0	2	0	0	0	0	0	3
Hourly Total	0	0	0	0	0	0	5	0	0	5	5	0	0	0	5	0	4	0	0	4	14
7:00 AM	0	0	0	0	0	0	2	0	0	2	1	0	0	0	1	0	3	0	0	3	6
7:15 AM	0	0	0	0	0	0	3	1	0	4	1	0	0	0	1	0	2	0	0	2	7
7:30 AM	0	0	0	0	0	0	3	2	0	5	2	0	1	0	3	0	2	0	0	2	10
7:45 AM	0	0	0	0	0	0	7	4	0	11	4	0	1	0	5	0	3	0	0	3	19
Hourly Total	0	0	0	0	0	0	15	7	0	22	8	0	2	0	10	0	10	0	0	10	42
8:00 AM	0	0	0	0	0	1	8	4	0	13	2	0	0	0	2	0	4	0	0	4	19
8:15 AM	0	0	0	0	0	2	4	0	0	6	4	0	0	0	4	0	7	0	0	7	17
8:30 AM	0	0	0	0	0	0	6	2	0	8	1	0	0	0	1	0	5	0	0	5	14
8:45 AM	0	0	1	0	1	0	7	4	0	11	1	0	0	0	1	1	5	0	0	6	19
Hourly Total	0	0	1	0	1	3	25	10	0	38	8	0	0	0	8	1	21	0	0	22	69
9:00 AM	0	0	1	0	1	0	13	0	0	13	1	0	0	0	1	0	8	0	0	8	23
9:15 AM	0	0	0	0	0	0	3	2	1	6	1	0	0	0	1	0	5	0	0	5	12
9:30 AM	0	0	0	0	0	2	8	1	0	11	4	0	0	0	4	0	6	0	0	6	21
9:45 AM	0	0	1	0	1	0	4	1	0	5	3	0	0	0	3	0	7	0	0	7	16

Hourly Total	0	0	2	0	2	2	28	4	1	35	9	0	0	0	9	0	26	0	0	26	72
10:00 AM	0	0	1	0	1	1	5	3	0	9	0	0	1	0	1	0	9	0	0	9	20
10:15 AM	0	0	0	0	0	0	7	3	0	10	3	0	0	0	3	0	7	0	0	7	20
10:30 AM	0	0	2	0	2	2	7	1	0	10	2	0	0	0	2	0	5	0	0	5	19
10:45 AM	0	0	3	0	3	0	11	2	0	13	5	0	0	0	5	0	8	0	0	8	29
Hourly Total	0	0	6	0	6	3	30	9	0	42	10	0	1	0	11	0	29	0	0	29	88
11:00 AM	0	0	0	0	0	0	6	0	0	6	3	0	0	0	3	0	6	0	0	6	15
11:15 AM	0	0	0	0	0	0	5	2	0	7	1	0	0	0	1	0	8	0	0	8	16
11:30 AM	0	0	0	0	0	0	4	2	0	6	2	0	0	0	2	1	6	0	0	7	15
11:45 AM	0	0	0	0	0	0	2	3	0	5	7	0	1	0	8	0	6	0	0	6	19
Hourly Total	0	0	0	0	0	0	17	7	0	24	13	0	1	0	14	1	26	0	0	27	65
12:00 PM	0	0	0	0	0	0	7	3	0	10	3	0	0	0	3	1	4	0	0	5	18
12:15 PM	0	0	0	0	0	0	7	6	0	13	4	0	0	0	4	0	4	0	0	4	21
12:30 PM	0	0	0	0	0	0	6	4	0	10	0	0	0	0	0	0	5	0	0	5	15
12:45 PM	0	0	0	0	0	0	7	1	0	8	0	0	0	0	0	0	6	0	0	6	14
Hourly Total	0	0	0	0	0	0	27	14	0	41	7	0	0	0	7	1	19	0	0	20	68
1:00 PM	0	0	0	0	0	0	11	7	0	18	4	0	0	0	4	0	5	0	0	5	27
1:15 PM	0	0	0	0	0	0	9	0	0	9	2	0	0	0	2	0	7	0	0	7	18
1:30 PM	0	0	0	0	0	0	13	3	0	16	0	0	1	0	1	0	8	0	0	8	25
1:45 PM	0	0	0	0	0	0	9	2	0	11	1	0	0	0	1	0	5	0	0	5	17
Hourly Total	0	0	0	0	0	0	42	12	0	54	7	0	1	0	8	0	25	0	0	25	87
2:00 PM	0	0	0	0	0	0	6	3	0	9	3	0	1	0	4	0	5	0	0	5	18
2:15 PM	0	0	0	0	0	0	4	1	0	5	0	0	0	0	0	1	10	0	0	11	16
2:30 PM	0	0	0	0	0	0	2	0	0	2	1	0	1	0	2	0	6	1	0	7	11
2:45 PM	0	0	0	0	0	0	8	4	0	12	2	0	0	0	2	1	11	0	0	12	26
Hourly Total	0	0	0	0	0	0	20	8	0	28	6	0	2	0	8	2	32	1	0	35	71
3:00 PM	0	0	0	0	0	0	6	0	0	6	2	0	0	0	2	0	8	0	0	8	16
3:15 PM	0	0	0	0	0	0	6	6	0	12	2	0	0	0	2	0	11	0	0	11	25
3:30 PM	0	0	0	0	0	0	8	1	0	9	4	0	0	1	5	0	4	0	0	4	18
3:45 PM	0	0	0	0	0	0	5	1	0	6	3	0	0	0	3	0	8	0	0	8	17
Hourly Total	0	0	0	0	0	0	25	8	0	33	11	0	0	1	12	0	31	0	0	31	76
4:00 PM	0	0	0	0	0	0	7	0	0	7	3	0	0	0	3	0	8	0	0	8	18
Grand Total	0	1	9	0	10	9	368	135	1	513	134	0	14	1	149	11	381	1	0	393	1065
Approach %	0.0	10.0	90.0	0.0	-	1.8	71.7	26.3	0.2	-	89.9	0.0	9.4	0.7	-	2.8	96.9	0.3	0.0	-	-
Total %	0.0	0.1	0.8	0.0	0.9	0.8	34.6	12.7	0.1	48.2	12.6	0.0	1.3	0.1	14.0	1.0	35.8	0.1	0.0	36.9	-
Lights	0	1	2	0	3	3	365	131	1	500	131	0	13	1	145	10	376	1	0	387	1035
% Lights	-	100.0	22.2	-	30.0	33.3	99.2	97.0	100.0	97.5	97.8	-	92.9	100.0	97.3	90.9	98.7	100.0	-	98.5	97.2
Other Vehicles	0	0	7	0	7	6	3	4	0	13	3	0	1	0	4	1	5	0	0	6	30
% Other Vehicles	-	0.0	77.8	-	70.0	66.7	0.8	3.0	0.0	2.5	2.2	-	7.1	0.0	2.7	9.1	1.3	0.0	-	1.5	2.8

Stantec Consulting Ltd.
300 - 1919 Rose St

Regina, Saskatchewan, Canada S4P 3P1
306 781 6400 erin.harms@stantec.com

Count Name: T20 (Cartwright St & Range Rd 3055/Strathcona Ave)
Site Code:
Start Date: 05-18-2023
Page No: 4

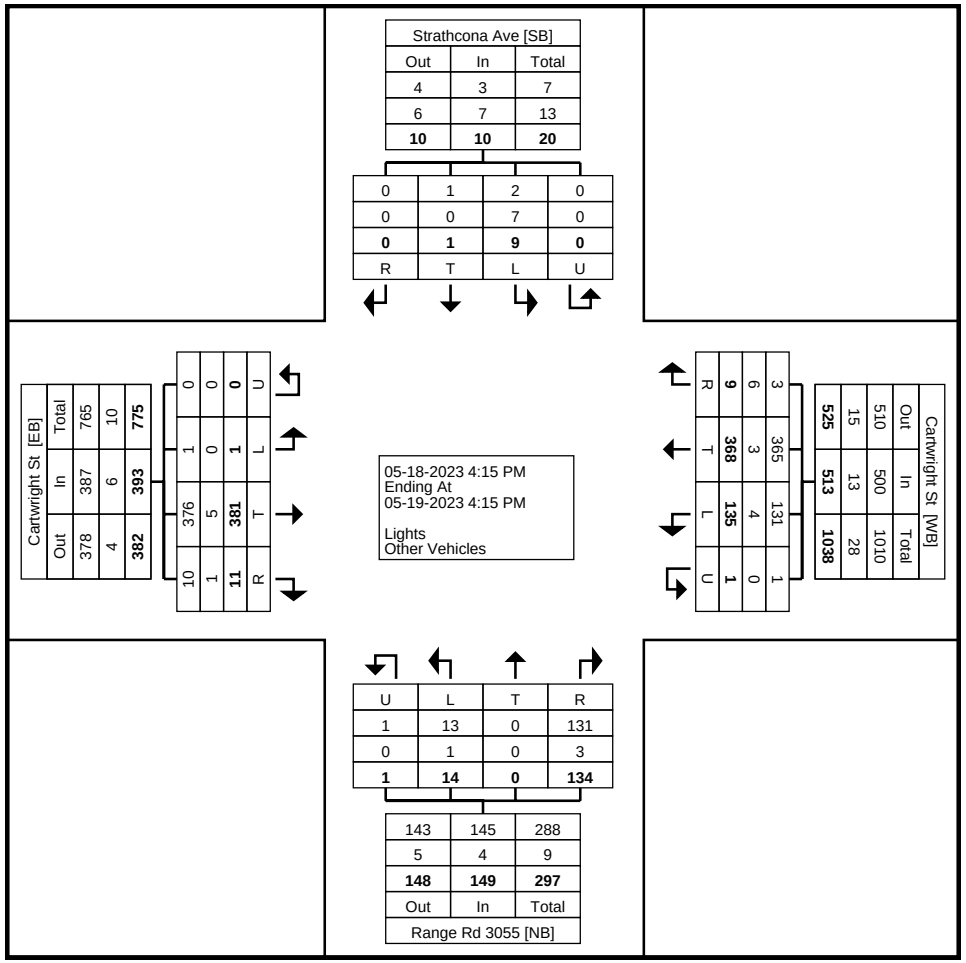

Turning Movement Data Plot

Stantec Consulting Ltd.
300 - 1919 Rose St

Regina, Saskatchewan, Canada S4P 3P1
306 781 6400 erin.harms@stantec.com

Count Name: T20 (Cartwright St & Range Rd 3055/Strathcona Ave)
Site Code:
Start Date: 05-18-2023

Turning Movement Peak Hour Data (5:15 PM)

Start Time	Strathcona Ave Southbound					Cartwright St Westbound					Range Rd 3055 Northbound					Cartwright St Eastbound					
	Right	Thru	Left	U-Turn	App. Total	Right	Thru	Left	U-Turn	App. Total	Right	Thru	Left	U-Turn	App. Total	Right	Thru	Left	U-Turn	App. Total	Int. Total
5:15 PM	0	0	0	0	0	0	6	5	0	11	2	0	0	0	2	0	7	0	0	7	20
5:30 PM	0	0	0	0	0	0	13	4	0	17	3	0	1	0	4	0	10	0	0	10	31
5:45 PM	0	0	0	0	0	0	6	3	0	9	1	0	1	0	2	0	10	0	0	10	21
6:00 PM	0	0	0	0	0	0	4	1	0	5	4	0	0	0	4	0	15	0	0	15	24
Total	0	0	0	0	0	0	29	13	0	42	10	0	2	0	12	0	42	0	0	42	96
Approach %	0.0	0.0	0.0	0.0	-	0.0	69.0	31.0	0.0	-	83.3	0.0	16.7	0.0	-	0.0	100.0	0.0	0.0	-	-
Total %	0.0	0.0	0.0	0.0	0.0	0.0	30.2	13.5	0.0	43.8	10.4	0.0	2.1	0.0	12.5	0.0	43.8	0.0	0.0	43.8	-
PHF	0.000	0.000	0.000	0.000	0.000	0.000	0.558	0.650	0.000	0.618	0.625	0.000	0.500	0.000	0.750	0.000	0.700	0.000	0.000	0.700	0.774
Lights	0	0	0	0	0	0	29	13	0	42	10	0	2	0	12	0	42	0	0	42	96
% Lights	-	-	-	-	-	-	100.0	100.0	-	100.0	100.0	-	100.0	-	100.0	-	100.0	-	-	100.0	100.0
Other Vehicles	0	0	0	0	0	0	0	0	0	0	0	0	0	0	0	0	0	0	0	0	0
% Other Vehicles	-	-	-	-	-	-	0.0	0.0	-	0.0	0.0	-	0.0	-	0.0	-	0.0	-	-	0.0	0.0

Stantec Consulting Ltd.
300 - 1919 Rose St

Regina, Saskatchewan, Canada S4P 3P1
306 781 6400 erin.harms@stantec.com

Count Name: T20 (Cartwright St & Range Rd 3055/Strathcona Ave)
Site Code:
Start Date: 05-18-2023

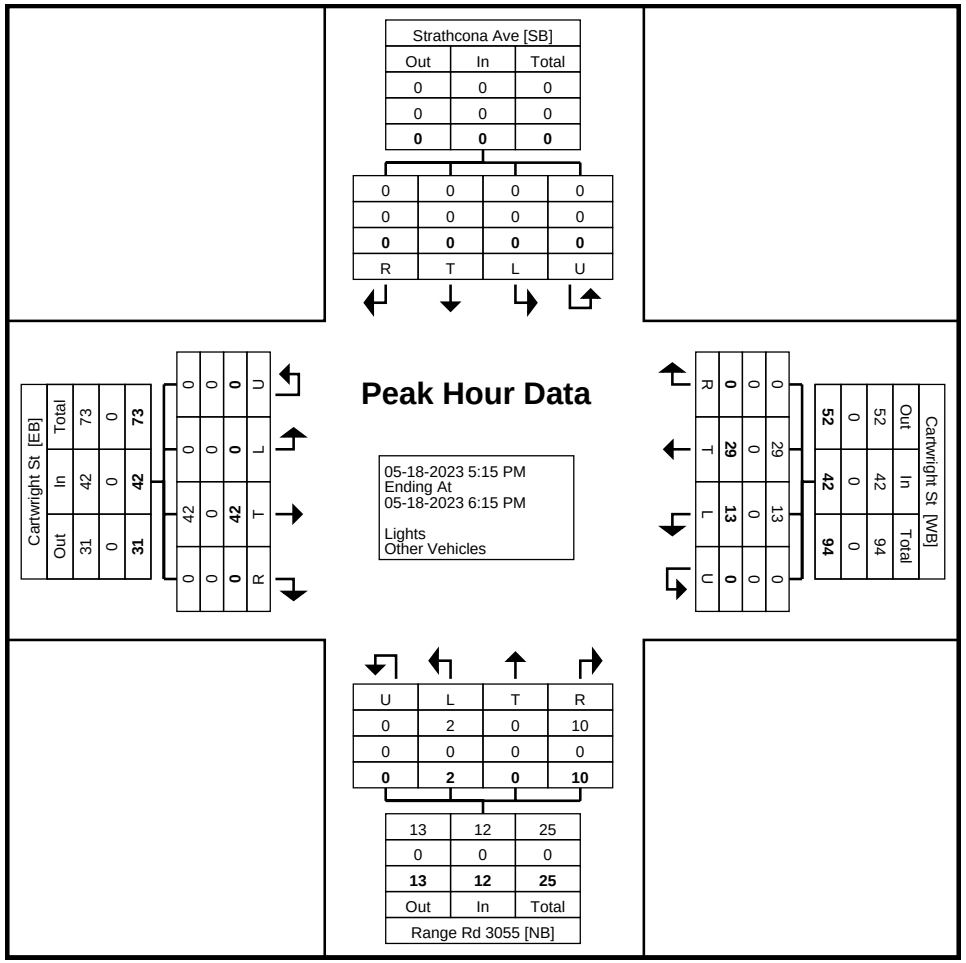

Turning Movement Peak Hour Data Plot (5:15 PM)

Stantec Consulting Ltd.
300 - 1919 Rose St

Regina, Saskatchewan, Canada S4P 3P1
306 781 6400 erin.harms@stantec.com

Count Name: T20 (Cartwright St & Range Rd 3055/Strathcona Ave)
Site Code:
Start Date: 05-18-2023

Turning Movement Peak Hour Data (10:00 AM)

Start Time	Strathcona Ave Southbound					Cartwright St Westbound					Range Rd 3055 Northbound					Cartwright St Eastbound					
	Right	Thru	Left	U-Turn	App. Total	Right	Thru	Left	U-Turn	App. Total	Right	Thru	Left	U-Turn	App. Total	Right	Thru	Left	U-Turn	App. Total	Int. Total
10:00 AM	0	0	1	0	1	1	5	3	0	9	0	0	1	0	1	0	9	0	0	9	20
10:15 AM	0	0	0	0	0	0	7	3	0	10	3	0	0	0	3	0	7	0	0	7	20
10:30 AM	0	0	2	0	2	2	7	1	0	10	2	0	0	0	2	0	5	0	0	5	19
10:45 AM	0	0	3	0	3	0	11	2	0	13	5	0	0	0	5	0	8	0	0	8	29
Total	0	0	6	0	6	3	30	9	0	42	10	0	1	0	11	0	29	0	0	29	88
Approach %	0.0	0.0	100.0	0.0	-	7.1	71.4	21.4	0.0	-	90.9	0.0	9.1	0.0	-	0.0	100.0	0.0	0.0	-	-
Total %	0.0	0.0	6.8	0.0	6.8	3.4	34.1	10.2	0.0	47.7	11.4	0.0	1.1	0.0	12.5	0.0	33.0	0.0	0.0	33.0	-
PHF	0.000	0.000	0.500	0.000	0.500	0.375	0.682	0.750	0.000	0.808	0.500	0.000	0.250	0.000	0.550	0.000	0.806	0.000	0.000	0.806	0.759
Lights	0	0	2	0	2	1	30	9	0	40	10	0	1	0	11	0	28	0	0	28	81
% Lights	-	-	33.3	-	33.3	33.3	100.0	100.0	-	95.2	100.0	-	100.0	-	100.0	-	96.6	-	-	96.6	92.0
Other Vehicles	0	0	4	0	4	2	0	0	0	2	0	0	0	0	0	0	1	0	0	1	7
% Other Vehicles	-	-	66.7	-	66.7	66.7	0.0	0.0	-	4.8	0.0	-	0.0	-	0.0	-	3.4	-	-	3.4	8.0

Stantec Consulting Ltd.
300 - 1919 Rose St

Regina, Saskatchewan, Canada S4P 3P1
306 781 6400 erin.harms@stantec.com

Count Name: T20 (Cartwright St & Range Rd 3055/Strathcona Ave)
Site Code:
Start Date: 05-18-2023

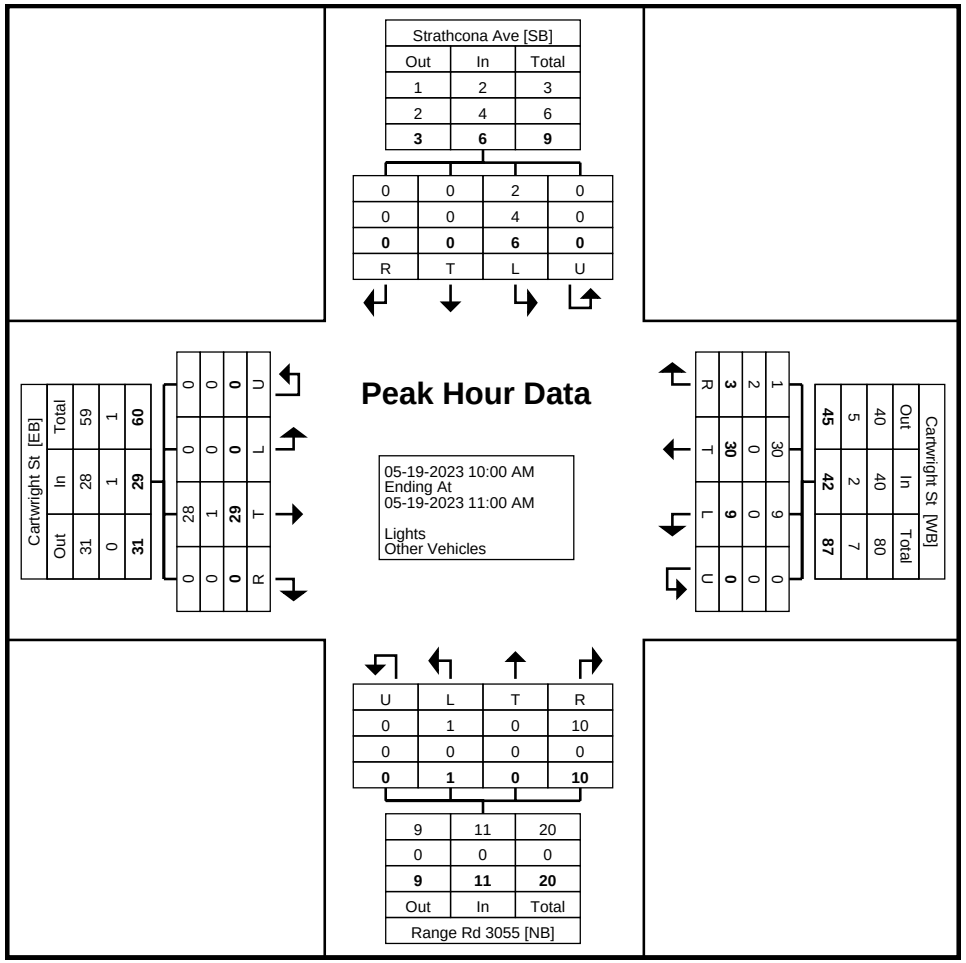

Turning Movement Peak Hour Data Plot (10:00 AM)

Stantec Consulting Ltd.
300 - 1919 Rose St

Regina, Saskatchewan, Canada S4P 3P1
306 781 6400 erin.harms@stantec.com

Count Name: T20 (Cartwright St & Range Rd 3055/Strathcona Ave)
Site Code:
Start Date: 05-18-2023

Turning Movement Peak Hour Data (1:00 PM)

Start Time	Strathcona Ave Southbound					Cartwright St Westbound					Range Rd 3055 Northbound					Cartwright St Eastbound					
	Right	Thru	Left	U-Turn	App. Total	Right	Thru	Left	U-Turn	App. Total	Right	Thru	Left	U-Turn	App. Total	Right	Thru	Left	U-Turn	App. Total	Int. Total
1:00 PM	0	0	0	0	0	0	11	7	0	18	4	0	0	0	4	0	5	0	0	5	27
1:15 PM	0	0	0	0	0	0	9	0	0	9	2	0	0	0	2	0	7	0	0	7	18
1:30 PM	0	0	0	0	0	0	13	3	0	16	0	0	1	0	1	0	8	0	0	8	25
1:45 PM	0	0	0	0	0	0	9	2	0	11	1	0	0	0	1	0	5	0	0	5	17
Total	0	0	0	0	0	0	42	12	0	54	7	0	1	0	8	0	25	0	0	25	87
Approach %	0.0	0.0	0.0	0.0	-	0.0	77.8	22.2	0.0	-	87.5	0.0	12.5	0.0	-	0.0	100.0	0.0	0.0	-	-
Total %	0.0	0.0	0.0	0.0	0.0	0.0	48.3	13.8	0.0	62.1	8.0	0.0	1.1	0.0	9.2	0.0	28.7	0.0	0.0	28.7	-
PHF	0.000	0.000	0.000	0.000	0.000	0.000	0.808	0.429	0.000	0.750	0.438	0.000	0.250	0.000	0.500	0.000	0.781	0.000	0.000	0.781	0.806
Lights	0	0	0	0	0	0	42	12	0	54	7	0	1	0	8	0	25	0	0	25	87
% Lights	-	-	-	-	-	-	100.0	100.0	-	100.0	100.0	-	100.0	-	100.0	-	100.0	-	-	100.0	100.0
Other Vehicles	0	0	0	0	0	0	0	0	0	0	0	0	0	0	0	0	0	0	0	0	0
% Other Vehicles	-	-	-	-	-	-	0.0	0.0	-	0.0	0.0	-	0.0	-	0.0	-	0.0	-	-	0.0	0.0

Stantec Consulting Ltd.
300 - 1919 Rose St

Regina, Saskatchewan, Canada S4P 3P1
306 781 6400 erin.harms@stantec.com

Count Name: T20 (Cartwright St & Range Rd 3055/Strathcona Ave)
Site Code:
Start Date: 05-18-2023

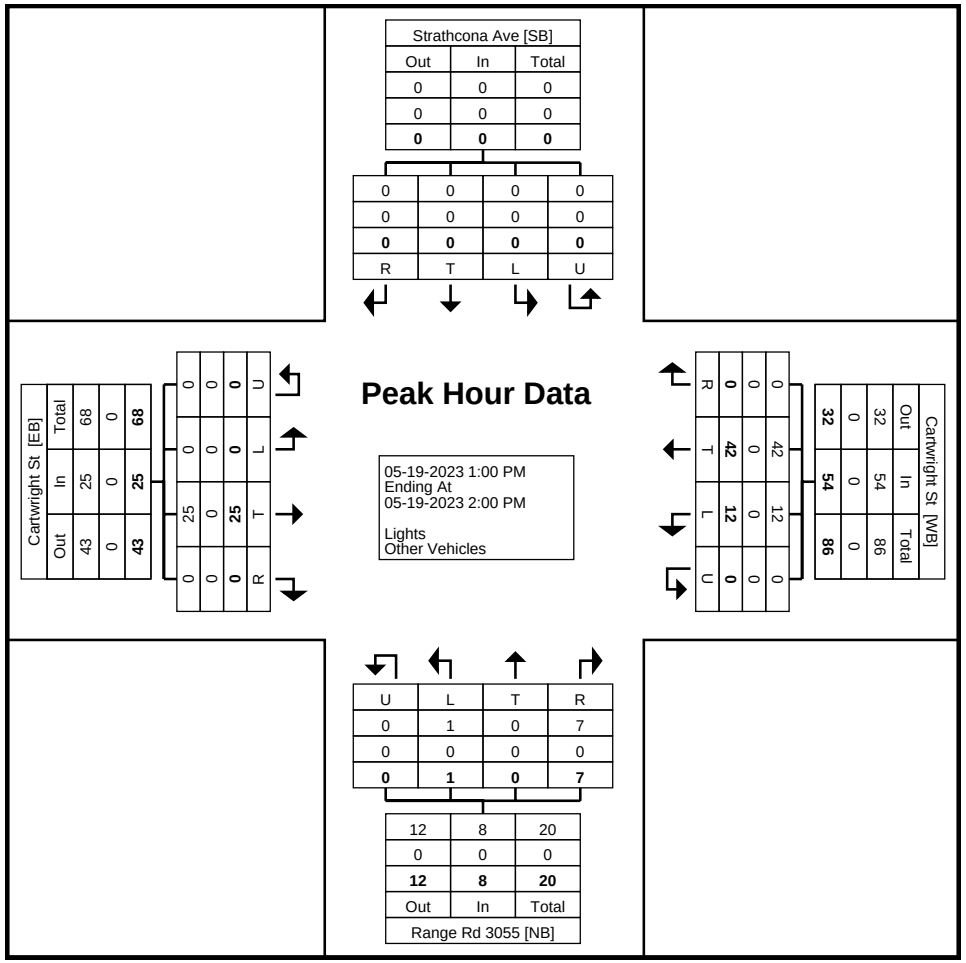

Turning Movement Peak Hour Data Plot (1:00 PM)

FIGURE 6.2 - SOUTH R.M. TRAFFIC DATA PLAN

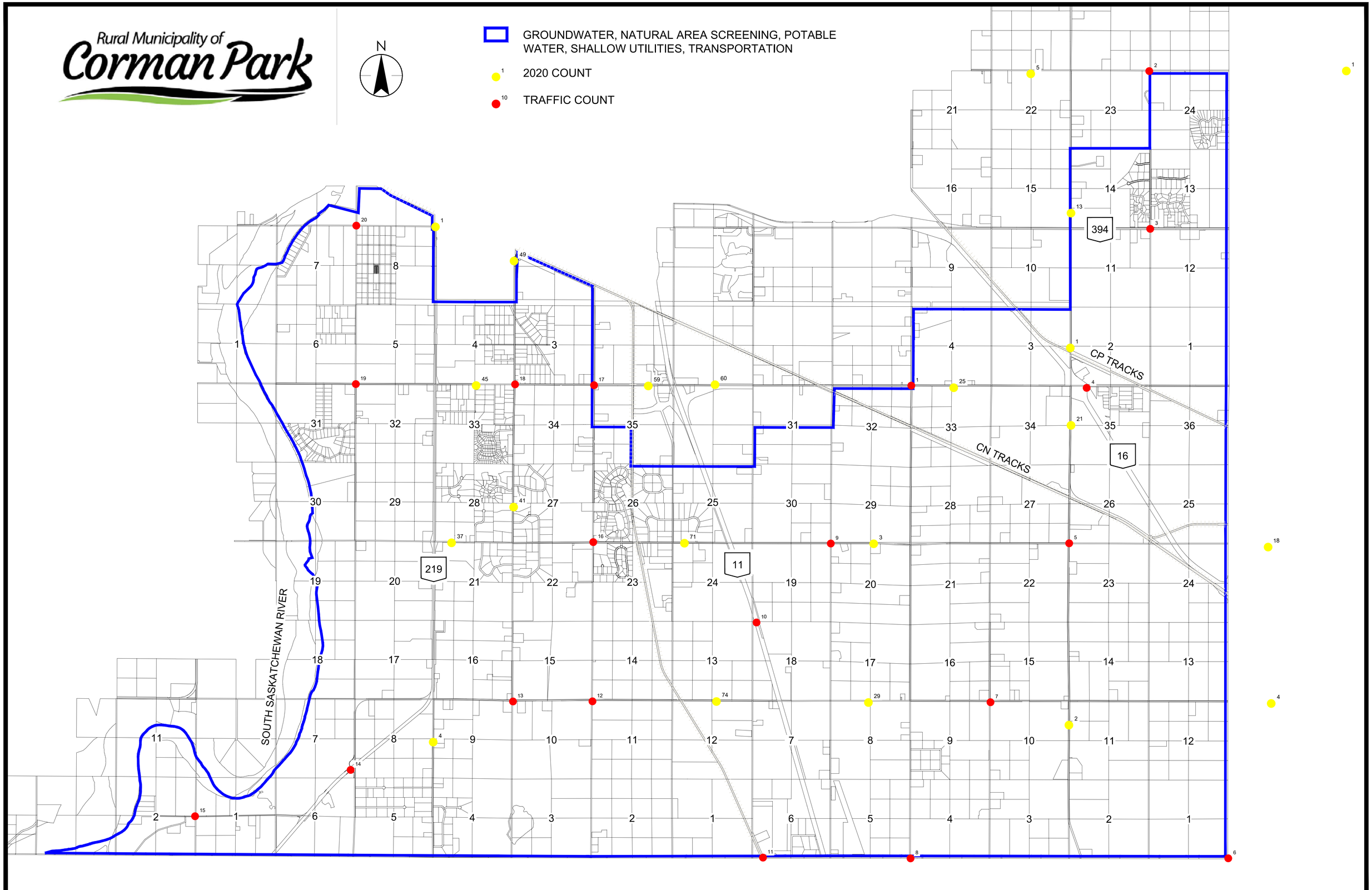

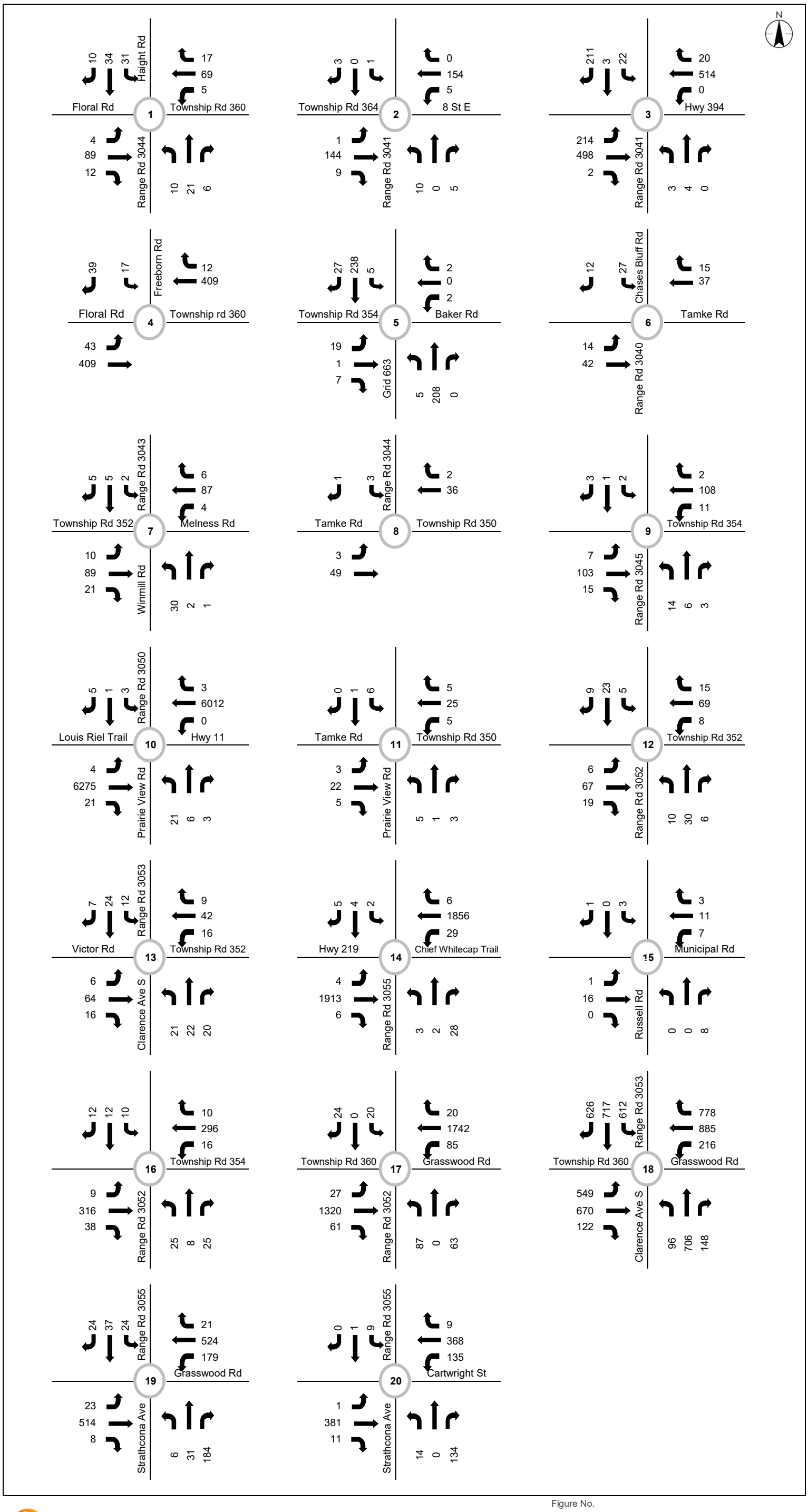

Stantec

100-75 24th St. East
Saskatoon, SK

Figure No.
7.3

Traffic Count Data

FIGURE 6.4 - SOUTH R.M. AREA TRAFFIC MAPPING PLAN

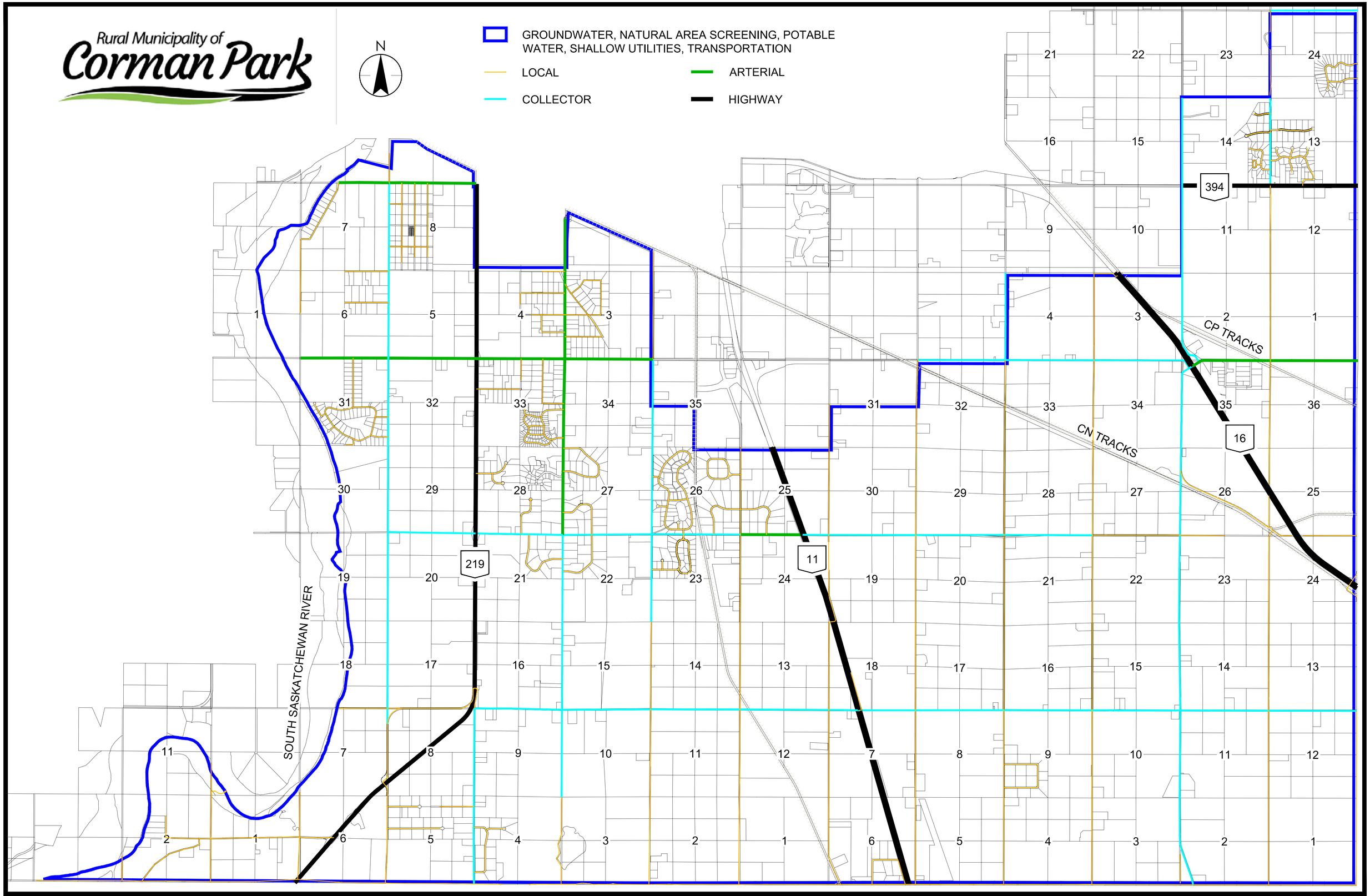

Appendix A.7

Figures for 7.0 Shallow Utilities

FIGURE 7.1 - SOUTH R.M. AREA UTILITY PLAN - SASKTEL

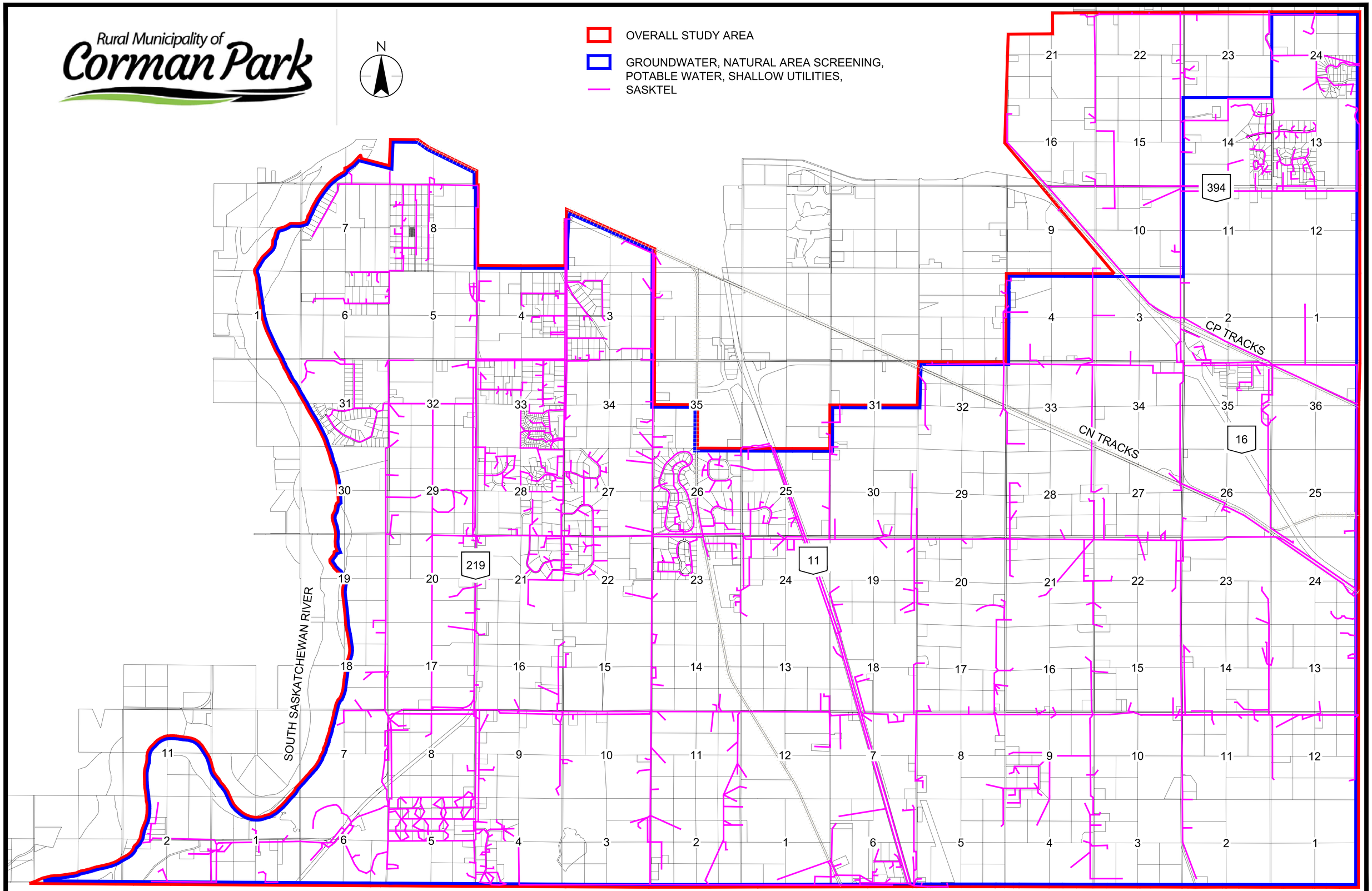

FIGURE 7.2 - SOUTH R.M. AREA UTILITY PLAN - SASKPOWER

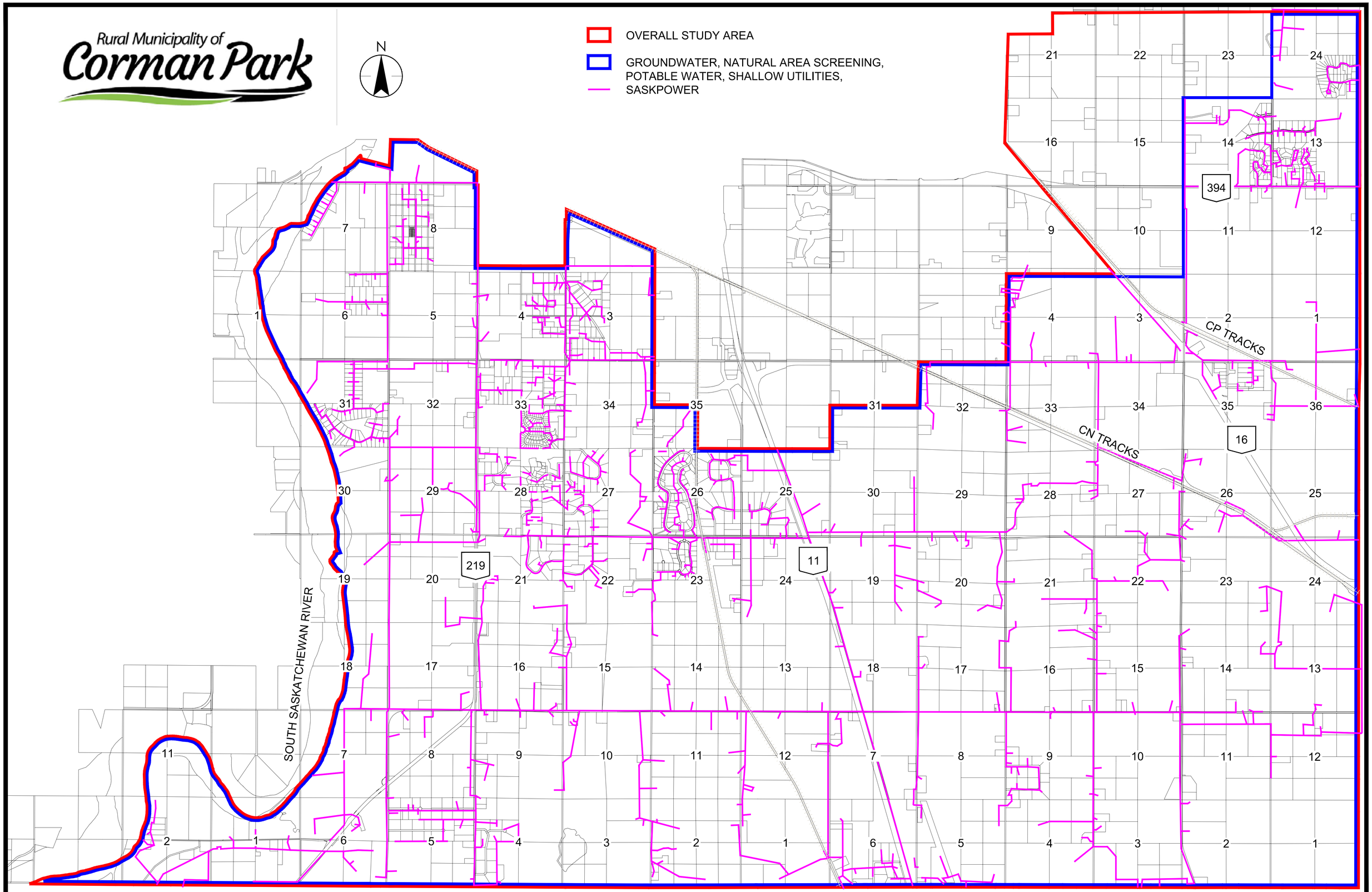

FIGURE 7.3 - SOUTH R.M. AREA UTILITY PLAN - SASKENERGY

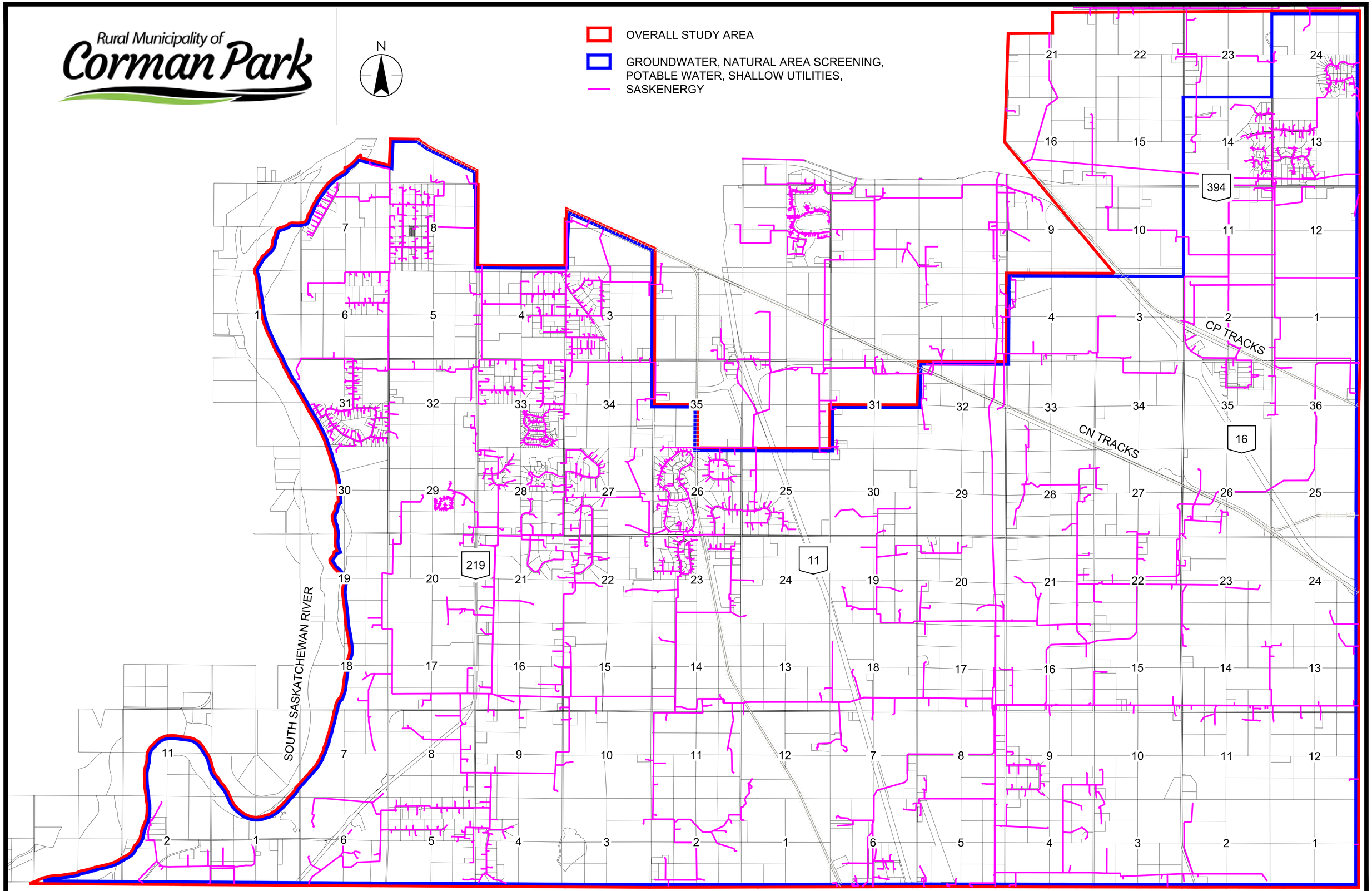
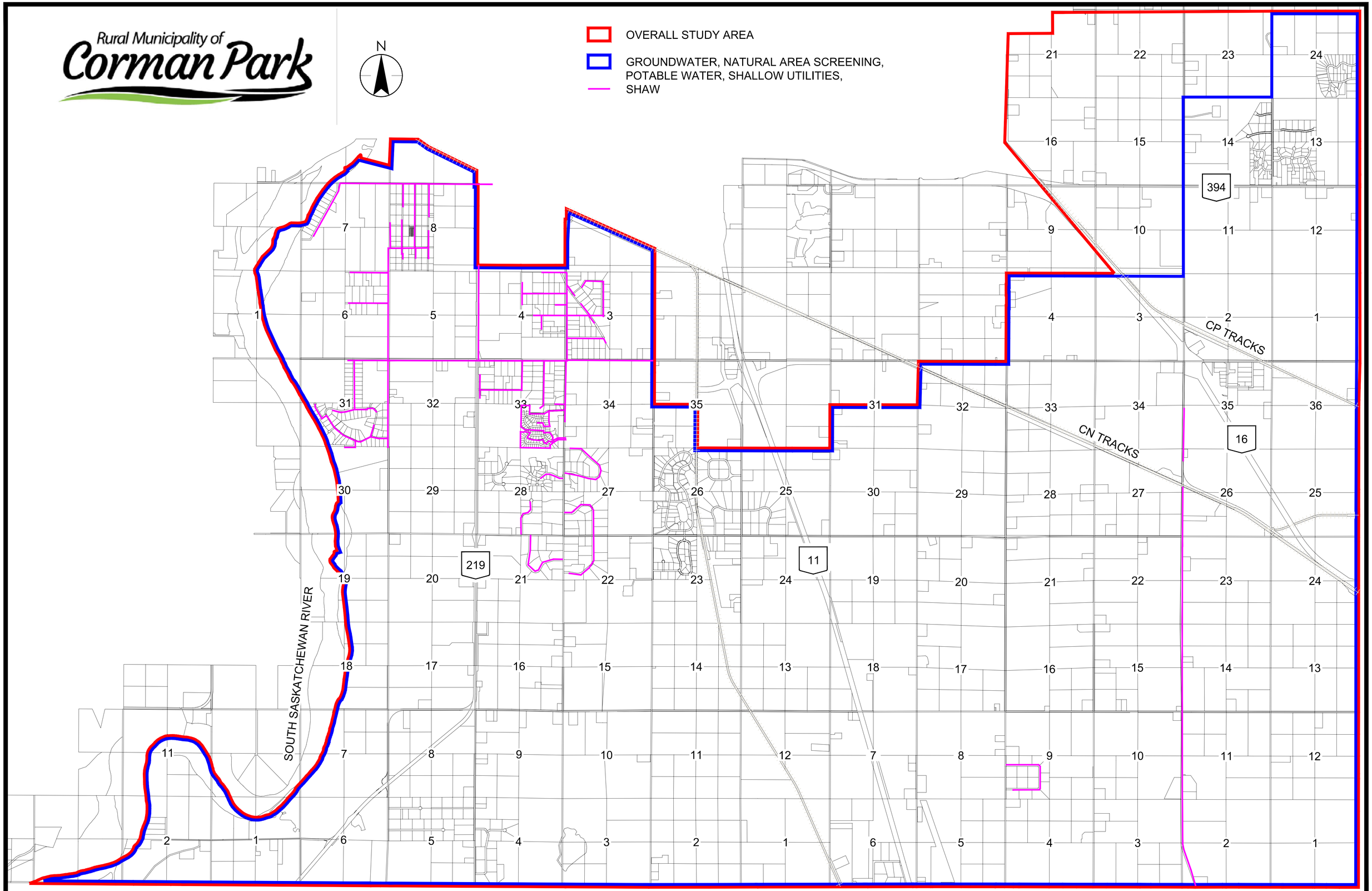
FIGURE 7.4 - SOUTH R.M. AREA UTILITY PLAN - SHAW